PLATES AND CONNECTORS FOR TIMBER

TIMBER, CONCRETE AND STEEL

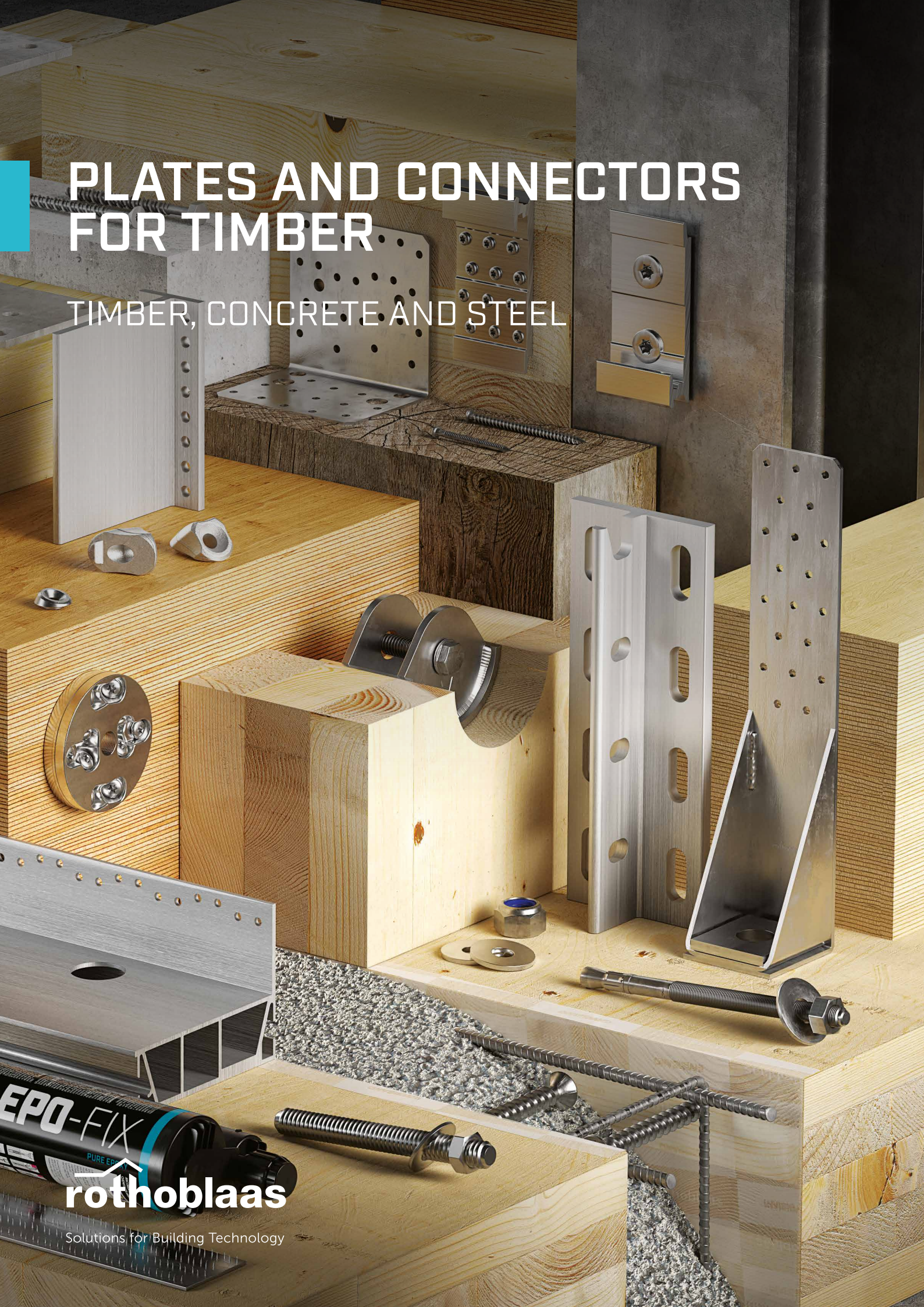

rothoblaas

Solutions for Building Technology

JOINTS FOR BEAM 11

HOOK CONNECTORS

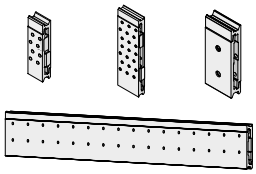

LOCK T MINI 18
LOCK T MIDI 28
LOCK C 42
LOCK FLOOR 50

DOVETAIL JOINTS

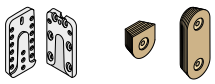

UV T 60
WOODY 66

"T" JOINTS

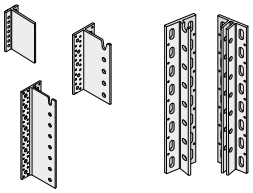

ALUMINI 72
ALUMIDI 78
ALUMAXI 88
ALUMEGA 96

ROUND CONNECTORS



DISC FLAT 114
SIMPLEX 120

METAL HANGERS

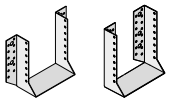

BSA 124
BSI 132

STRUCTURAL ADHESIVES



XEPOX 136

NEOPRENE SUPPORTS

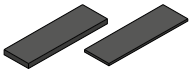

NEO 150

DOWELS, BOLTS AND RODS 153

DOWELS



SBD 154
STA 162

BOLTS, RODS, WASHERS AND NUTS

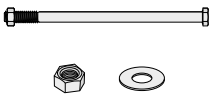

KOS 168
KOT 173
MET 174

SURFACE CONNECTORS AND BRACINGS

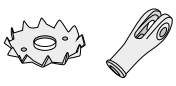

DBB 180
ZVB 182

ANGLE BRACKETS AND PLATES 187

SHEAR AND TENSILE ANGLE BRACKETS

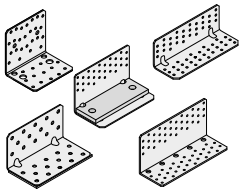

NINO 196
TITAN N 216
TITAN S 232
TITAN F 242
TITAN V 250

TENSION ANGLE-BRACKETS

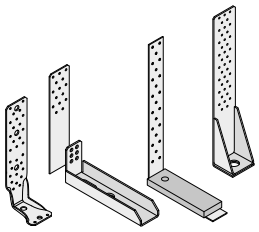

WKR 258
WKR DOUBLE 270
WHT 278
WZU 286

ANGLE BRACKETS FOR FACADES

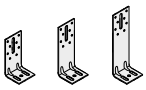

WKF 292

STANDARD ANGLE BRACKETS

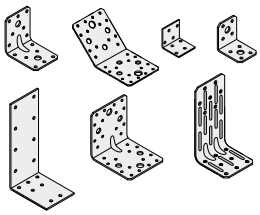

WBR | WBO | WVS | WHO 294
LOG 298
SPU 299

SHEAR PLATES

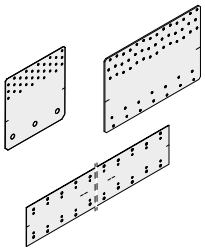

TITAN PLATE C CONCRETE 300
TITAN PLATE T TIMBER 308

PLATES FOR TENSILE STRESS

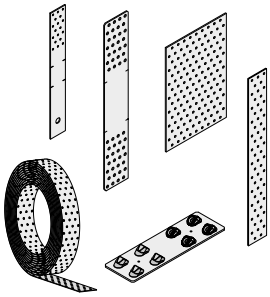

WHT PLATE C CONCRETE 316
WHT PLATE T TIMBER 324
VGU PLATE T 328
LBV 332
LBB 336

SYSTEMS FOR WALLS, FLOORS AND BUILDINGS 341

GROUND CONNECTION SYSTEMS

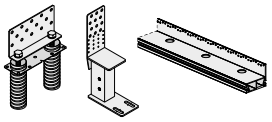

ALU START 346
TITAN DIVE 362
UP LIFT 368

PREFABRICATED SYSTEMS

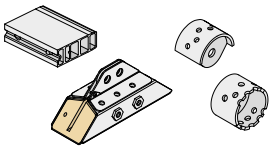

RADIAL 376
RING 388
X-RAD 390
SLOT 396

HOOKED PLATES

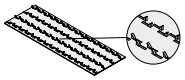

SHARP METAL 404

POST AND SLAB SYSTEMS

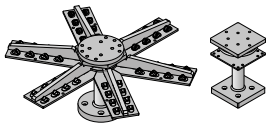

SPIDER 420
PILLAR 428
SHARP CLAMP 436

TIMBER-TO-CONCRETE HYBRID JOINTS

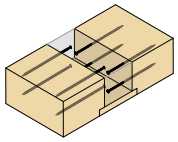

TC FUSION 440

ANCHORS FOR CONCRETE 519

SCREW-IN ANCHORS

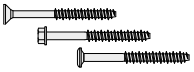

SKR EVO | SKS EVO 524
SKR | SKS | SKP 528

MECHANICAL ANCHORS

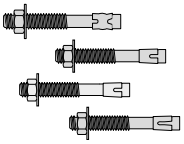

ABU 531
ABE 532
ABE A4 534
AB1 536

PLASTIC DOWELS AND SCREWS FOR DOORS AND WINDOWS

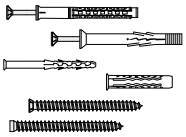

NDC 538
NDS - NDB 540
NDK - NDL 541
MBS | MBZ 542

CHEMICAL ANCHORS

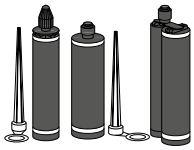

VIN-FIX 545
VIN-FIX PRO NORDIC 549
HYB-FIX 552
EPO-FIX 557

ACCESSORIES FOR CHEMICAL ANCHORS

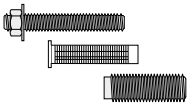

INA 562
IHP - IHM 563
IR-PLU-FILL-BRUH-DUHXA-CAT 564

JOINTS FOR COLUMNS, PERGOLAS AND FENCES 451

ADJUSTABLE POST BASES

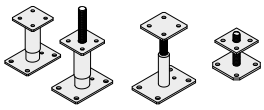

R10 - R20 454
R60 460
R40 464
R70 467

FIXED POST BASES

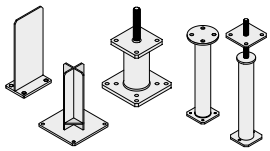

F70 468
X10 476
S50 482
P10 - P20 486

STANDARD POST BASE

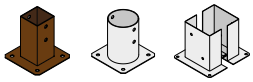

TYP F - FD - M 490

FENCES AND TERRACES

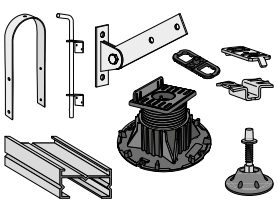

ROUND 506
BRACE 508
GATE 510
CLIP 512

WASHERS, NAILS AND SCREWS FOR PLATES 567

WASHERS FOR PLATES

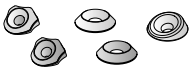

VGU 569
HUS 569

NAILS AND SCREWS FOR PLATES

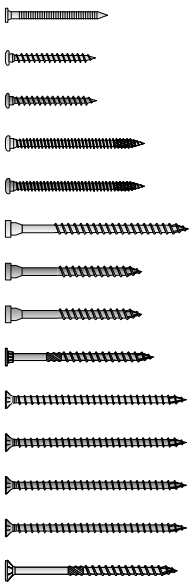

LBA 570
LBS 571
LBS EVO 571
LBS HARDWOOD 572
LBS HARDWOOD EVO 572
HBS PLATE 573
HBS PLATE EVO 573
HBS PLATE A4 574
KKF AISI410 574
VGS 575
VGS EVO 576
VGS EVO C5 576
VGS A4 577
HBS COIL 577

ENVIRONMENTAL RESPONSIBILITY

STRATEGIES TO MITIGATE THE ENVIRONMENTAL IMPACT OF OUR PRODUCTS

For more than 30 years, we have been committed to spreading more sustainable building systems, which are indispensable for achieving the Sustainable Development Goals (SDGs) adopted by the UN member states in 2015: timber is recognised as the **most environmentally sustainable** structural material, because it allows to sequester CO_2which would otherwise be released into the atmosphere.





Engineered timber (glulam, CLT, LVL, etc.) has also enabled a major step forward thanks to the development of metal connections (steel or aluminium), which are indispensable for exploiting its potential and constructing buildings comparable to those in steel or reinforced concrete. Without modern **metal connections** , it would be impossible to use timber as a substitute material for steel and reinforced concrete, hindering the ecological transition in the construction world.

PERCENTAGE INCIDENCE OF CONNECTIONS IN A TIMBER STRUCTURE

How much do connections affect the volume of structural timber in a building?

Let's take a simple but representative example: a 160 mm x 600 mm x 8 m cross-section glulam beam connected at the ends with ALUMIDI440 brackets fastened with SBD dowels and LBS screws. The volume of steel and aluminium required to make the connections is very low compared to the volume of timber used in the structure, at well under 1%.

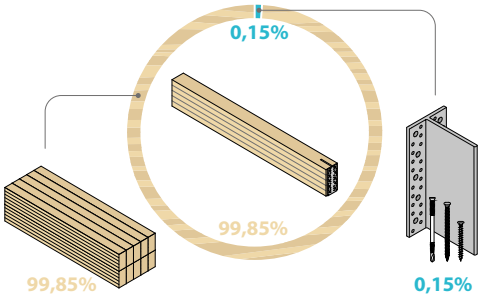

If we then consider all the materials that make up the complete building (insulation materials, finishes, furniture, etc.) the incidence of metal connections becomes negligible.

Despite this, we too play our part by adopting concrete and measurable strategies to reduce the environmental impact of our products. Let's see some of them.

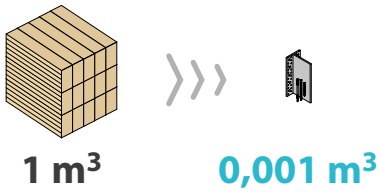

CONSCIOUS USE OF RESOURCES

ENVIRONMENTAL CERTIFICATIONS

Knowledge is the way to make informed choices. That is why we invest resources to make users aware of the environmental impact of our products. We promote their conscious use by adhering to sustainability protocols and disseminating information about environmental product performance through ecolabels, recognised and qualified databases (Sundahus, BVB, Nordic Ecolabel), environmental declarations (EPDs), emission classification systems (EMICODE®french VOC).



EPD







TRANSPARENCY AND DOCUMENTARY CLARITY

rothoschool

The transparent dissemination of information (e.g. complete documentation downloadable online, clear and comprehensive catalogues, etc.) enables **a conscious and targeted use of our products** avoiding waste. Through our Rothoschool, we teach how to use our products in the most efficient way.



LOGISTICS OPTIMISATION

PACKAGING REDUCTION

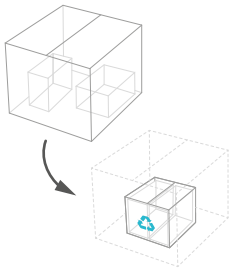

For transport, handling and traceability requirements, many products need packaging, which often has a major impact on the volume to be transported; in addition, its disposal on site can be a problem. That is why we package our products using the minimum necessary to make handling possible. Where possible, we use **easily recyclable and degradable materials** in a short time; we also optimise packaging to reduce the volume transported.

WIDESPREAD PRESENCE

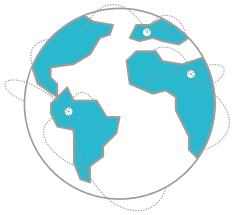

Our global logistics network is constantly evolving to bring distribution centres **ever closer to the customer** and deliver products with less environmental impact. The ambitious goal is to produce and store products closer to the major markets.

INCREASINGLY EFFICIENT PRODUCTS

The Rothoblaas Research & Development group is continuously committed in product optimisation as well as in the development of new solutions. Our environmental awareness leads us down two paths:

- PRODUCTION OPTIMISATION: we reduce raw material consumption in our products
- ENGINEERING OPTIMISATION: we increase the performance of our products so that we can use less of them

Four examples of R&D projects are given, which led to a reduction in raw material consumption, while increasing strength in some cases. Here is a comparison of old and new products:

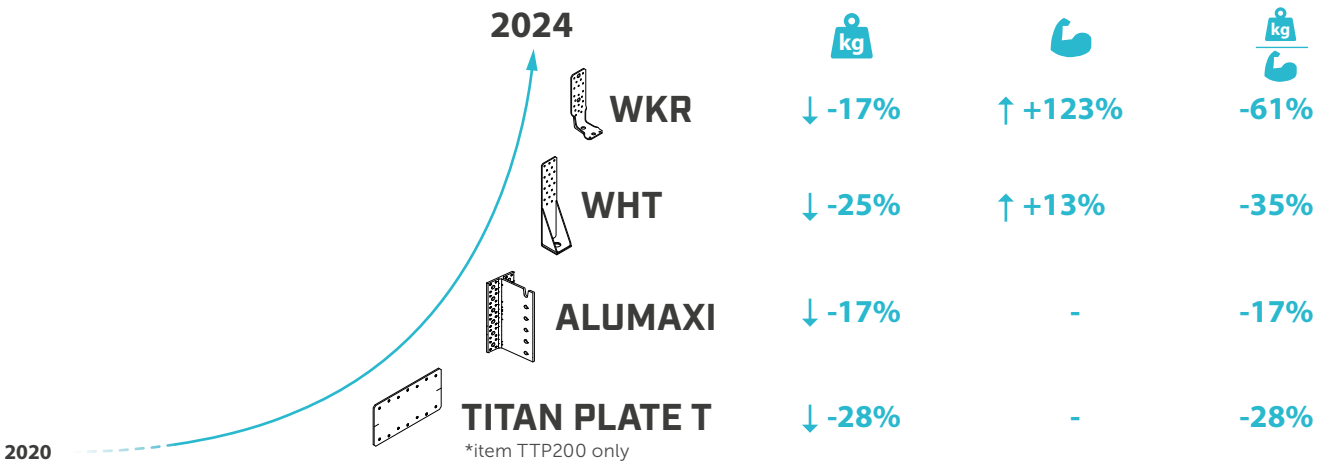

The table shows some product efficiency indicators, calculated as an average between versions of the same product:

- WEIGHT: is an indicator of the amount of raw material used to manufacture the product (the lower the weight of the connector, the less metal is used to produce it);
- STRENGTH: is an indicator of how many connectors will be used in a timber structure (the greater the strength of the connection, the fewer connections will be used);
- WEIGHT/STRENGTH RATIO: is an indicator of the structural efficiency of the connector. A decrease in this parameter indicates that, for the same strength, less raw material was used to produce it, benefiting the environment.

The examples show how our efforts lead to increasingly efficient products with significant environmental benefits.

REACH

Registration, Evaluation, Authorisation of Chemicals (CE n. 1907/2006)

REACH REGULATION

It's the European regulation for the management of chemical substances as such or as components of **preparations** (mixtures) and **items** (ref. Art. 3 points 2 and 3). This regulation attributes precise responsibilities to each link of the supply chain regarding the communication and safe use of hazardous substances.

WHAT'S IT FOR?

REACH aims to ensure a high level of human health and environmental protection. The introduction of REACH requires the collection and communication of complete information on the dangers of certain substances and their safe use within the supply chain (regulation CLP 1272/2008).

In particular, for users, these concepts translate into:

- SVHC - Substances of Very High Concern
  List of any hazardous substances contained in items

- SDS - Safety Data Sheet
  Document that contains the information for correct management of every hazardous **mixture**

REACH PROCESS

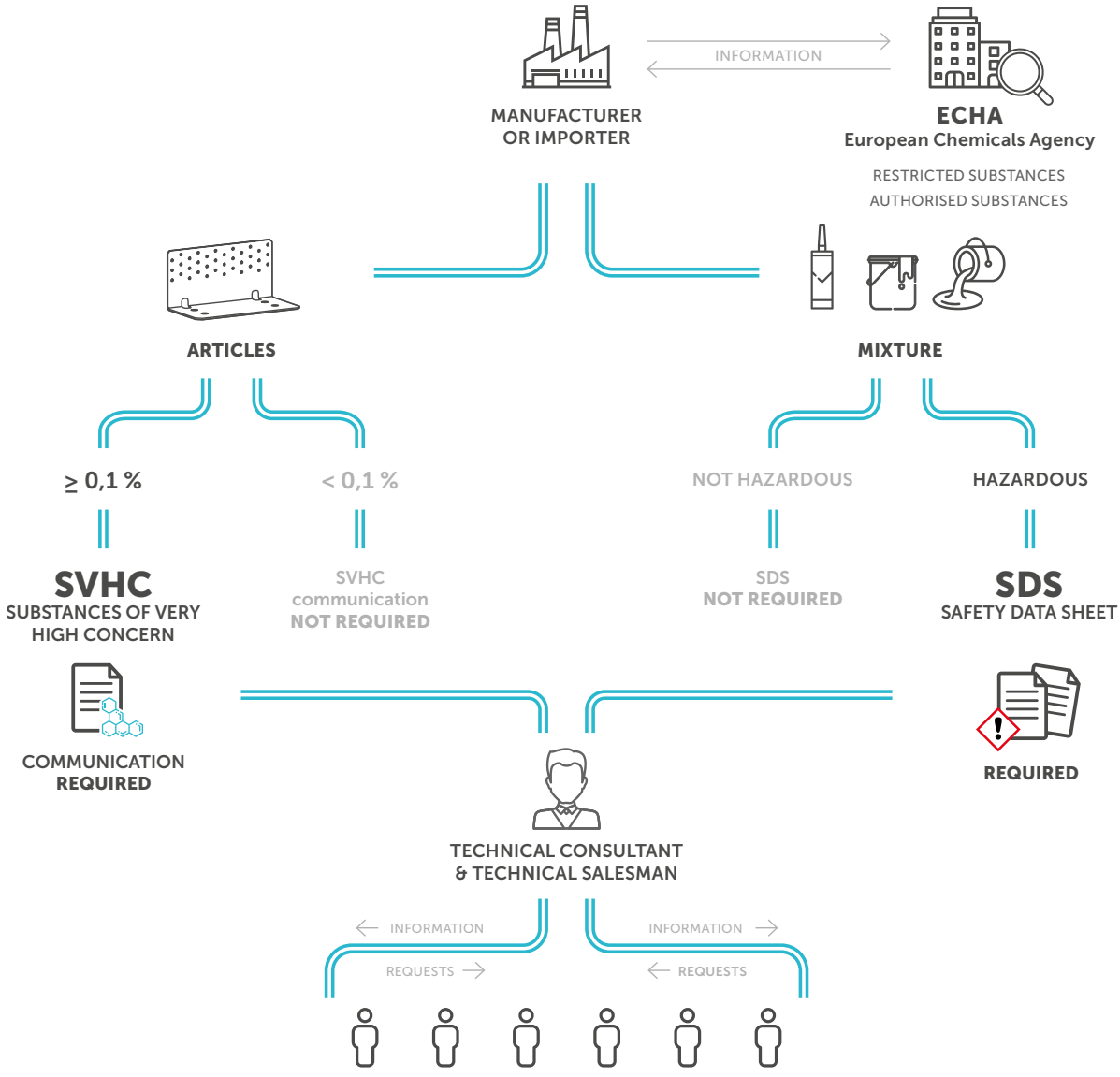

C4 CORROSION CLASS

SERVICE CLASSES

The service classes are related to the thermo-hygrometric conditions of the environment in which a timber structural element is installed. They relate the temperature and humidity of the surroundings to the water content within the material.

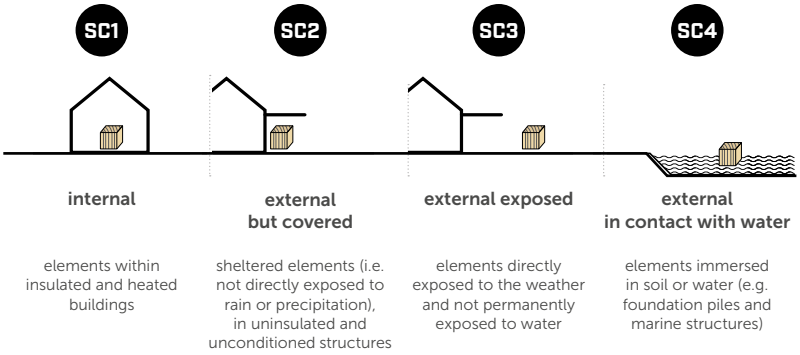

EXPOSURE	SC1	SC2	SC3	SC4
	internal	external but covered	external exposed	external in contact with water
	elements within insulated and heated buildings	sheltered elements (i.e. not directly exposed to rain or precipitation), in uninsulated and unconditioned structures	elements directly exposed to the weather and not permanently exposed to water	elements immersed in soil or water (e.g. foundation piles and marine structures)
MOISTURE LEVEL atmospheric/timber	65% (12%)	85% (20%)	95% (24%)	- saturated

ATMOSPHERIC CORROSIVITY CLASSES

Corrosion caused by the atmosphere depends on relative humidity, air pollution, chloride content and whether the connection is internal, external protected or external. Exposure is described by the CE category which is based on category C as defined in EN ISO 9223. Atmospheric corrosivity only affects the exposed part of the connector.

	C1	C2	C3	C4	C5
MOISTURE	rare condensation	rare condensation	occasional condensation	frequent condensation	permanent condensation
DISTANCE FROM THE SEA		> 10 km from the coast	from 10 to 3 km from the coast	from 3 to 0,25 km from the coast	< 0,25 km from the coast
POLLUTION	very low	low	average	high	very high
	deserts, central arctic/antarctic	rural areas with little pollution, small towns	urban and industrial areas with medium pollution	highly polluted urban and industrial area	environment with very high industrial pollution

WOOD CORROSIVITY CLASSES

Corrosion caused by wood depends on the wood species, wood treatment and moisture content. Exposure is defined by the TE category as indicated.
The corrosivity of wood only affects the connector part inserted in the wooden element.

	T1	T2	T3	T4	T5
TIMBER pH AND TREATMENT	any	any	pH > 4 "standard" timbers low acidity and no treatment	pH ≤ 4 "aggressive" woods high acidity and/or treated	any
MOISTURE CONTENT OF THE WOOD	≤ 10%	10% < ≤ 16%	16% < ≤ 20%		> 20%
SERVICE CLASS	SC1	SC2	SC3	SC3	SC4

LEGEND: use according to regulations — Rothoblaas experience

For further information, see **SMARTBOOK TIMBER SCREWS** at www.rothoblaas.com.

JOINTS FOR BEAM

JOINTS FOR BEAM

HOOK CONNECTORS

LOCK T MINI
CONCEALED TIMBER-TO-TIMBER CONNECTOR 18

LOCK T MIDI
CONCEALED TIMBER-TO-TIMBER CONNECTOR 28

LOCK C
CONCEALED HOOK TIMBER-TO-CONCRETE CONNECTOR 42

LOCK FLOOR
JOINT PROFILE FOR PANELS 50

DOVETAIL JOINTS

UV T
TIMBER-TO-TIMBER DOVETAIL CONNECTOR 60

WOODY
TIMBER CONNECTOR FOR WALLS, FLOORS AND ROOFS 66

“T” JOINTS

ALUMINI
CONCEALED BRACKET WITHOUT HOLES 72

ALUMIDI
CONCEALED BRACKET WITH AND WITHOUT HOLES 78

ALUMAXI
CONCEALED BRACKET WITH AND WITHOUT HOLES 88

ALUMEGA
PINNED CONNECTION FOR POST AND BEAM 96

ROUND CONNECTORS

DISC FLAT
REMOVABLE CONCEALED CONNECTOR 114

SIMPLEX
REMOVABLE CONCEALED CONNECTOR 120

METAL HANGERS

BSA
METAL HANGER WITH EXTERNAL WINGS 124

BSI
METAL HANGER WITH INTERNAL WINGS 132

STRUCTURAL ADHESIVES

XEPOX
TWO COMPONENTS EPOXY ADHESIVE 136

NEOPRENE SUPPORTS

NEO
NEOPRENE SUPPORTING PLATE 150

POST AND BEAM CONSTRUCTION SYSTEM

The modern POST AND BEAM construction system consists of a frame structure made of glulam, LVL or other engineered timber with a considerable distance between columns. The floors are normally made of timber-based panels, while the lateral stability of the building is normally entrusted to a bracing system (core, inclined rods or walls).
The wide choice of connection systems makes it possible to respond to multiple design requirements: in addition to structural strength and structural robustness, the connections must guarantee a good aesthetic result and flexibility of installation. Prefabrication, disassembly, and construction of hybrid structures are possible depending on the connection chosen.

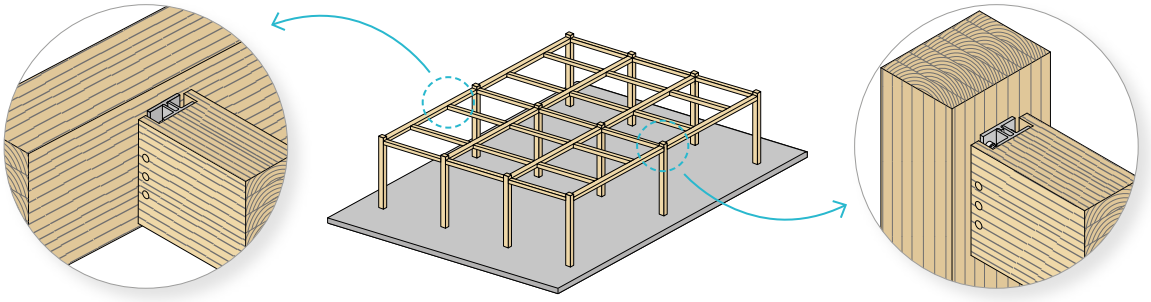

secondary beam-main beam connection

main beam-to-column connection

In this chapter we present the complete range of Rothoblaas connectors suitable for making both types of connections, both inside floors and for roofs.

AESTHETIC REQUIREMENTS

CONCEALED JOINT

The connectors are placed entirely inside the timber elements to provide an optimal aesthetic result.

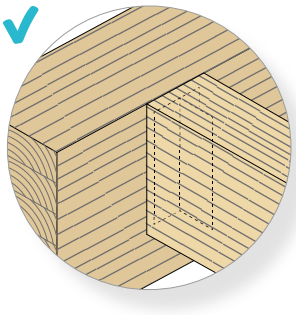

EXPOSED JOINT

The metal fasteners are placed on the surface of the timber element, thus being visible and with a high aesthetic impact.

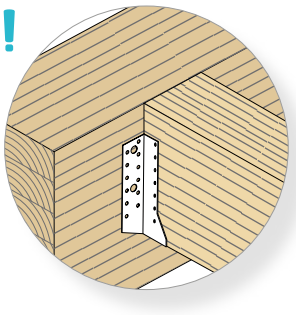

INSTALLATION FLEXIBILITY

Each construction site has its own logistical requirements that impose different construction sequences. For example, by choosing the most suitable fastening mode, it is possible to install the beam in different ways.

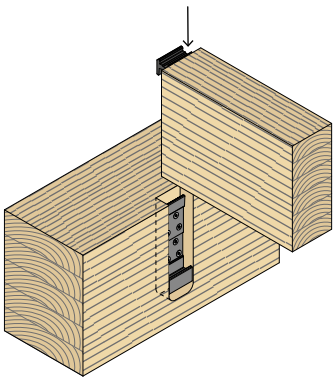

TOP - DOWN

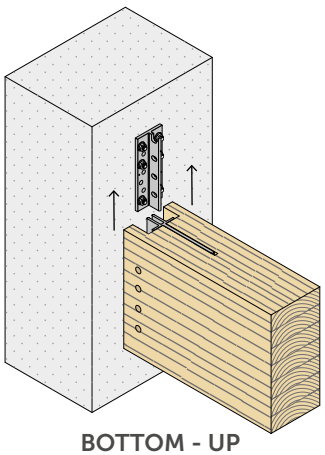

BOTTOM - UP

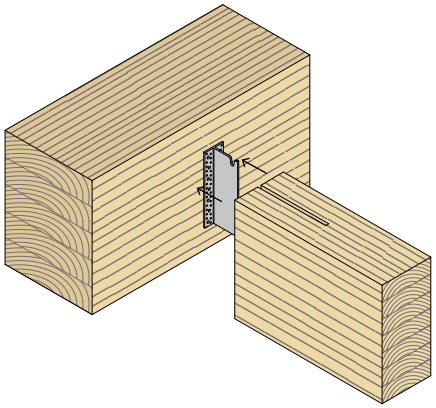

AXIAL

PREFABRICATION AND DISASSEMBLY

Some connection systems can be partially or fully prefabricated in the factory, pre-installing the connectors on the beams and columns, thus working in a controlled environment not subject to weather events. On site, it is sufficient to integrate the connection with just a few connectors, minimising the risk of errors. Prefabrication often also means disassembly: what requires little effort on site to be assembled, will require little time in the future to be disassembled for building modification/ expansion needs, or for demolition at the end of its useful life.

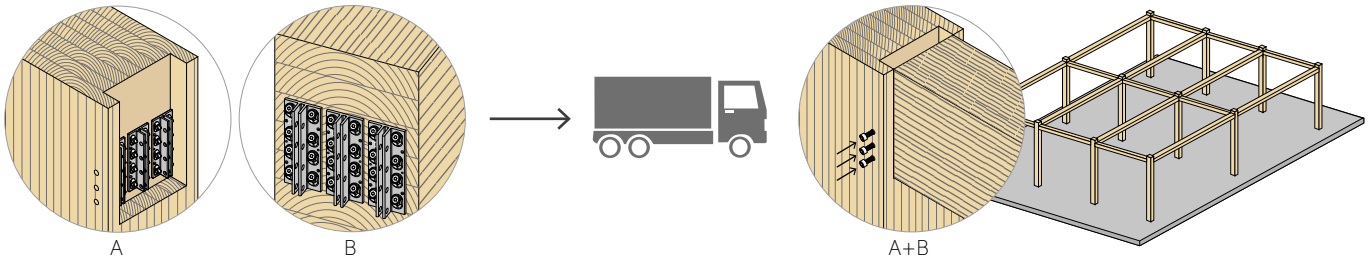

prefabrication off-site **assembly on site**

HYBRID STRUCTURES

It is possible to connect timber beams to structural elements made of different materials: timber, steel or concrete. The full Rothoblaas range has the right solution for every need.

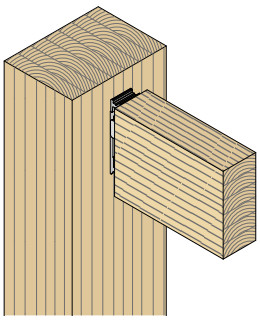

timber-to-timber

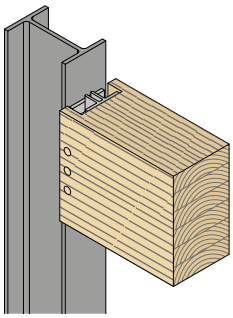

timber-to-steel

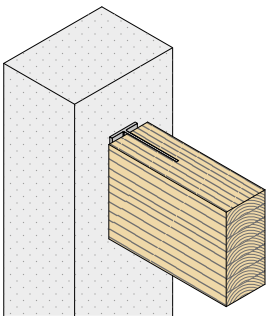

timber-to-concrete

STRUCTURAL STRENGTH

Beam connections must mainly withstand gravitational loads F_v. The tested and certified strengths in all directions are a guarantee of structural robustness in the event of exceptional events (shocks, explosions, hurricanes, earthquakes).
This contributes to the structural strength of the building, ensuring greater safety and resistance.

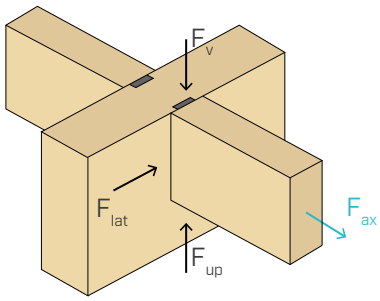

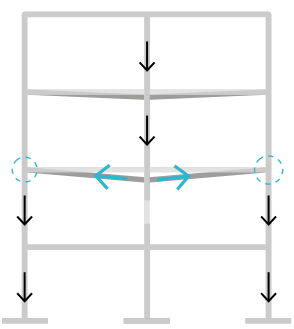

FIRE AND METAL CONNECTIONS

MATERIAL BEHAVIOUR

Timber structures properly designed ensure high performance also under fire circumstances.



TIMBER
Timber is a combustible material that burns at a predictable rate: when exposed to fire, a portion of the cross section is lost through charring and pyrolysis while the inner, residual section retains its mechanical characteristics (strength and stiffness).

One-dimensional design (effective) charring rate for solid timber and glulam $ß_0 \approx 0{,}65$ mm/min

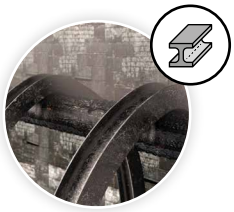

METAL
Metals, primarily steel used in the construction of timber buildings, are noncombustible materials that are highly heat conductive and
can cause structural failures during fire events if not detailed and protected correctly. When exposed to fire and high temperatures, the mechanical properties (strength and stiffness) of metal rapidly decrease.
This aspect, if not considered, may cause an unintended collapse of the connection.

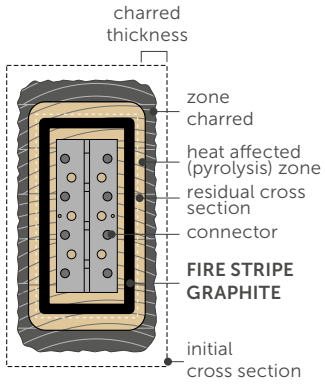

Looking at the cross-section of a timber element after it has been exposed to fire, three layers can be identified:

- a **charred zone** corresponding to the layer of wood completely affected by the combustion process;
- a **heat affected (pyrolysis) zone** that has not yet been charred but has undergone temperature increases above 100°C, which is assumed to have zero residual resistance;
- a **residual section** that retains its initial strength and stiffness properties.

By positioning the **connector** within the residual section, the fire performance required by the design can be achieved. Installation requirements and installation tolerances can lead to a gap between the timber elements. Inside this gap, profiles**(FIRE STRIPE GRAPHITE**) can be inserted,which, expanding through the heat of the fire, seal the gap and insulate the connector.

FIRE DESIGN

The design of a connection has as its starting point the verification at room temperature against ultimate limit states (ULS). It is good practice to design the connection for a work rate lower than the unit for which the design strength is greater than the acting load. This over-resistance of the connection at room temperature is reflected as a favourable effect for verification under fire conditions. Under fire conditions, the stress is 30-50% of the load at room temperature (coefficient η_{fi} according to EN 1995-1-2:2005).

room temperature

$R_{d,ULS} \geq E_{d,ULS}$

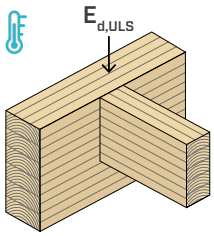

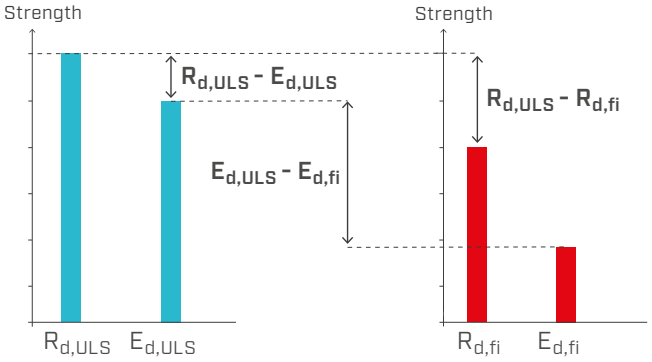

fire conditions

$R_{d,fi} \geq E_{d,fi}$

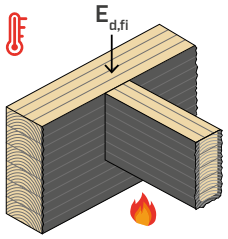

$R_{d,ULS} - R_{d,fi}$	≤	$R_{d,ULS} - E_{d,ULS}$	+	$E_{d,ULS} - E_{d,fi}$
Drop in strength from ambient temperature to fire conditions		Over-resistance at room temperature (ultimate limit states)		Stress drop in the event of fire

$R_{d,ULS}$	design strength at room temperature (ultimate limit states)
$E_{d,ULS}$	design stress at room temperature
$R_{d,fi}$	design strength under fire conditions
$E_{d,fi}$	design stress under fire conditions

EXPERIMENTAL TESTING

An experimental campaign was carried out to study the fire resistance of certain aluminium connections as a function of the gap between the secondary and primary beam. Three types of connections were made with **LOCKT75215** connectors, manufactured from aluminium alloy EN AW6005A-T6, with gaps of 1 mm, 6 mm with the addition of **FIRE STRIPE GRAPHITE** on the head of the secondary beam and 6 mm. The load curve under fire conditions is according to ISO 834. The graphs show the average temperature measured on the connector component fastened on the main beam and the estimated strength of the aluminium according to EN 1999-1-2:2007.

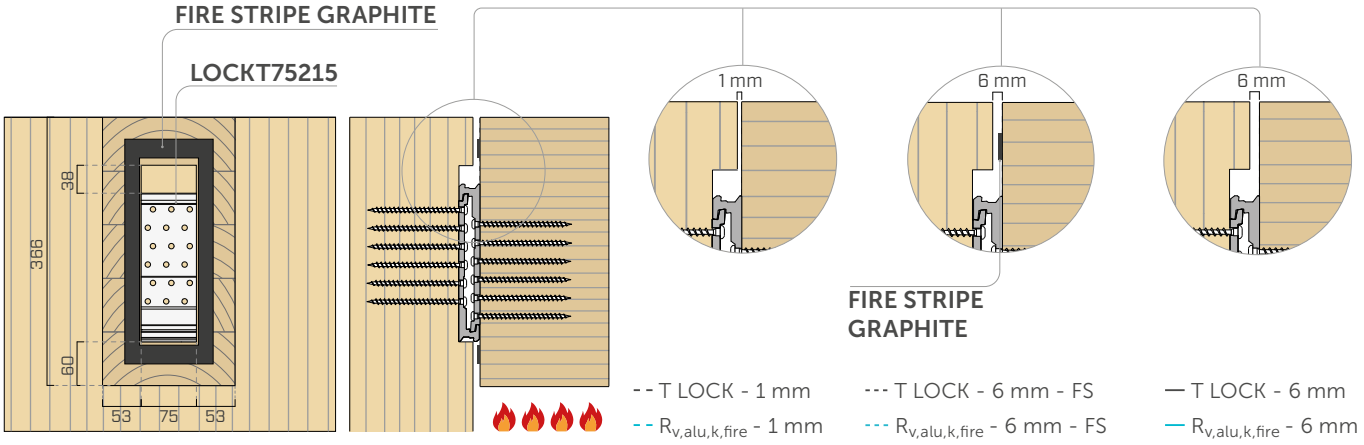

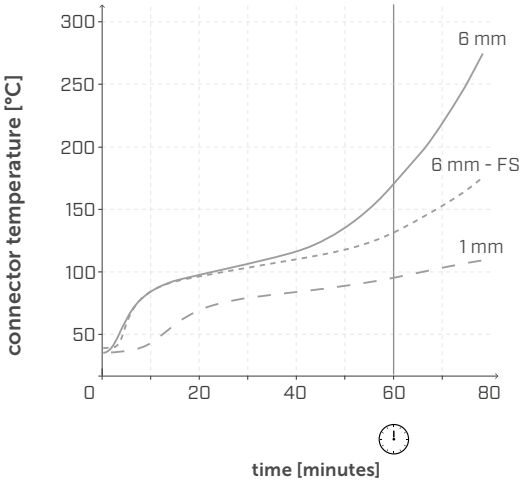

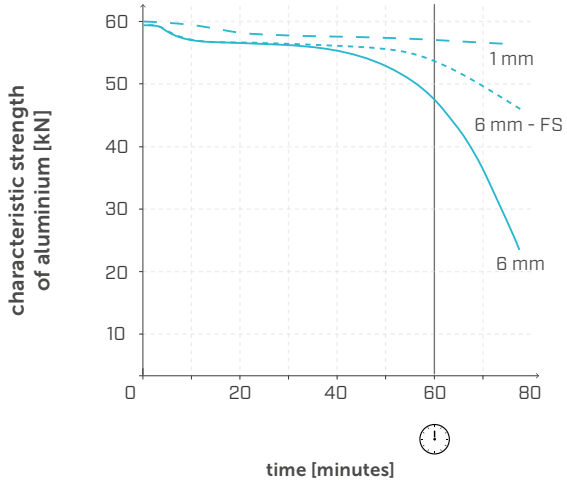



At room temperature the characteristic strength of aluminium of the **LOCKT75215** connector corresponds to 60 kN. From the graph, it is possible to estimate the decrease in strength of aluminium as the temperature changes. Specifically, at 60 minutes the strength drops to 56.5 kN (-6%) with 1 mm gap, 53.0 kN (-12%) with 6 mm gap + **FIRE STRIPE GRAPHITE** and 47.0 kN with 6 mm gap (-22%). Under fire conditions, the acting load is reduced by 50-70% depending on the type of building.

time	configuration	$R_{v,alu,kfire}$	aluminium strength reduction
[min]	[mm]	[kN]	[%]
60	1 mm	56,5	-6%
	6 mm - FS	53,0	-12%
	6 mm	47,0	-22%

This project has received funding from the European Union's Horizon 2020 research and innovation programme under grant agreement N° 862820

Friðriksdóttir H. M., Larsen F., Pope I., et al (2022) "Fire behaviour of aluminium-wood joints with tolerance gaps" 12th International Conference on Structures in Fire

CHOICE OF THE CONNECTION SYSTEM

Predimensioning tables for choosing the most suitable connector according to beam cross-section and strength.

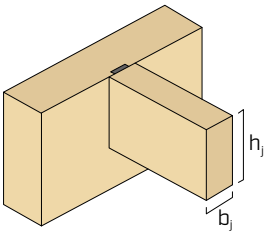

SECONDARY BEAM BASE b_j [mm]

SECONDARY BEAM **HEIGHT** h_j [mm]

11 3/4	10	8	6	4	1 15/16	0 in	in 0	8	15 3/4	23 5/8	31 1/2	39 3/8	47 1/4
300	250	200	150	100	50	0 mm	mm 0	200	400	600	800	1000	1200

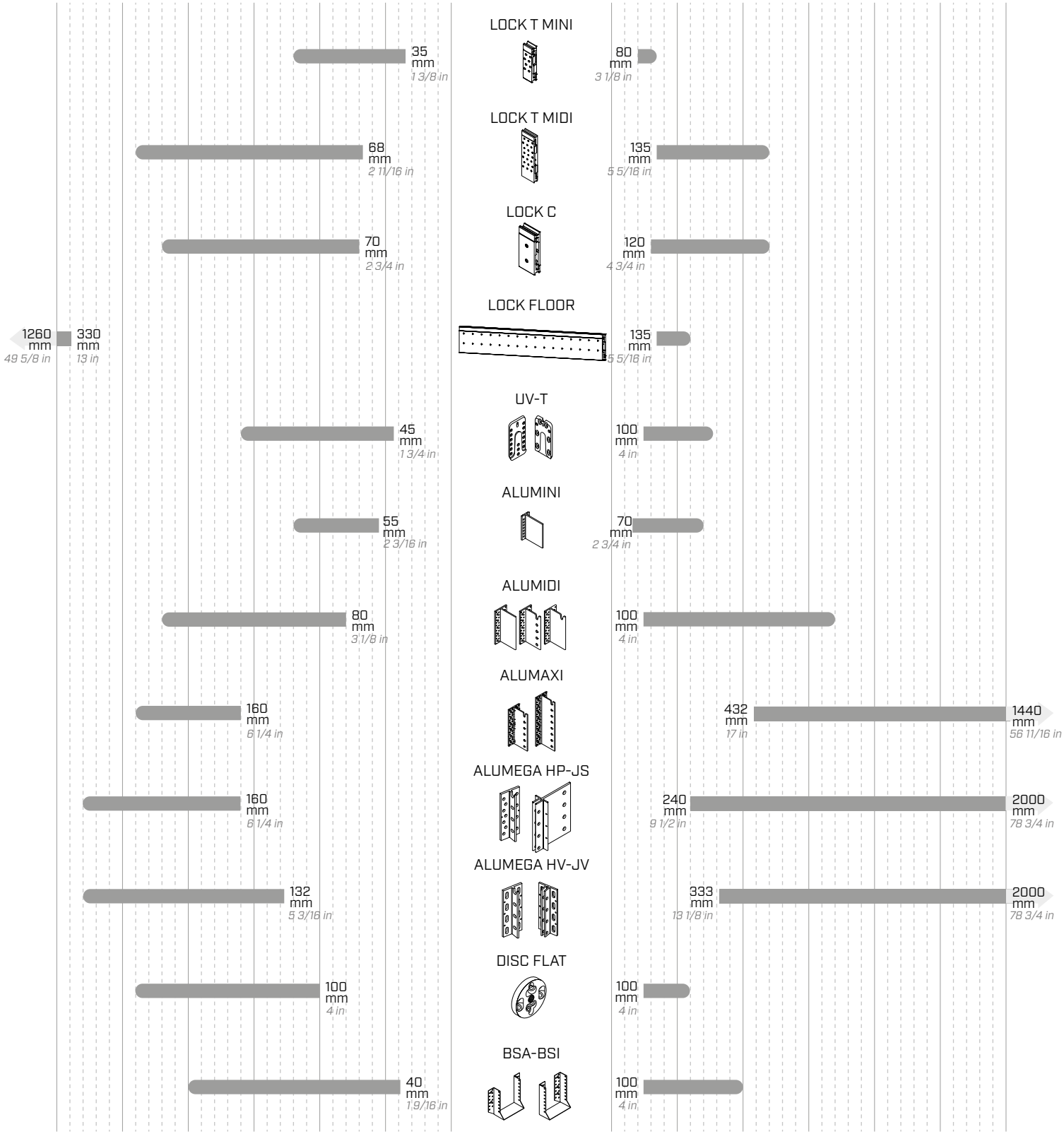

LEGEND

- timber
- concrete
- steel

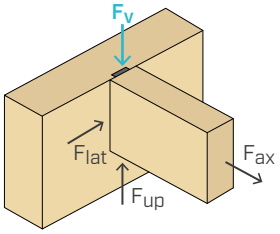

	FIELDS OF USE			OUTDOOR	EXTERNAL LOADS				CHARACTERISTIC STRENGTH ON THE TIMBER SIDE $R_{v,k}$ [kN]
	timber	concrete	steel		F_v	F_{ax}	F_{lat}	F_{up}	0 100 200 300 400 500 600
LOCK T MINI	✓			✓	●	●	●	●	23 kN
LOCK T MIDI	✓			✓	●	●	●	●	120 kN
LOCK C		✓	✓	✓	●	●	●		97 kN
LOCK FLOOR	✓	✓	✓	✓	●	●	●	●	114 kN
UV-T	✓				●	●	●	●	63 kN
ALUMINI	✓	✓	✓	✓	●	●	●	●	36 kN
ALUMIDI	✓	✓	✓	✓	●	●	●	●	155 kN
ALUMAXI	✓	✓	✓	✓	●	●	●	●	369 kN
ALUMEGA HP-JS	✓	✓	✓	✓	●	●	●	●	643 kN
ALUMEGA HV-JV	✓			✓	●	●	●	●	690 kN
DISC FLAT	✓	✓	✓		●		●	●	62 kN
BSA-BSI	✓	✓	✓		●		●	●	95 kN

LOCK T MINI

CONCEALED TIMBER-TO-TIMBER CONNECTOR

VIDEO

CALCULATION TOOL

DESIGN REGISTERED

ETA-19/0831

SERVICE CLASS

SC1 SC2 SC3

For information on the application areas of with reference to environment service class, atmospheric corrosivity class and timber corrosion class, refer to the website www.rothoblaas.com.

SLENDER STRUCTURES

Can be concealed in thin wooden elements (from 35 mm). Ideal for small structures, gazebos and furnishings.

OUTDOOR

For outdoor use (Service class 3). The correct choice of screw enables all fastening requirements to be met, even in aggressive environments.

DISASSEMBLED

Easy and quick to install, it can be fastened with a single type of screw. Joint that can be easily disassembled, ideal for the construction of temporary structures. Certified strengths calculated in all directions: vertical, horizontal and axial.

USA, Canada and more design values available online.

MATERIAL

alu 6005A — EN AW-6005A aluminium alloy

alu 6005A — EVO version with special paint in graphite black colour

EXTERNAL LOADS

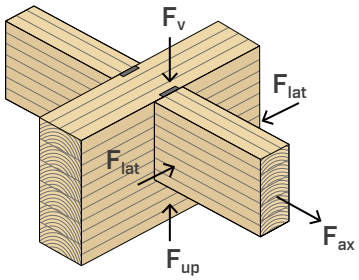

VIDEO

Scan the QR Code and watch the video on our YouTube channel





FIELDS OF USE

Concealed joint in timber-to-timber beam configuration, suitable for small structures, gazebos and furniture. Resistant outdoors, with the coated EVO version also in aggressive environments.

Can be applied to:

- solid timber softwood and hardwood
- glulam, LVL

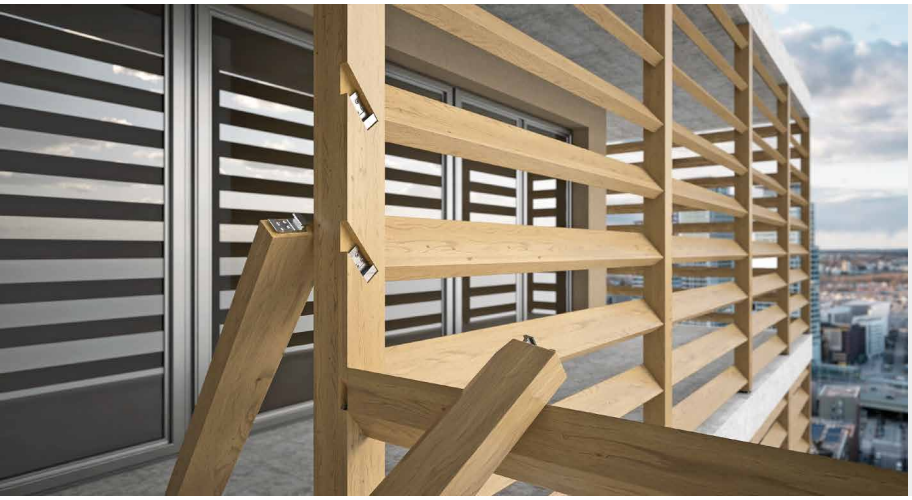

OUTDOOR APPLICATIONS

The dual range with or without special coating, coupled with the correct screw allows the connector to be used in service class 3, even in aggressive environments.

FAÇADES

It allows installation on thin beams. Ideal for the construction of façade sunscreen systems.

CODES AND DIMENSIONS

LOCK T MINI-LOCK T MINI EVO

1

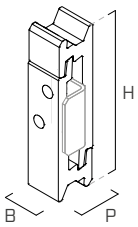

2

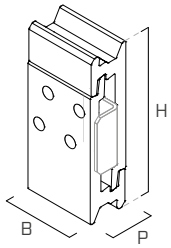

3

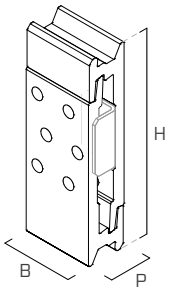

4

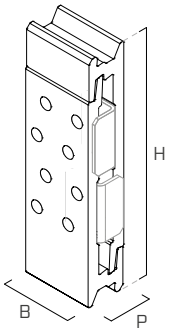

5

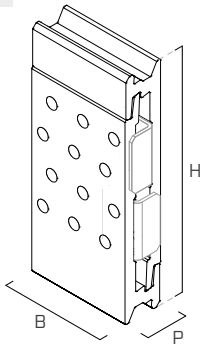

	CODE		B	H	P	*B*	*H*	*P*	n_{screw} x Ø(1)	$n_{LOCKSTOP}$ x type(2)		pcs.(3)
	LOCK T MINI	LOCK T MINI EVO	[mm]	[mm]	[mm]	*[in]*	*[in]*	*[in]*	[pcs]			
1	**LOCKT1880**	**LOCKTEVO1880**	17,5	80	20	*11/16*	*3 1/8*	*0.79*	4 x Ø5 | *Ø0.20*	1 x LOCKSTOP5U	●	50
2	**LOCKT3580**	**LOCKTEVO3580**	35	80	20	*1 3/8*	*3 1/8*	*0.79*	8 x Ø5 | *Ø0.20*	2 x LOCKSTOP5/ 1 x LOCKSTOP35	●	50
3	**LOCKT35100**	**LOCKTEVO35100**	35	100	20	*1 3/8*	*4*	*0.79*	12 x Ø5 | *Ø0.20*	2 x LOCKSTOP5/ 1 x LOCKSTOP35	●	50
4	**LOCKT35120**	**LOCKTEVO35120**	35	120	20	*1 3/8*	*4 3/4*	*0.79*	16 x Ø5 | *Ø0.20*	4 x LOCKSTOP5/ 2 x LOCKSTOP35	●	25
5	**LOCKT53120**	**LOCKTEVO53120**	52,5	120	20	*2 1/16*	*4 3/4*	*0.79*	24 x Ø5 | *Ø0.20*	4 x LOCKSTOP5	●	25

Screws and LOCK STOP are not included in the package.
(1) Number of screws for connector pairs.
(2) The LOCK STOP installation options are indicated on page 23.
(3) Number of connector pairs.

LOCK STOP | LOCKING DEVICE FOR Flat

1

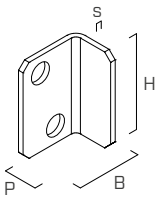

2

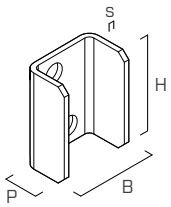

3

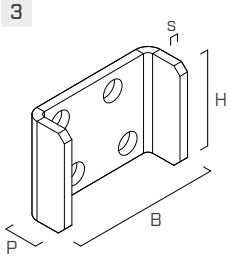

	CODE	description	B	H	P	s	*B*	*H*	*P*	*s*	pcs
			[mm]	[mm]	[mm]	[mm]	*[in]*	*[in]*	*[in]*	*[in]*	
1	**LOCKSTOP5(*)**	carbon steel DX51D+Z275	19,0	27,5	13	1,5	*3/4*	*1 1/16*	*1/2*	*0.06*	100
2	**LOCKSTOP5U(*)**	carbon steel DX51D+Z275	21,5	27,5	13	1,5	*7/8*	*1 1/16*	*1/2*	*0.06*	50
3	**LOCKSTOP35**	stainless steel A2 | AISI 304	41,0	28,5	13	2,5	*1 5/8*	*1 1/8*	*1/2*	*0.10*	50

(*) Not holding CE marking.

FASTENERS

type	description		d [mm]	support	page
LBS	round head screw		5		571
LBS EVO	C4 EVO round head screw		5		571
LBS HARDWOOD	round head screw on hardwoods		5		572
LBS HARDWOOD EVO	C4 EVO round head screw on hardwoods		5		572
HBS PLATE EVO	C4 EVO pan head screw		5		573
KKF AISI410	pan head screw		5		574

INSTALLATION METHODS

CORRECT INSTALLATION

Install the beam by lowering it from the top, without tilting it. Ensure proper seating and coupling of the connector at both the top and bottom, as shown in the figure.

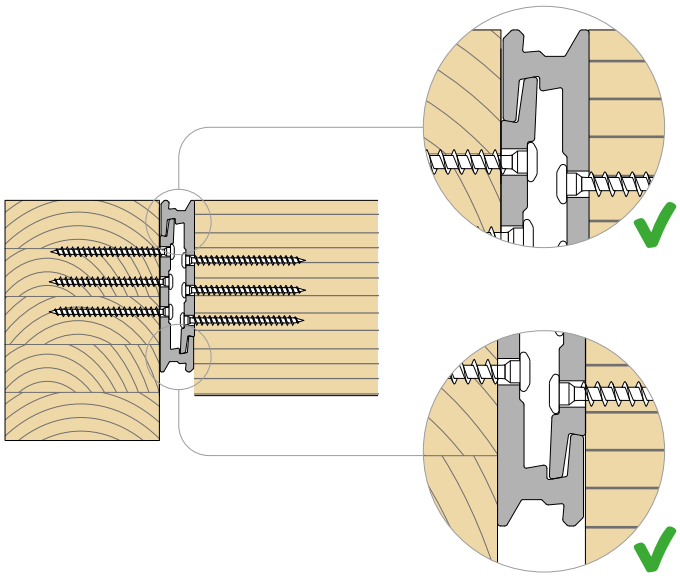

INCORRECT INSTALLATION

Partial and incorrect coupling of the connector. Ensure that both flanges of the connector are properly seated in their respective seats.

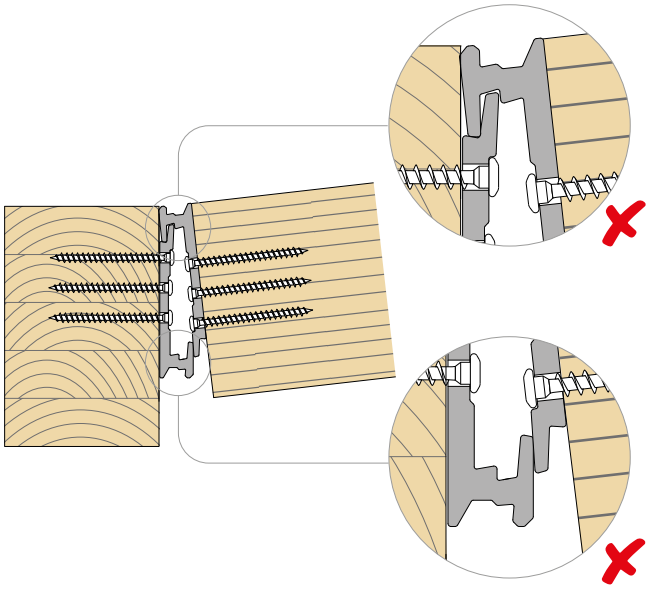

OPTIONAL INCLINED SCREW

45° inclined holes must be drilled on site using a 5 mm diameter and metal drill bit. The image shows the positions for the optional inclined holes.

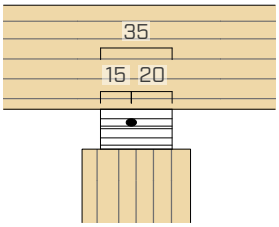

LOCKT3580 | LOCKTEV03580
LOCKT35120 | LOCKTEV035120

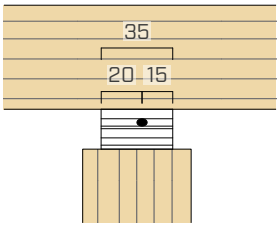

LOCKT35100 | LOCKTEV035100

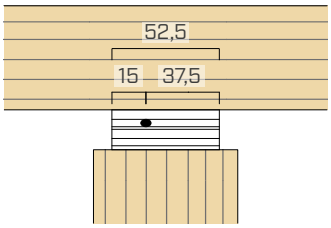

LOCKT53120 | LOCKTEV053120

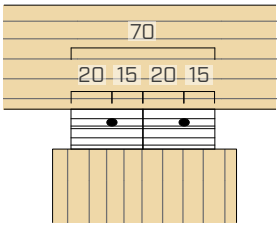

2 x LOCKT35100 | LOCKTEV035100

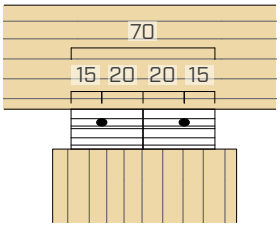

2 x LOCKT35120 | LOCKTEV035120

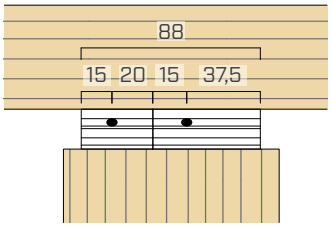

1 x LOCKT35120 | LOCKTEV035120
1 x LOCKT53120 | LOCKTEV053120

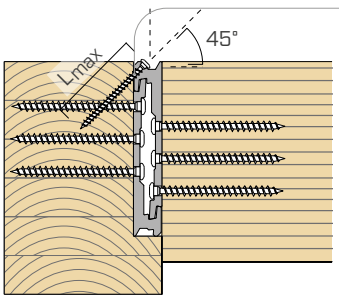

optional screw Ø5 mm - L_{max} = 50 mm

INSTALLATION | LOCK T MINI-LOCK T MINI EVO

EXPOSED INSTALLATION ON COLUMN

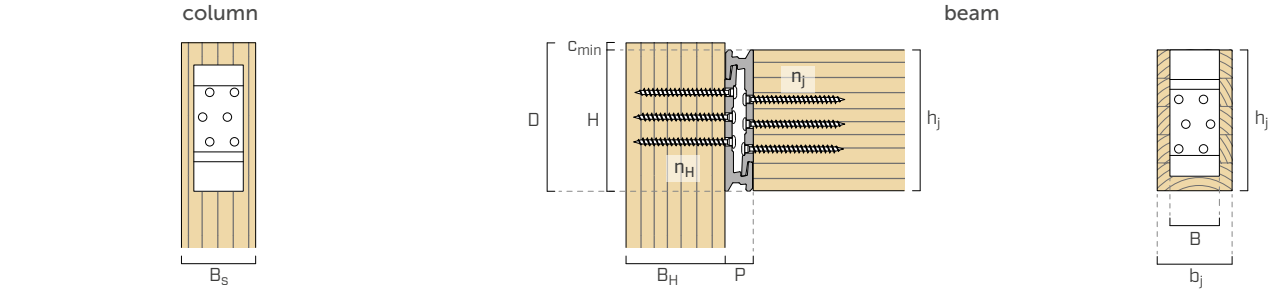

CONCEALED INSTALLATION ON BEAM

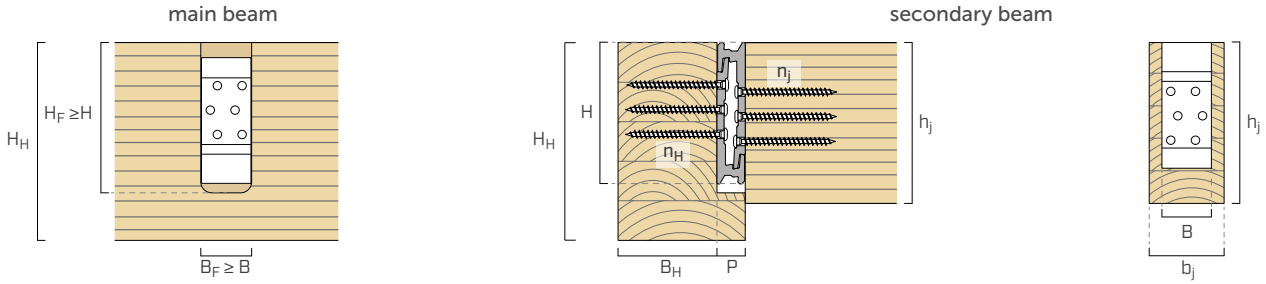

The H_F dimension refers to the minimum height of the routing at constant width. The radius of the milling tool must be taken into account when cutting the routing.

connector	B x H	fasteners LBS | LBS EVO | KKF | HBS PLATE EVO $n_H + n_j$ - Ø x L	main element column[1] B_S x B_H	main element beam B_H x H_H	secondary beam b_j x h_j with pre-drilling hole	secondary beam b_j x h_j without pre-drilled hole
	[mm]	[mm]	[mm]	[mm]	[mm]	[mm]
LOCKT1880 **LOCKTEVO1880**	17,5 x 80	2 + 2 - Ø5 x 50 2 + 2 - Ø5 x 70	35 x 50 35 x 70	50 x 95 70 x 95	35 x 80	43 x 80
LOCKT3580 **LOCKTEVO3580**	35 x 80	4 + 4 - Ø5 x 50 4 + 4 - Ø5 x 70	53 x 50 53 x 70	50 x 95 70 x 95	53 x 80	61 x 80
LOCKT35100 **LOCKTEVO35100**	35 x 100	6 + 6 - Ø5 x 50 6 + 6 - Ø5 x 70	53 x 50 53 x 70	50 x 115 70 x 115	53 x 100	61 x 100
LOCKT35120 **LOCKTEVO35120**	35 x 120	8 + 8 - Ø5 x 50 8 + 8 - Ø5 x 70	53 x 50 53 x 70	50 x 135 70 x 135	53 x 120	61 x 120
LOCKT53120 **LOCKTEVO53120**	52,5 x 120	12 + 12 - Ø5 x 50 12 + 12 - Ø5 x 70	70 x 50 70 x 70	50 x 135 70 x 135	70 x 120	78 x 120
2 x LOCKT35100 **2 x LOCKTEVO35100**	70 x 100[2]	12 + 12 - Ø5 x 50 12 + 12 - Ø5 x 70	88 x 50 88 x 70	50 x 115 70 x 115	88 x 100	96 x 100
2 x LOCKT35120 **2 x LOCKTEVO35120**	70 x 120[2]	16 + 16 - Ø5 x 50 16 + 16 - Ø5 x 70	88 x 50 88 x 70	50 x 135 70 x 135	88 x 120	96 x 120
1 x LOCKT35120 + **1 x LOCKT53120** **1 x LOCKTEVO35120 +** **1 x LOCKTEVO53120**	87,5 x 120[2]	20 + 20 - Ø5 x 50 20 + 20 - Ø5 x 70	105 x 50 105 x 70	50 x 135 70 x 135	105 x 120	113 x 120

[1] The screws must be installed in the column with pre-drilled holes.
[2] Measurement obtained by coupling two connectors with the same height H. For example, LOCK T 70 x 120 mm is obtained by placing two LOCK T 35 x 120 mm connectors side by side.

CONNECTOR POSITIONING

CODE		c_{min} [mm]	D [mm]
LOCKT1880	**LOCKTEVO1880**	7,5	87,5
LOCKT3580	**LOCKTEVO3580**	7,5	87,5
LOCKT35100	**LOCKTEVO35100**	5,0	105,0
LOCKT35120	**LOCKTEVO35120**	2,5	122,5
LOCKT53120	**LOCKTEVO53120**	2,5	122,5

The connector on column must be lowered by an amount c_{min} from the top of the beam to meet the minimum distance of the screws from the unloaded end of the column. It is recommended to use dimension "D" for positioning the connector on column.
Alignment between the top of column and beam can be achieved by lowering the connector by an amount c_{min} relative to the top of beam (minimum beam height $h_j + c_{min}$).

INSTALLATION | LOCK STOP ON LOCK T MINI

LOCKT1880 + 1 x LOCKSTOP5U

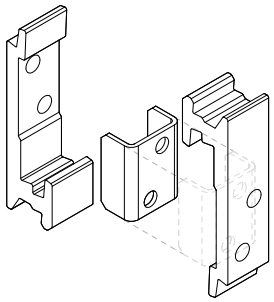

LOCKT35120 + 4 x LOCKSTOP5
LOCKT3580 + 2 x LOCKSTOP5
LOCKT35100 + 2 x LOCKSTOP5
LOCKT53120 + 4 x LOCKSTOP5

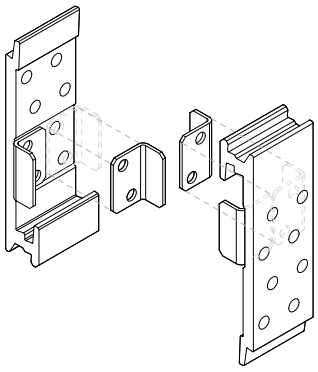

LOCKT35120 + 2 x LOCKSTOP35
LOCKT3580 + 1 x LOCKSTOP35
LOCKT35100 + 1 x LOCKSTOP35

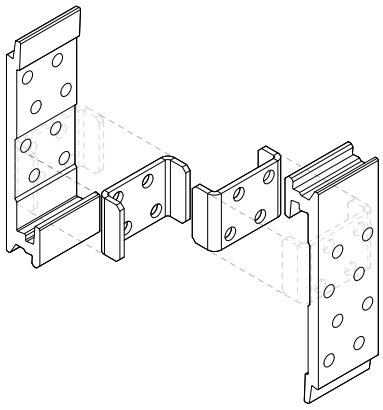

LOCK STOP| assembly

connector[1]		assembly configurations		
	B x H [mm]	LOCKSTOP5 [pcs]	LOCKSTOP5U [pcs]	LOCKSTOP35 [pcs]
LOCKT1880	17,5 x 80	-	x 1	-
LOCKT3580	35 x 80	x 2	-	x 1
LOCKT35100	35 x 100	x 2	-	x 1
LOCKT35120	35 x 120	x 4	-	x 2
LOCKT53120	52,5 x 120	x 4	-	-

INSTALLATION | LOCK STOP ON LOCK T MINI COUPLED

LOCKT70100 + 2 x LOCKSTOP5

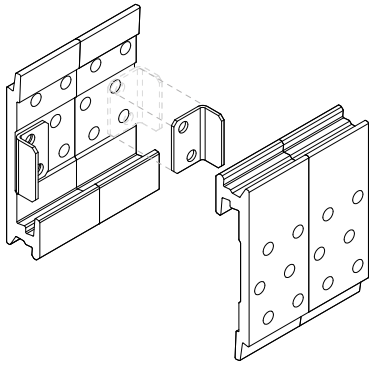

LOCKT70120 + 4 x LOCKSTOP5

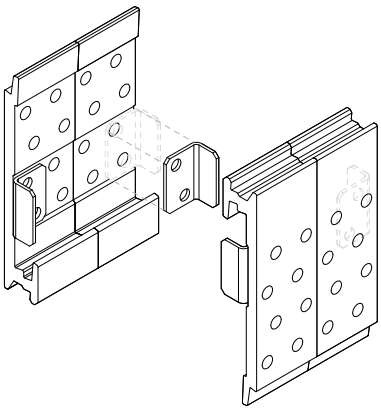

LOCKT88120 + 4 x LOCKSTOP5

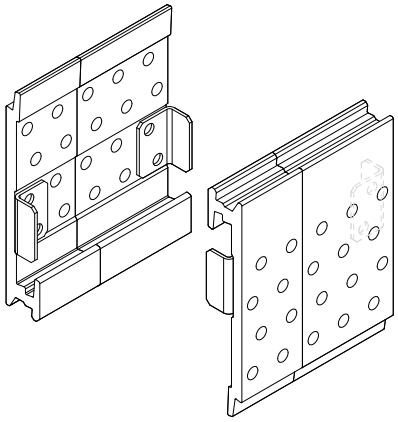

LOCK STOP| assembly

connector[1]		assembly configurations		
	B x H [mm]	LOCKSTOP5 [pcs]	LOCKSTOP5U [pcs]	LOCKSTOP35 [pcs]
LOCKT70100 (LOCKT35100 + LOCKT35100)	70 x 100	x 2	-	-
LOCKT70120 (LOCKT35120 + LOCKT35120)	70 x 120	x 4	-	-
LOCKT88120 (LOCKT35120 + LOCKT53120)	87,5 x 120	x 4	-	-

NOTES

[1] Configurations are valid for LOCK T MINI EVO connectors.

STRUCTURAL VALUES | TIMBER-TO-TIMBER | F_v | F_{up}

beam

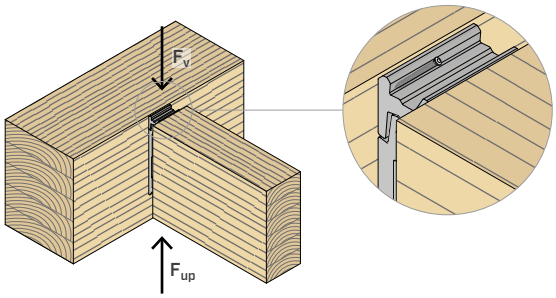

column

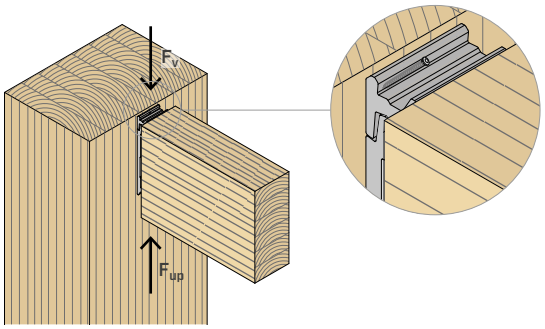

connector	B x H [mm]	fasteners screw LBS | LBS EVO $n_H + n_j$ - Ø x L [mm]	$R_{v,k\ timber}$ C24 [kN]	GL24h [kN]	C50 [kN]	$R_{v,k\ alu}$ [kN]	fasteners 45° screws LBS | LBS EVO $n_H + n_j$ - Ø x L [mm]	$R_{up,k\ timber}$ [kN]
LOCKT1880 **LOCKTEVO1880**	18 x 80	2 + 2 - Ø5 x 50 2 + 2 - Ø5 x 70	**2,3** **2,8**	**2,5** **3,0**	**3,2** **3,8**	**10**	-	**-**
LOCKT3580 **LOCKTEVO3580**	35 x 80	4 + 4 - Ø5 x 50 4 + 4 - Ø5 x 70	**4,5** **5,7**	**4,9** **6,0**	**6,4** **7,5**	**20**	1 - Ø5 x 50	**2,1**
LOCKT35100 **LOCKTEVO35100**	35 x 100	6 + 6 - Ø5 x 50 6 + 6 - Ø5 x 70	**6,8** **8,5**	**7,4** **9,0**	**9,6** **11,3**	**20**	1 - Ø5 x 50	**2,1**
LOCKT35120 **LOCKTEVO35120**	35 x 120	8 + 8 - Ø5 x 50 8 + 8 - Ø5 x 70	**9,1** **11,4**	**9,9** **12,0**	**12,8** **15,1**	**20**	1 - Ø5 x 50	**2,1**
LOCKT53120 **LOCKTEVO53120**	53 x 120	12 + 12 - Ø5 x 50 12 + 12 - Ø5 x 70	**13,8** **17,1**	**15,0** **17,9**	**19,3** **22,7**	**30**	1 - Ø5 x 50	**2,1**

STRUCTURAL VALUES | TIMBER-TO-TIMBER | F_{lat}

inclined screw

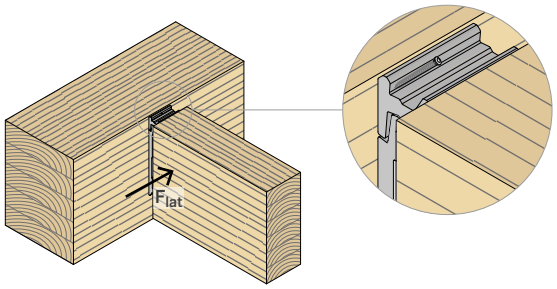

LOCK STOP

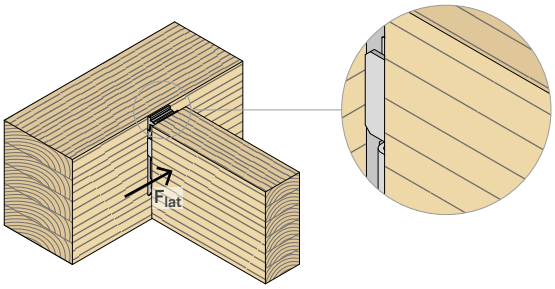

connector	B x H [mm]	fasteners screw LBS | LBS EVO $n_H + n_j$ - Ø x L [mm]	inclined screw fasteners 45° screws LBS | LBS EVO $n_H + n_j$ - Ø x L [mm]	inclined screw $R_{lat,k\ timber}$ C24 [kN]	LOCK STOP fasteners $n_{LOCKSTOP}$ - type [mm]	LOCK STOP $R_{lat,k\ steel}$ [kN]
LOCKT1880 **LOCKTEVO1880**	18 x 80	2 + 2 - Ø5 x 50 2 + 2 - Ø5 x 70	-	**-**	1 - LOCKSTOP5U	**0,2**
LOCKT3580 **LOCKTEVO3580**	35 x 80	4 + 4 - Ø5 x 50 4 + 4 - Ø5 x 70	1 - Ø5 x 50	**1,0** **1,3**	2 - LOCKSTOP5 1 - LOCKSTOP35	**0,2** **0,7**
LOCKT35100 **LOCKTEVO35100**	35 x 100	6 + 6 - Ø5 x 50 6 + 6 - Ø5 x 70	1 - Ø5 x 50	**1,3** **1,8**	2 - LOCKSTOP5 1 - LOCKSTOP35	**0,2** **0,7**
LOCKT35120 **LOCKTEVO35120**	35 x 120	8 + 8 - Ø5 x 50 8 + 8 - Ø5 x 70	1 - Ø5 x 50	**1,8** **2,1**	4 - LOCKSTOP5 2 - LOCKSTOP35	**0,5** **1,4**
LOCKT53120 **LOCKTEVO53120**	53 x 120	12 + 12 - Ø5 x 50 12 + 12 - Ø5 x 70	1 - Ø5 x 50	**2,1** **2,1**	4 - LOCKSTOP5	**0,5**

NOTES

The structural values given in the table are valid for fastening on the main beam and column. Screws on a column must be inserted with pre-drilling holes, with the exception of the inclined screw.

GENERAL PRINCIPLES

For the GENERAL PRINCIPLES of calculation, see page 27.

STRUCTURAL VALUES | TIMBER-TO-TIMBER | F_{lat}

column routing

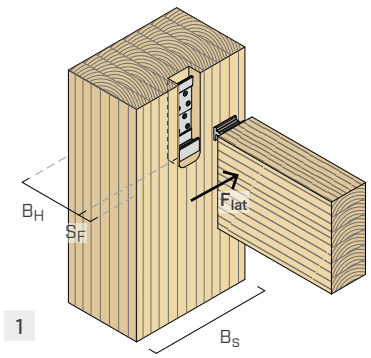

1

primary beam routing

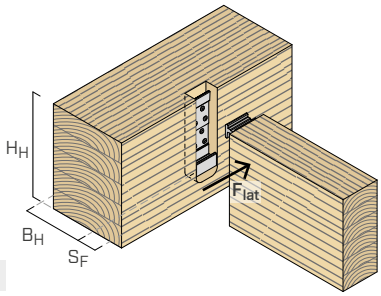

2

secondary beam routing

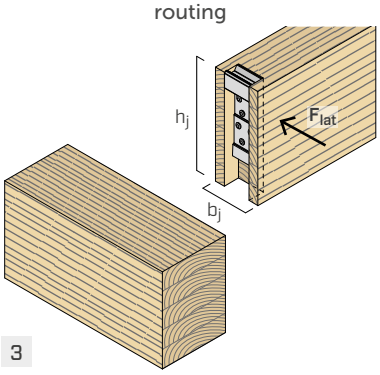

3

connector	B x H [mm]	fasteners screw LBS | LBS EVO $n_H + n_j$ - Ø x L [mm]	$R_{lat,k\ timber}$ column routing(1) B_S x B_H [mm]	1 [kN]	$R_{lat,k\ timber}$ primary beam routing B_H x H_H [mm]	2 [kN]	$R_{lat,k\ timber}$ secondary beam routing(2) b_j x h_j [mm]	3 [kN]
LOCKT1880	18 x 80	2 + 2 - Ø5 x 50	60 x 50	**0,5**	50 x 95	**0,5**	60 x 80	**1,1**
LOCKTEVO1880		2 + 2 - Ø5 x 70	60 x 70	**0,7**	70 x 95	**0,7**		**1,3**
LOCKT3580	35 x 80	4 + 4 - Ø5 x 50	80 x 50	**1,2**	50 x 95	**1,9**	80 x 80	**2,5**
LOCKTEVO3580		4 + 4 - Ø5 x 70	80 x 70	**1,2**	70 x 95	**2,4**		**2,5**
LOCKT35100	35 x 100	6 + 6 - Ø5 x 50	80 x 50	**1,5**	50 x 115	**2,9**	80 x 100	**3,1**
LOCKTEVO35100		6 + 6 - Ø5 x 70	80 x 70	**1,5**	70 x 115	**3,7**		**3,1**
LOCKT35120	35 x 120	8 + 8 - Ø5 x 50	80 x 50	**1,8**	50 x 135	**4,3**	80 x 120	**3,7**
LOCKTEVO35120		8 + 8 - Ø5 x 70	80 x 70	**1,8**	70 x 135	**5,6**		**3,7**
LOCKT53120	53 x 120	12 + 12 - Ø5 x 50	100 x 50	**1,8**	50 x 135	**7,6**	100 x 120	**3,7**
LOCKTEVO53120		12 + 12 - Ø5 x 70	100 x 70	**1,8**	70 x 135	**9,5**		**3,7**

STRUCTURAL VALUES | TIMBER-TO-TIMBER | F_{ax}

beam

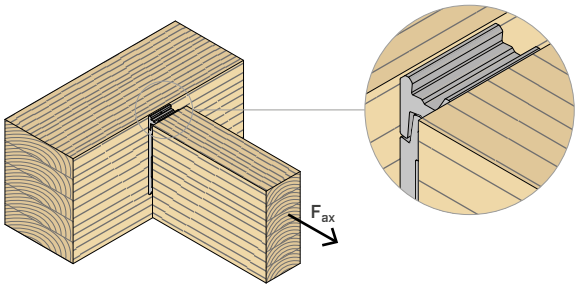

column

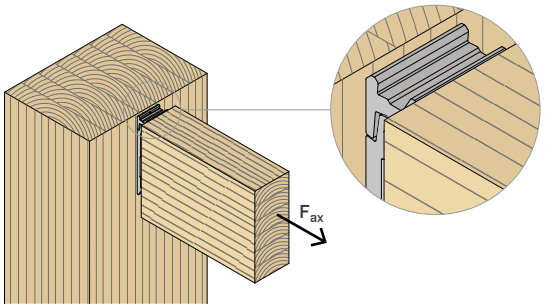

connector	B x H [mm]	fasteners screw LBS | LBS EVO $n_H + n_j$ - Ø x L [mm]	$R_{ax,k\ timber}$ C24 [kN]	GL24h [kN]	C50 [kN]
LOCKT1880	18 x 80	2 + 2 - Ø5 x 50	**1,1**	**1,1**	**1,3**
LOCKTEVO1880		2 + 2 - Ø5 x 70	**1,6**	**1,7**	**1,8**
LOCKT3580	35 x 80	4 + 4 - Ø5 x 50	**2,1**	**2,3**	**2,5**
LOCKTEVO3580		4 + 4 - Ø5 x 70	**3,1**	**3,4**	**3,7**
LOCKT35100	35 x 100	6 + 6 - Ø5 x 50	**2,6**	**2,9**	**3,1**
LOCKTEVO35100		6 + 6 - Ø5 x 70	**3,9**	**4,2**	**4,6**
LOCKT35120	35 x 120	8 + 8 - Ø5 x 50	**2,9**	**3,1**	**3,4**
LOCKTEVO35120		8 + 8 - Ø5 x 70	**4,3**	**4,6**	**5,0**
LOCKT53120	53 x 120	12 + 12 - Ø5 x 50	**4,4**	**4,8**	**5,2**
LOCKTEVO53120		12 + 12 - Ø5 x 70	**6,4**	**6,9**	**7,6**

NOTES

(1) The screws must be installed in the column with pre-drilled holes.

(2) Strength values can be accepted as valid, for higher safety standards, for fastening on column.

GENERAL PRINCIPLES

For the GENERAL PRINCIPLES of calculation, see page 27.

MOUNTING

VIDEO

EXPOSED INSTALLATION WITH LOCK STOP

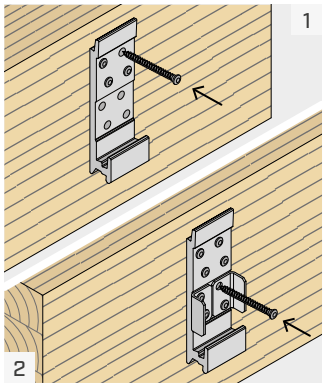

Place the connector on the main element and fasten the upper screws. When using LOCK STOP, position LOCK STOP and fasten the remaining screws.

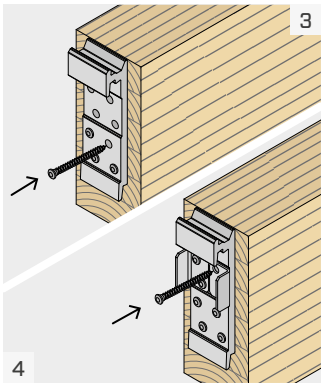

Place the connector on the secondary beam and fasten the lower screws. When using LOCK STOP, position LOCK STOP and fasten the remaining screws.

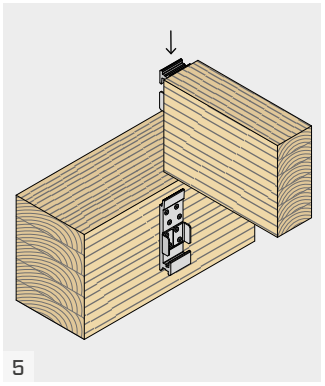

Hang the secondary beam from the main member by lowering it into place. Make sure that the two LOCK connectors are parallel to each other and avoid subjecting them to excessive strain during installation.

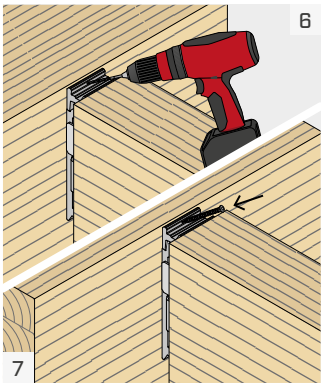

It is possible to install an uplift screw for F_{up} by drilling one hole Ø5 inclined at 45° in the upper part of the connector. A Ø5 screw must be installed in the hole.

CONCEALED INSTALLATION

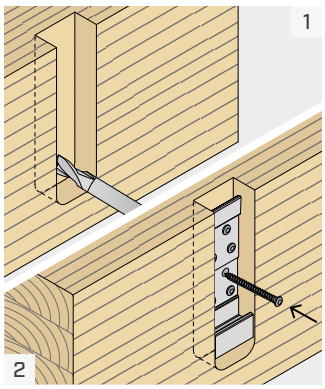

Carry out the routing on the main element. Place the connector on the main element and fasten all screws.

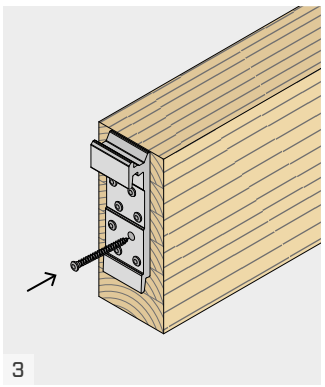

Place the connector on the secondary beam and fasten all screws.

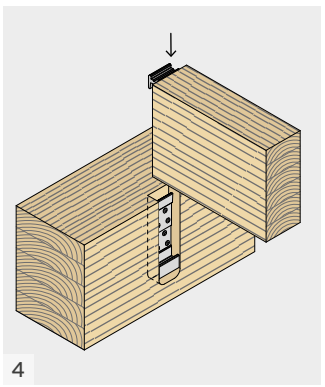

Hang the secondary beam from the main member by lowering it into place. Make sure that the two LOCK connectors are parallel to each other and avoid subjecting them to excessive strain during installation.

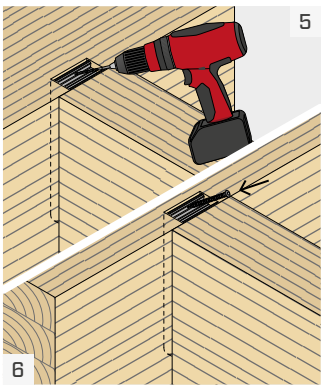

It is possible to install an uplift screw for F_{up} by drilling one hole Ø5 inclined at 45° in the upper part of the connector. A Ø5 screw must be installed in the hole.

SEMI-CONCEALED INSTALLATION - CONNECTOR VISIBLE FROM BELOW

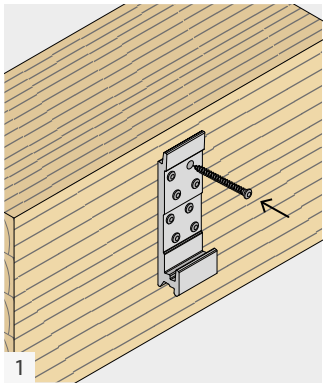

Place the connector on the main element and fasten all screws.

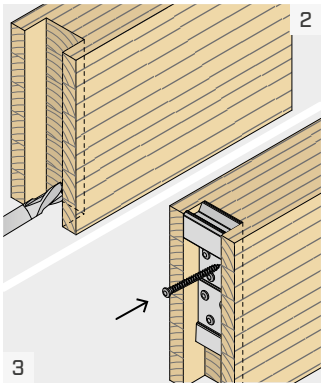

Cut a full depth routing on the secondary beam. Position the connector and fasten all screws.

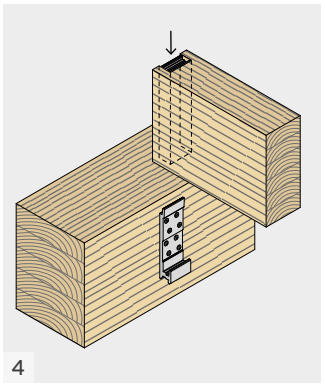

Hang the secondary beam from the main member by lowering it into place.
Make sure that the two LOCK connectors are parallel to each other and avoid subjecting them to excessive strain during installation.

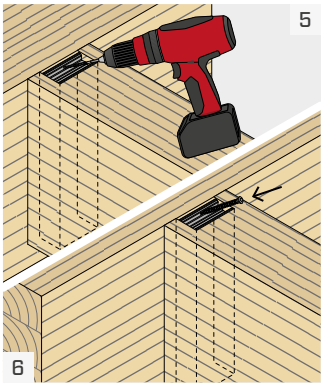

It is possible to install an uplift screw for F_{up} by drilling one hole Ø5 inclined at 45° in the upper part of the connector. A Ø5 screw must be installed in the hole.

COUPLED LOCK T MINI INSTALLATION

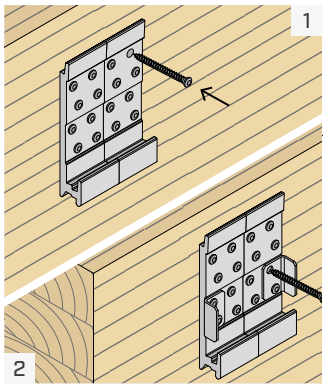

Place the connectors on the main element and fasten the top screws, making sure the connectors are aligned with each other. When using LOCK STOP, position LOCK STOP and fasten the remaining screws.

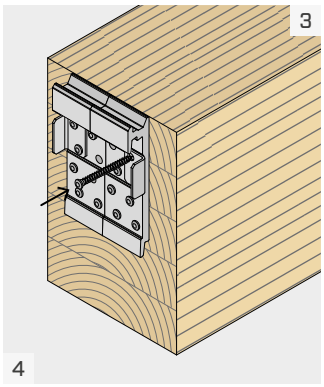

Place the connectors on the secondary beam and fasten the lower screws, making sure the connectors are aligned with each other. When using LOCK STOP, position LOCK STOP and fasten the remaining screws.

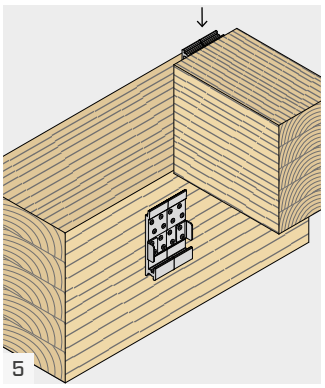

Hang the secondary beam from the main member by lowering it into place. Make sure that the LOCK connectors are parallel to each other and avoid subjecting them to excessive strain during installation.

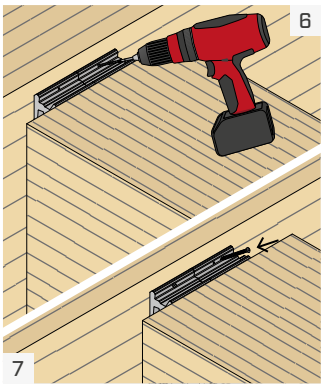

It is possible to install an uplift screw for F_{up} by drilling one hole Ø5 inclined at 45° in the upper part of the connector. A Ø5 screw must be installed in the hole.

GENERAL PRINCIPLES

- Dimensioning and verification of the timber elements must be carried out separately. In particular, for loads perpendicular to the beam axis, it is recommended to perform a splitting check in both wooden elements.
- If coupled connectors are used, special care must be taken in alignment during installation to avoid different stresses in the two connectors.
- The connector must always be fully fastened using all the holes.
- Fastening with partial nailing. Screws with the same length must be used for each connector half.
- Screws must always be inserted with pre-drilling holes in the column.
- Screws must be inserted with pre-drilling hole on main or secondary beam with density $\rho_k > 420$ kg/m^3.
- Structural values are calculated assuming a constant thickness of the metal element, including the thickness of the LOCK STOP.
- The coefficients k_{mod} and γ_M should be taken according to the current regulations used for the calculation.
- The following verification shall be satisfied for combined loading:

$$\left(\frac{F_{ax,d}}{R_{ax,d}}\right)^2 + \left(\frac{F_{v,d}}{R_{v,d}}\right)^2 + \left(\frac{F_{up,d}}{R_{up,d}}\right)^2 + \left(\frac{F_{lat,d}}{R_{lat,d}}\right)^2 \leq 1$$

$F_{v,d}$ and $F_{up,d}$ are forces acting in opposite directions. Therefore only one of the forces $F_{v,d}$ and $F_{up,d}$ can act in combination with the forces $F_{ax,d}$ or $F_{lat,d}$.

STRUCTURAL VALUES | F_{lat}

- Characteristic values calculated according to EN 1995:2014 and ETA-19/0831 for screws without pre-drilling hole and C24 timber elements with density of $\rho_k = 350$ kg/m^3 .
- Special care must be taken in the execution of cutting the routing in the main element or secondary beam to limit the lateral sliding of the connection.
- The configurations for F_{lat} strength (column routing, primary beam routing, secondary beam routing, LOCK STOP and inclined screw) have different stiffness levels. Therefore, combining two or more configurations in order to increase the strength is not allowed.
- Design values can be obtained from characteristic values as follows:

housing in the column, primary beam or secondary beam and inclined screw

$$R_{lat,d} = \frac{R_{lat,k\ timber} \cdot k_{mod}}{\gamma_M}$$

LOCK STOP

$$R_{lat,d} = \frac{R_{lat,k\ steel}}{\gamma_{M2}}$$

where:

- γ_{M2} Is the partial safety coefficient of steel material according to EN 1993.

STRUCTURAL VALUES | F_v | F_{up} | F_{ax}

- C24 and GL24h: Characteristic values calculated according to EN 1995:2014 and ETA-19/0831 for screws without pre-drilling hole on secondary beam and screws with pre-drilling hole on column. $\rho_k = 350$ kg/m^3 for C24 and $\rho_k = 385$ kg/m^3 for GL24h have been considered for calculations.
- C50: characteristic values calculated according to EN 1995:2014 and ETA-19/0831 for screws with pre-drilling hole. ρ_k=430 kg/m^3 has been taken in consideration in the calculation.
- Design values can be obtained from characteristic values as follows:

$$R_{v,d} = min \begin{cases} \frac{R_{v,k\ timber} \cdot k_{mod}}{\gamma_M} \\ \frac{R_{v,k\ alu}}{\gamma_{M2}} \end{cases}$$

$$R_{up,d} = \frac{R_{up,k\ timber} \cdot k_{mod}}{\gamma_M}$$

$$R_{ax,d} = \frac{R_{ax,k\ timber} \cdot k_{mod}}{\gamma_M}$$

where:

- γ_{M2} is the partial safety coefficient of the aluminium material subject to tensile stress, to be taken according to the national standards used for calculation. If there are no other provisions, it is suggested to use the value provided by EN 1999-1-1, equal to $\gamma_{M2} = 1.25$.
- For configurations for which only the timber-side strength is reported, the aluminium-side overstrength can be assumed.

CONNECTION STIFFNESS | F_v

- Connection stiffness can be calculated according to ETA-19/0831, with the following equation:

$$K_{v,ser} = \frac{n \cdot \rho_m^{1.5} \cdot d^{0.8}}{30} \quad N/mm$$

where:

- d is the nominal diameter of the screw in the secondary beam, in mm;
- ρ_m is the average density of the secondary beam, in kg/m^3;
- n is the number of screws in the secondary beam.

INTELLECTUAL PROPERTY

- Some models of LOCK T MINI are protected by the following Registered Community Designs: RCD 008254353-0005 | RCD 008254353-0006 | RCD 008254353-0007 | RCD 008254353-0008 | RCD 008254353-0009.

LOCK T MIDI

CONCEALED TIMBER-TO-TIMBER CONNECTOR

VIDEO

CALCULATION TOOL

DESIGN REGISTERED

CE ETA-19/0831

SERVICE CLASS

SC1 SC2 SC3

For information on the application areas of with reference to environment service class, atmospheric corrosivity class and timber corrosion class, refer to the website www.rothoblaas.com.

MATERIAL

alu 6005A EN AW-6005A aluminium alloy

alu 6005A EVO version with special paint in graphite black colour

EXTERNAL LOADS

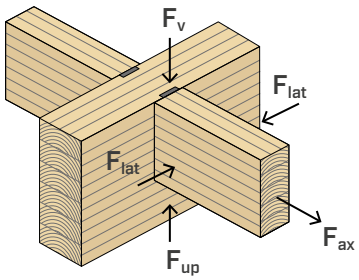

VIDEO

Scan the QR Code and watch the video on our YouTube channel

POST AND BEAM

Ideal for carports, pergolas, canopies or post-and-beam structures. It can also be used concealed with wooden elements having small cross-section.

OUTDOOR

For outdoor use (Service class 3). The correct choice of screw enables all fastening requirements to be met, even in aggressive environments.

WIND AND EARTHQUAKE

Certified strengths in all load directions, for safe fastening even under lateral, axial and lifting forces.

USA, Canada and more design values available online.





FIELDS OF USE

Concealed beam joint in timber-to-timber configuration, suitable for medium-sized structures, floors and roofs. Resistant outdoors, with the coated EVO version also in aggressive environments.

Can be applied to:

- solid timber softwood and hardwood
- glulam, LVL





INCLINED BEAMS

Also suitable for installation on inclined beams, with both horizontal and vertical inclination. The post-and-beam connector can be preassembled on the beam without adding screws at the construction site.

TOLERANCE

By using two connectors of different widths, an exceptional lateral tolerance value can be achieved, e.g. in the case of ribbed floors where the ribs are constrained to the panel.

CODES AND DIMENSIONS

LOCK T MIDI-LOCK T MIDI EVO

1 3 5 6 10 14

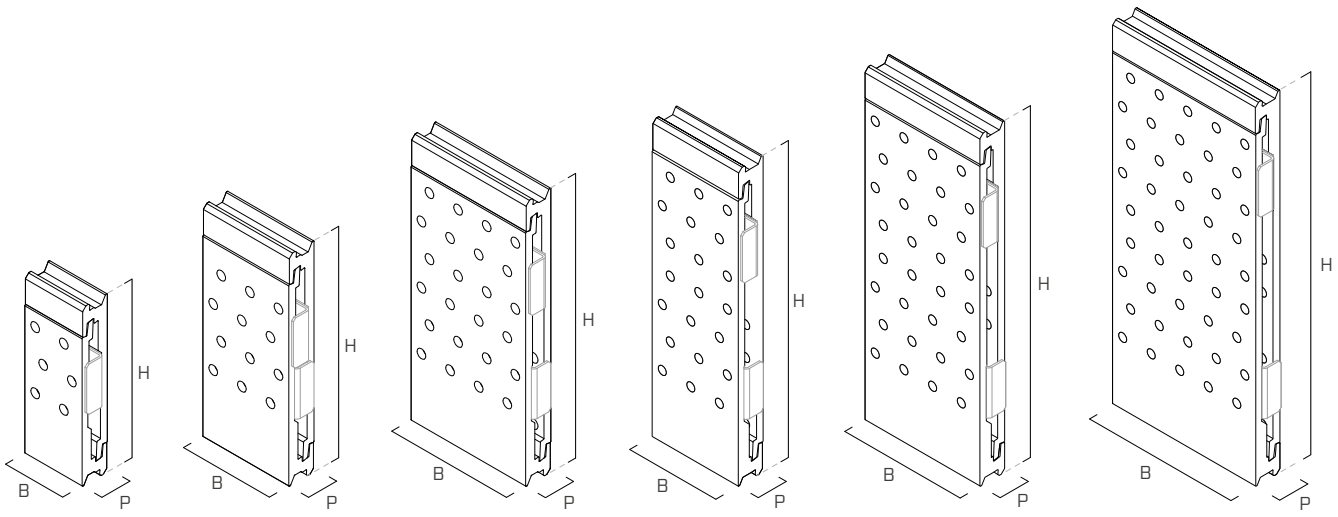

	CODE		B	H	P	*B*	*H*	*P*	n_{screw} x Ø(1)	$n_{LOCKSTOP}$ x type(2)		pcs.(3)
	LOCK T MIDI	LOCK T MIDI EVO	[mm]	[mm]	[mm]	*[in]*	*[in]*	*[in]*	[pcs]			
1	**LOCKT50135**	**LOCKTEVO50135**	50	135	22	*1 15/16*	*5 5/16*	*0.87*	12 x Ø7 | *0.28*	2 x LOCKSTOP7 1 x LOCKSTOP50	●	25
2	**LOCKT50175**	**LOCKTEVO50175**	50	175	22	*1 15/16*	*6 7/8*	*0.87*	16 x Ø7 | *0.28*	4 x LOCKSTOP7 2 x LOCKSTOP50	●	18
3	**LOCKT75175**	**LOCKTEVO75175**	75	175	22	*2 15/16*	*6 7/8*	*0.87*	24 x Ø7 | *0.28*	4 x LOCKSTOP7 2 x LOCKSTOP75	●	12
4	**LOCKT75215**	**LOCKTEVO75215**	75	215	22	*2 15/16*	*8 7/16*	*0.87*	36 x Ø7 | *0.28*	4 x LOCKSTOP7 2 x LOCKSTOP75	●	12
5	**LOCKT100215**	**LOCKTEV100215**	100	215	22	*4*	*8 7/16*	*0.87*	48 x Ø7 | *0.28*	4 x LOCKSTOP7 2 x LOCKSTOP100	●	8
6	**LOCKT75240**	**LOCKTEV75240**	75	240	22	*2 15/16*	*9 1/2*	*0.87*	42 x Ø7 | *0.28*	4 x LOCKSTOP7 2 x LOCKSTOP75	●	20
7	**LOCKT100240**	**LOCKTEV100240**	100	240	22	*4*	*9 1/2*	*0.87*	56 x Ø7 | *0.28*	4 x LOCKSTOP7 2 x LOCKSTOP100	●	10
8	**LOCKT125240**	**LOCKTEV125240**	125	240	22	*4 15/16*	*9 1/2*	*0.87*	70 x Ø7 | *0.28*	4 x LOCKSTOP7 2 x LOCKSTOP125	●	10
9	**LOCKT75265**	**LOCKTEV75265**	75	265	22	*2 15/16*	*10 7/16*	*0.87*	48 x Ø7 | *0.28*	4 x LOCKSTOP7 2 x LOCKSTOP75	●	20
10	**LOCKT100265**	**LOCKTEV100265**	100	265	22	*4*	*10 7/16*	*0.87*	64 x Ø7 | *0.28*	4 x LOCKSTOP7 2 x LOCKSTOP100	●	10
11	**LOCKT125265**	**LOCKTEV125265**	125	265	22	*4 15/16*	*10 7/16*	*0.87*	80 x Ø7 | *0.28*	4 x LOCKSTOP7 2 x LOCKSTOP125	●	10
12	**LOCKT75290**	**LOCKTEV75290**	75	290	22	*2 15/16*	*11 7/16*	*0.87*	54 x Ø7 | *0.28*	4 x LOCKSTOP7 2 x LOCKSTOP75	●	20
13	**LOCKT100290**	**LOCKTEV100290**	100	290	22	*4*	*11 7/16*	*0.87*	72 x Ø7 | *0.28*	4 x LOCKSTOP7 2 x LOCKSTOP100	●	10
14	**LOCKT125290**	**LOCKTEV125290**	125	290	22	*4 15/16*	*11 7/16*	*0.87*	90 x Ø7 | *0.28*	4 x LOCKSTOP7 2 x LOCKSTOP125	●	10

Screws and LOCK STOP are not included in the package.
(1) Number of screws for connector pairs.
(2) The LOCK STOP installation options are indicated on page 34.
(3) Number of connector pairs.

LOCK STOP | LOCKING DEVICE FOR F_{lat}

1

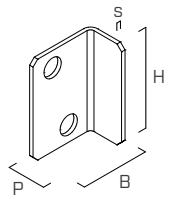

2

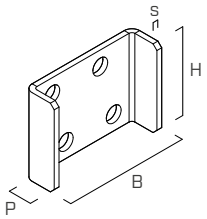

3

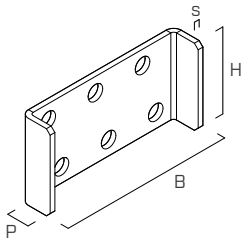

4

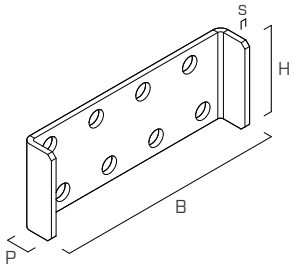

5

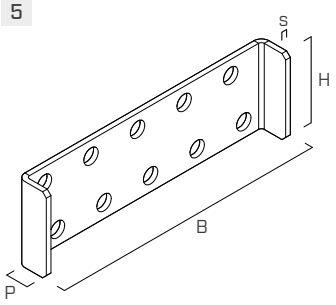

	CODE	description	B [mm]	H [mm]	P [mm]	s [mm]	*B [in]*	*H [in]*	*P [in]*	*s [in]*	pcs
1	**LOCKSTOP7(*)**	carbon steel DX51D+Z275	26,5	38	15,0	1,5	*1 1/16*	*1 1/2*	*9/16*	*0.06*	50
2	**LOCKSTOP50**	stainless steel A2 | AISI 304	56	40	15,5	2,5	*2 3/16*	*1 9/16*	*5/8*	*0.10*	40
3	**LOCKSTOP75**	stainless steel A2 | AISI 304	81	40	15,5	2,5	*3 3/16*	*1 9/16*	*5/8*	*0.10*	20
4	**LOCKSTOP100**	stainless steel A2 | AISI 304	106	40	15,5	2,5	*4 3/16*	*1 9/16*	*5/8*	*0.10*	20
5	**LOCKSTOP125**	stainless steel A2 | AISI 304	131	40	15,5	2,5	*5 3/16*	*1 9/16*	*5/8*	*0.10*	20

(*) Not holding CE marking.

INSTALLATION METHODS

CORRECT INSTALLATION

Install the beam by lowering it from the top, without tilting it. Ensure proper seating and coupling of the connector at both the top and bottom, as shown in the figure.

INCORRECT INSTALLATION

Partial and incorrect coupling of the connector. Ensure that both flanges of the connector are properly seated in their respective seats.

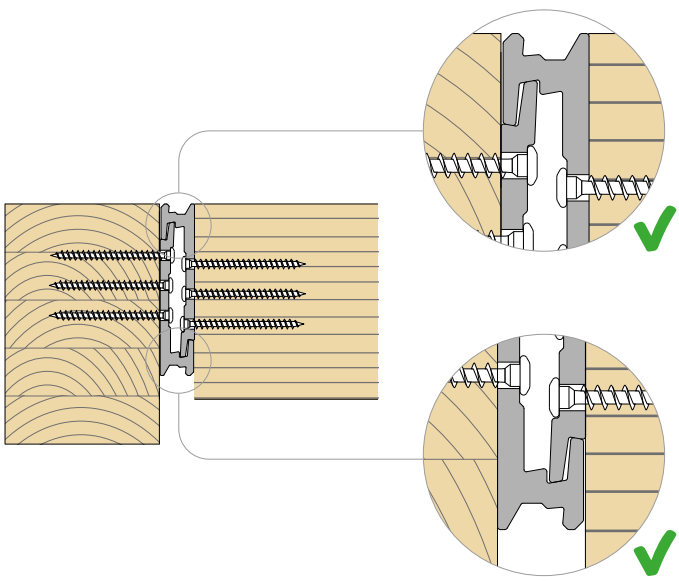

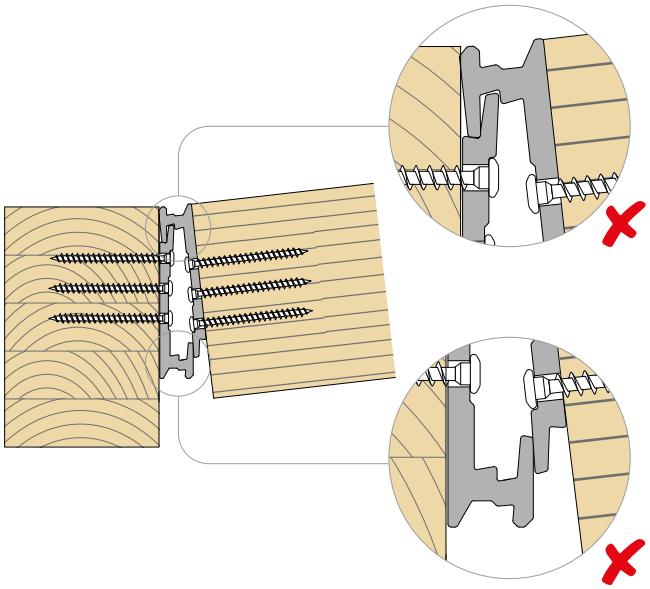

FASTENERS

type	description		d [mm]	support	page
LBS	round head screw	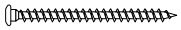	7		571
LBS EVO	C4 EVO round head screw	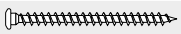	7		571
LBS HARDWOOD EVO	C4 EVO round head screw on hardwoods		7		572
HBS PLATE EVO	C4 EVO pan head screw	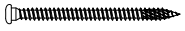	6		573
KKF AISI410	pan head screw		6		574

INSTALLATION | LOCK T MIDI-LOCK T MIDI EVO

EXPOSED INSTALLATION ON COLUMN

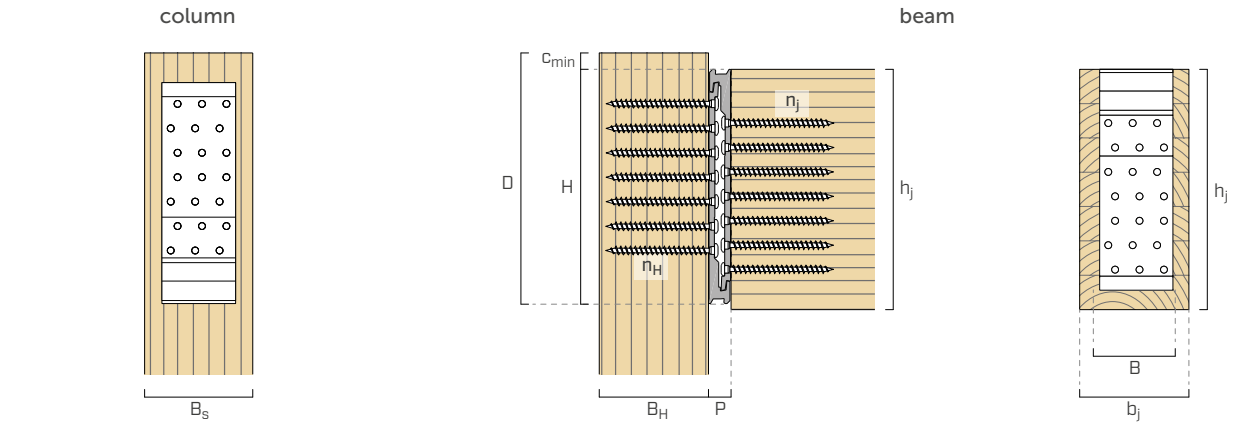

CONCEALED INSTALLATION ON BEAM

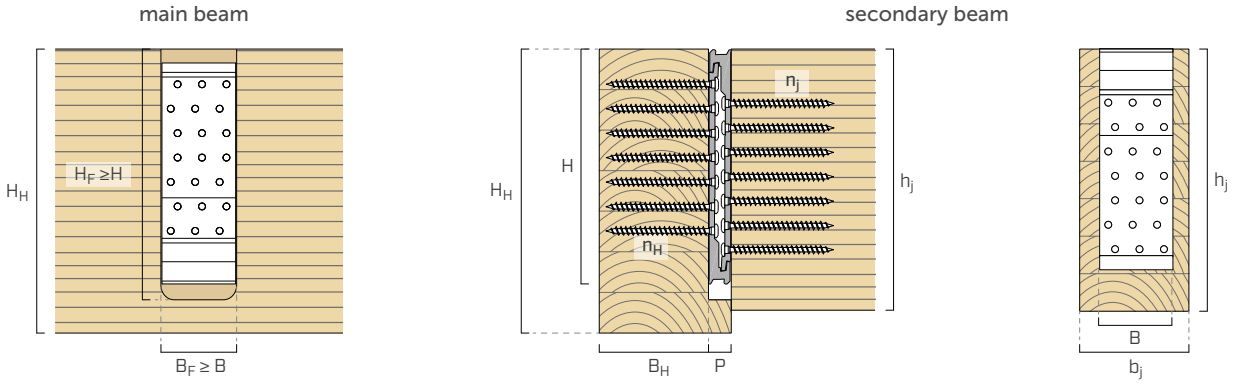

The H_F dimension refers to the minimum height of the routing at constant width. The radius of the milling tool must be taken into account when cutting the routing.

CONNECTOR POSITIONING

CODE		c_{min} [mm]	D [mm]
LOCKT50135	**LOCKTEVO50135**	15	150
LOCKT50175	**LOCKTEVO50175**	5	180
LOCKT75175	**LOCKTEVO75175**	5	180
LOCKT75215	**LOCKTEVO75215**	15	230
LOCKT100215	**LOCKTEV100215**	15	230
LOCKT75240	**LOCKTEV75240**	15	255
LOCKT100240	**LOCKTEV100240**	15	255
LOCKT125240	**LOCKTEV125240**	15	255
LOCKT75265	**LOCKTEV75265**	15	280
LOCKT100265	**LOCKTEV100265**	15	280
LOCKT125265	**LOCKTEV125265**	15	280
LOCKT75290	**LOCKTEV75290**	15	305
LOCKT100290	**LOCKTEV100290**	15	305
LOCKT125290	**LOCKTEV125290**	15	305

The connector on column must be lowered by an amount c_{min} from the top of the beam to meet the minimum distance of the screws from the unloaded end of the column. It is recommended to use dimension "D" for positioning the connector on column.
Alignment between the top of column and beam can be achieved by lowering the connector by an amount c_{min} relative to the top of beam (minimum beam height hj + c_{min}).

INSTALLATION | LOCK T MIDI-LOCK T MIDI EVO

connector	B x H	fasteners LBS | LBS EVO $n_H + n_j$ - Ø x L	main element column[1] B_S x B_H	main element beam B_H x H_H	secondary beam b_j x h_j with pre-drilling hole	secondary beam b_j x h_j without pre-drilled hole
	[mm]	[mm]	[mm]	[mm]	[mm]	[mm]
LOCKT50135 LOCKTEVO50135	50 x 135	6 + 6 - Ø7 x 80	74 x 80	80 x 155	74 x 135	80 x 140[2]
LOCKT50175 LOCKTEVO50175	50 x 175	8 + 8 - Ø7 x 80	74 x 80	80 x 190	74 x 175	80 x 175
LOCKT75175 LOCKTEVO75175	75 x 175	12 + 12 - Ø7 x 80	99 x 80	80 x 190	99 x 175	105 x 175
LOCKT75215 LOCKTEVO75215	75 x 215	18 + 18 - Ø7 x 80	99 x 80	80 x 230	99 x 215	105 x 215
LOCKT100215 LOCKTEV100215	100 x 215	24 + 24 - Ø7 x 80	124 x 80	80 x 230	124 x 215	130 x 215
LOCKT75240 LOCKTEV75240	75 x 240	21 + 21 - Ø7 x 80	99 x 80	80 x 255	99 x 240	105 x 240
LOCKT100240 LOCKTEV100240	100 x 240	28 + 28 - Ø7 x 80	124 x 80	80 x 255	124 x 240	130 x 240
LOCKT125240 LOCKTEV125240	125 x 240	35 + 35 - Ø7 x 80	149 x 80	80 x 255	149 x 240	155 x 240
LOCKT75265 LOCKTEV75265	75 x 265	24 + 24 - Ø7 x 80	99 x 80	80 x 280	99 x 265	105 x 265
LOCKT100265 LOCKTEV100265	100 x 265	32 + 32 - Ø7 x 80	124 x 80	80 x 280	124 x 265	130 x 265
LOCKT125265 LOCKTEV125265	125 x 265	40 + 40 - Ø7 x 80	149 x 80	80 x 280	149 x 265	155 x 265
LOCKT75290 LOCKTEV75290	75 x 290	27 + 27 - Ø7 x 80	99 x 80	80 x 305	99 x 290	105 x 290
LOCKT100290 LOCKTEV100290	100 x 290	36 + 36 - Ø7 x 80	124 x 80	80 x 305	124 x 290	130 x 290
LOCKT125290 LOCKTEV125290	125 x 290	45 + 45 - Ø7 x 80	149 x 80	80 x 305	149 x 290	155 x 290
2 x LOCKT50135 2 x LOCKTEVO50135	100 x 135[3]	12 + 12 - Ø7 x 80	124 x 80	80 x 155	124 x 135	130 x 140[2]
2 x LOCKT50175 2 x LOCKTEVO50175	100 x 175[3]	16 + 16 - Ø7 x 80	124 x 80	80 x 190	124 x 175	130 x 175
1 x LOCKT75175 + 1 x LOCKT50175 1 x LOCKTEVO75175 + 1 x LOCKTEVO50175	125 x 175[3]	20 + 20 - Ø7 x 80	149 x 80	80 x 190	149 x 175	155 x 175
2 x LOCKT75215 2 x LOCKTEVO75215	150 x 215[3]	36 + 36 - Ø7 x 80	174 x 80	80 x 230	174 x 215	180 x 215
1 x LOCKT100215 + 1 x LOCKT75215 1 x LOCKTEV100215 + 1 x LOCKTEVO75215	175 x 215[3]	42 + 42 - Ø7 x 80	199 x 80	80 x 230	199 x 215	205 x 215

[1] The screws must be installed in the column with pre-drilled holes.
[2] In case of installation without pre-drilled holes, the connector must be installed 5 mm lower than the top of secondary beam, in order to respect the minimum distances of the screws.
[3] Measurement obtained by coupling two connectors with the same height H. For example, LOCK T 100 x 135 mm is obtained by placing two LOCK T 50 x 135 mm connectors side by side.

INSTALLATION | LOCK STOP ON LOCK T MIDI

LOCKT50135 +
2 x LOCKSTOP7

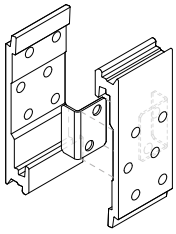

LOCKT75175 +
4 x LOCKSTOP7

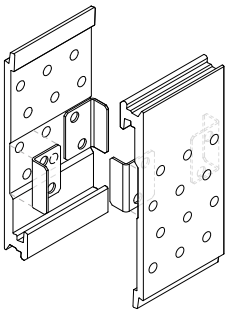

LOCKT100265 +
2 x LOCKSTOP100

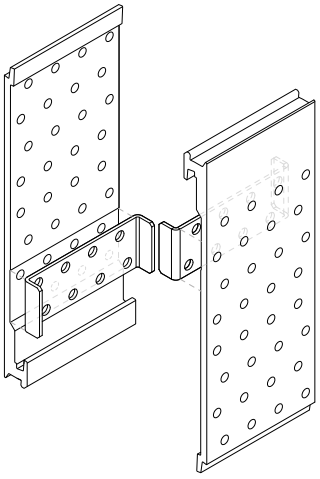

LOCKT125290 +
2 x LOCKSTOP125

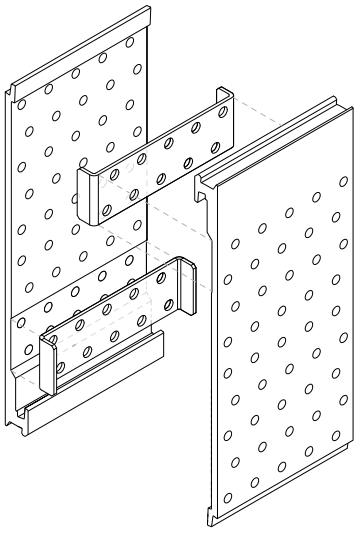

LOCK STOP| assembly

connector[1]		assembly configurations				
	B x H	LOCKSTOP7	LOCKSTOP50	LOCKSTOP75	LOCKSTOP100	LOCKSTOP125
	[mm]	[pcs]	[pcs]	[pcs]	[pcs]	[pcs]
LOCKT50135	50 x 135	x 2	x 1	-	-	-
LOCKT50175	50 x 175	x 4	x 2	-	-	-
LOCKT75175	75 x 175	x 4	-	x 2	-	-
LOCKT75215	75 x 215	x 4	-	x 2	-	-
LOCKT75240	75 x 240	x 4	-	x 2	-	-
LOCKT75265	75 x 265	x 4	-	x 2	-	-
LOCKT75290	75 x 290	x 4	-	x 2	-	-
LOCKT100215	100 x 215	x 4	-	-	x 2	-
LOCKT100240	100 x 240	x 4	-	-	x 2	-
LOCKT100265	100 x 265	x 4	-	-	x 2	-
LOCKT100290	100 x 290	x 4	-	-	x 2	-
LOCKT125240	125 x 240	x 4	-	-	-	x 2
LOCKT125265	125 x 265	x 4	-	-	-	x 2
LOCKT125290	125 x 290	x 4	-	-	-	x 2

INSTALLATION | LOCK STOP ON LOCK T MIDI COUPLED

LOCK STOP| assembly

connector[1]		assembly configurations		
	B x H	LOCKSTOP7	LOCKSTOP100	LOCKSTOP125
	[mm]	[pcs]	[pcs]	[pcs]
LOCKT100135 (LOCKT50135 + LOCKT50135)	100 x 135	2	1	-
LOCKT100175 (LOCKT50175 + LOCKT50175)	100 x 175	4	2	-
LOCKT125175 (LOCKT50175 + LOCKT75175)	125 x 175	4	-	2
LOCKT150215 (LOCKT75215 + LOCKT75215)	150 x 215	4	-	-
LOCKT175215 (LOCKT75215 + LOCKT100215)	175 x 215	4	-	-

NOTES

[1] Configurations are valid for LOCK T MIDI EVO connectors.

OPTIONAL INCLINED SCREW

45° inclined holes must be drilled on site using a 5 mm diameter and metal drill bit. The image shows the positions for the optional inclined holes.

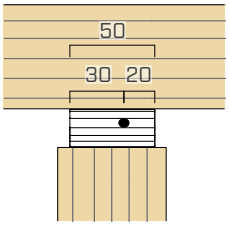

LOCKT50135 |
LOCKTEV050135

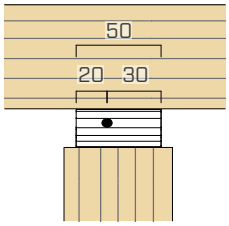

LOCKT50175 |
LOCKTEV050175

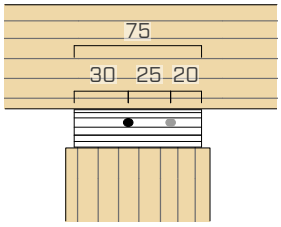

LOCKT75240 | LOCKTEV075240
LOCKT75290 | LOCKTEV075290

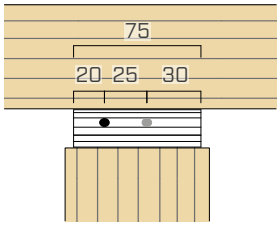

LOCKT75175 | LOCKTEV075175
LOCKT75215 | LOCKTEV075215
LOCKT75265 | LOCKTEV75265

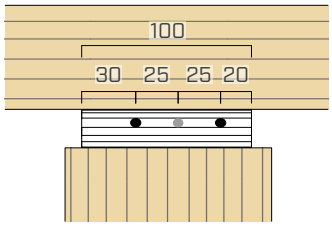

LOCKT100240 | LOCKTEV100240
LOCKT100290 | LOCKTEV100290

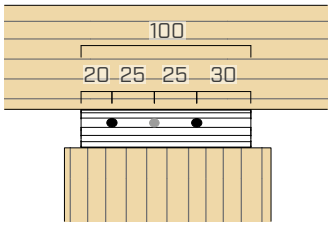

LOCKT100215 | LOCKTEV100215
LOCKT100265 | LOCKTEV100265

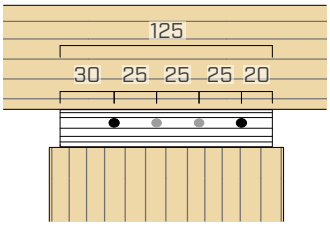

LOCKT125240 | LOCKTEV125240
LOCKT125290 | LOCKTEV125290

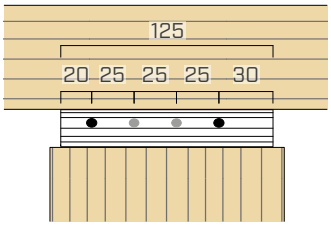

LOCKT125265 | LOCKTEV125265

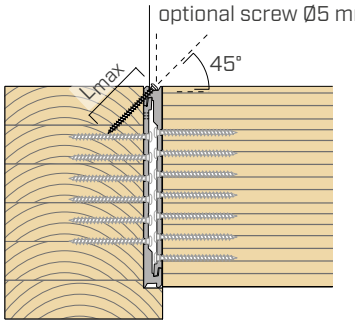

● inclined screws for F_{lat} strength
● + ● inclined screws for F_{up} strength

MY PROJECT
calculation software

Discover how to design simply, quickly and intuitively!

MyProject is the practical and reliable software created for professionals who design timber structures: it allows for the design of a broad range or connections, carry out thermo-hygrometric analysis of opaque components and designing the most appropriate acoustic solution. The program provides detailed instructions and explanatory illustrations for the products installation.

Simplify your work, **generate complete calculation reports** thanks to MyProject.

Download it now and start designing!

rothoblaas.com



STRUCTURAL VALUES | TIMBER-TO-TIMBER | F_v | F_{up}

beam

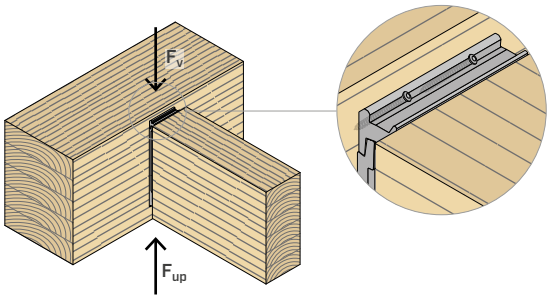

column

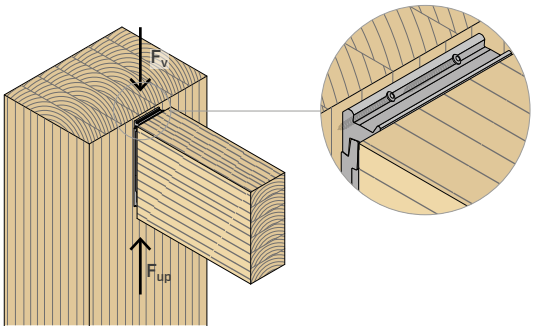

connector	B x H	fasteners screw LBS | LBS EVO $n_H + n_j$ - Ø x L	$R_{v,k}$ timber			$R_{v,k}$ alu	fasteners 45° screws LBS | LBS EVO $n_H + n_j$ - Ø x L	$R_{up,k}$ timber
			GL24h	C50	LVL			GL24h
	[mm]	[mm]	[kN]	[kN]	[kN]	[kN]	[mm]	[kN]
LOCKT50135 LOCKTEVO50135	50 x 135	6 + 6 - Ø7 x 80	**16,2**	**19,9**	**15,8**	**30**	1 - Ø5x70	**3,2**
LOCKT50175 LOCKTEVO50175	50 x 175	8 + 8 - Ø7 x 80	**21,6**	**26,6**	**21,0**	**40**	1 - Ø5x70	**3,2**
LOCKT75175 LOCKTEVO75175	75 x 175	12 + 12 - Ø7 x 80	**32,4**	**39,9**	**31,6**	**60**	2 - Ø5x70	**6,0**
LOCKT75215 LOCKTEVO75215	75 x 215	18 + 18 - Ø7 x 80	**48,3**	**59,5**	**47,1**	**60**	2 - Ø5x70	**6,0**
LOCKT100215 LOCKTEV100215	100 x 215	24 + 24 - Ø7 x 80	**64,5**	**79,3**	**62,8**	**80**	3 - Ø5x70	**8,7**
LOCKT75240 LOCKTEV75240	75 x 240	21 + 21 - Ø7 x 80	**56,4**	**69,4**	**55,0**	**72**	2 - Ø5x70	**6,0**
LOCKT100240 LOCKTEV100240	100 x 240	28 + 28 - Ø7 x 80	**75,2**	**92,5**	**73,3**	**96**	3 - Ø5x70	**8,7**
LOCKT125240 LOCKTEVO125240	125 x 240	35 + 35 - Ø7 x 80	**94,0**	**115,6**	**91,6**	**120**	4 - Ø5x70	**11,7**
LOCKT75265 LOCKTEV75265	75 x 265	24 + 24 - Ø7 x 80	**64,5**	**79,3**	**62,8**	**72**	2 - Ø5x70	**6,0**
LOCKT100265 LOCKTEVO100265	100 x 265	32 + 32 - Ø7 x 80	**85,9**	**105,7**	**83,7**	**96**	3 - Ø5x70	**8,7**
LOCKT125265 LOCKT125265	125 x 265	40 + 40 - Ø7 x 80	**107,4**	**132,2**	**104,7**	**120**	4 - Ø5x70	**11,7**
LOCKT75290 LOCKTEV75290	75 x 290	27 + 27 - Ø7 x 80	**72,5**	**89,2**	**70,7**	**72**	2 - Ø5x70	**6,0**
LOCKT100290 LOCKTEV100290	100 x 290	36 + 36 - Ø7 x 80	**96,7**	**118,9**	**94,2**	**96**	3 - Ø5x70	**8,7**
LOCKT125290 LOCKTEV125290	125 x 290	45 + 45 - Ø7 x 80	**120,8**	**148,7**	**117,8**	**120**	4 - Ø5x70	**11,7**

NOTES

The structural values given in the table are valid for fastening on the main beam and column. The screws must be installed in the column with pre-drilled holes.

GENERAL PRINCIPLES

For the GENERAL PRINCIPLES of calculation, see page 41.

STRUCTURAL VALUES | TIMBER-TO-TIMBER | F_{lat}

inclined screw

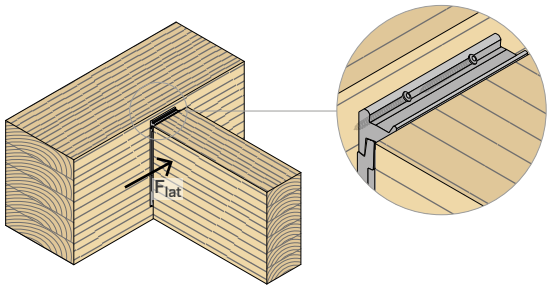

LOCK STOP

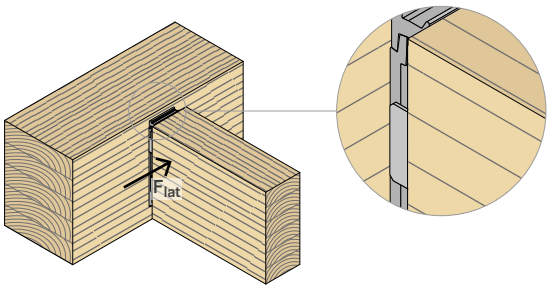

connector	B x H	inclined screw				LOCK STOP	
		fasteners screw LBS | LBS EVO $n_H + n_j$ - Ø x L	fasteners 45° screws LBS | LBS EVO $n_H + n_j$ - Ø x L	$R_{lat,k\ timber}$ main beam GL24h	$R_{lat,k\ timber}$ column GL24h	fasteners $n_{LOCKSTOP}$ - type	$R_{lat,k\ steel}$
	[mm]	[mm]	[mm]	[kN]	[kN]	[mm]	[kN]
LOCKT50135 **LOCKTEVO50135**	50 x 135	6 + 6 - Ø7 x 80	1 - Ø5x70	**2,6**	**2,2**	2 x LOCKSTOP7 1 x LOCKSTOP50	**0,3** **0,8**
LOCKT50175 **LOCKTEVO50175**	50 x 175	8 + 8 - Ø7 x 80	1 - Ø5x70	**2,6**	**2,2**	4 x LOCKSTOP7 2 x LOCKSTOP50	**0,6** **1,6**
LOCKT75175 **LOCKTEVO75175**	75 x 175	12 + 12 - Ø7 x 80	1 - Ø5x70	**2,6**	**2,2**	4 x LOCKSTOP7 2 x LOCKSTOP75	**0,6** **1,6**
LOCKT75215 **LOCKTEVO75215**	75 x 215	18 + 18 - Ø7 x 80	1 - Ø5x70	**2,6**	**2,2**	4 x LOCKSTOP7 2 x LOCKSTOP75	**0,6** **1,6**
LOCKT100215 **LOCKTEV100215**	100 x 215	24 + 24 - Ø7 x 80	2 - Ø5x70	**4,7**	**4,4**	4 x LOCKSTOP7 2 x LOCKSTOP100	**0,6** **1,6**
LOCKT75240 **LOCKTEV75240**	75 x 240	21 + 21 - Ø7 x 80	1 - Ø5x70	**2,6**	**2,2**	4 x LOCKSTOP7 2 x LOCKSTOP75	**0,6** **1,6**
LOCKT100240 **LOCKTEV100240**	100 x 240	28 + 28 - Ø7 x 80	2 - Ø5x70	**4,7**	**4,4**	4 x LOCKSTOP7 2 x LOCKSTOP100	**0,6** **1,6**
LOCKT125240 **LOCKTEVO125240**	125 x 240	35 + 35 - Ø7 x 80	2 - Ø5x70	**5,2**	**4,4**	4 x LOCKSTOP7 2 x LOCKSTOP125	**0,6** **1,6**
LOCKT75265 **LOCKTEV75265**	75 x 265	24 + 24 - Ø7 x 80	1 - Ø5x70	**2,6**	**2,2**	4 x LOCKSTOP7 2 x LOCKSTOP75	**0,6** **1,6**
LOCKT100265 **LOCKTEVO100265**	100 x 265	32 + 32 - Ø7 x 80	2 - Ø5x70	**4,7**	**4,4**	4 x LOCKSTOP7 2 x LOCKSTOP100	**0,6** **1,6**
LOCKT125265 **LOCKT125265**	125 x 265	40 + 40 - Ø7 x 80	2 - Ø5x70	**5,2**	**4,4**	4 x LOCKSTOP7 2 x LOCKSTOP125	**0,6** **1,6**
LOCKT75290 **LOCKTEV75290**	75 x 290	27 + 27 - Ø7 x 80	1 - Ø5x70	**2,6**	**2,2**	4 x LOCKSTOP7 2 x LOCKSTOP75	**0,6** **1,6**
LOCKT100290 **LOCKTEV100290**	100 x 290	36 + 36 - Ø7 x 80	2 - Ø5x70	**4,7**	**4,4**	4 x LOCKSTOP7 2 x LOCKSTOP100	**0,6** **1,6**
LOCKT125290 **LOCKTEV125290**	125 x 290	45 + 45 - Ø7 x 80	2 - Ø5x70	**5,2**	**4,4**	4 x LOCKSTOP7 2 x LOCKSTOP125	**0,6** **1,6**

NOTES

The structural values given in the table are valid for fastening on the main beam and column. Screws on a column must be inserted with pre-drilling holes, with the exception of the inclined screw.

GENERAL PRINCIPLES

For the GENERAL PRINCIPLES of calculation, see page 41.

STRUCTURAL VALUES | TIMBER-TO-TIMBER | F_{lat}

column routing

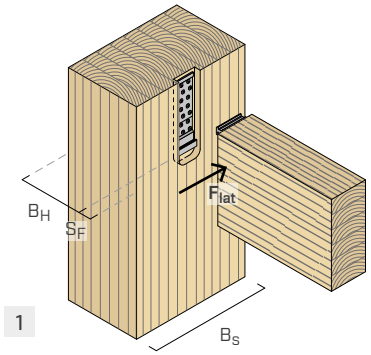

1

primary beam routing

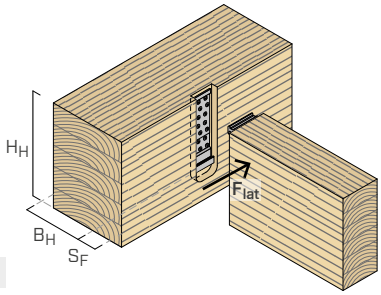

2

secondary beam routing

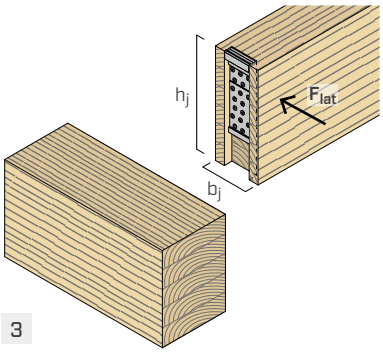

3

connector	B x H	fasteners screw LBS | LBS EVO	$R_{lat,k\ timber}$ column routing[1]		$R_{lat,k\ timber}$ primary beam routing		$R_{lat,k\ timber}$ secondary beam routing[2]	
		$n_H + n_j$ - Ø x L	B_S x B_H	1	B_H x H_H	2	b_j x h_j	3
	[mm]	[mm]	[mm]	[kN]	[mm]	[kN]	[mm]	[kN]
LOCKT50135 LOCKTEVO50135	50 x 135	6 + 6 - Ø7 x 80	100 x 80	**2,3**	80 x 155	**7,0**	100 x 140	**4,6**
LOCKT50175 LOCKTEVO50175	50 x 175	8 + 8 - Ø7 x 80	100 x 80	**2,9**	80 x 190	**10,4**	100 x 175	**5,9**
LOCKT75175 LOCKTEVO75175	75 x 175	12 + 12 - Ø7 x 80	120 x 80	**2,9**	80 x 190	**17,2**	120 x 175	**5,9**
LOCKT75215 LOCKTEVO75215	75 x 215	18 + 18 - Ø7 x 80	120 x 80	**3,5**	80 x 230	**25,4**	120 x 215	**7,1**
LOCKT100215 LOCKTEV100215	100 x 215	24 + 24 - Ø7 x 80	140 x 80	**3,5**	80 x 230	**33,9**	140 x 215	**7,1**
LOCKT75240 LOCKTEV75240	75 x 240	21 + 21 - Ø7 x 80	120 x 80	**4,1**	80 x 255	**29,4**	120 x 240	**8,2**
LOCKT100240 LOCKTEV100240	100 x 240	28 + 28 - Ø7 x 80	140 x 80	**4,1**	80 x 255	**39,5**	140 x 240	**8,2**
LOCKT125240 LOCKTEVO125240	125 x 240	35 + 35 - Ø7 x 80	160 x 80	**4,1**	80 x 255	**39,5**	160 x 240	**8,2**
LOCKT75265 LOCKTEV75265	75 x 265	24 + 24 - Ø7 x 80	120 x 80	**4,5**	80 x 280	**34,7**	120 x 265	**9,0**
LOCKT100265 LOCKTEVO100265	100 x 265	32 + 32 - Ø7 x 80	140 x 80	**4,5**	80 x 280	**43,1**	140 x 265	**9,0**
LOCKT125265 LOCKT125265	125 x 265	40 + 40 - Ø7 x 80	160 x 80	**4,5**	80 x 280	**43,1**	160 x 265	**9,0**
LOCKT75290 LOCKTEV75290	75 x 290	27 + 27 - Ø7 x 80	120 x 80	**4,9**	80 x 305	**40,5**	120 x 290	**9,7**
LOCKT100290 LOCKTEV100290	100 x 290	36 + 36 - Ø7 x 80	140 x 80	**4,9**	80 x 305	**46,7**	140 x 290	**9,7**
LOCKT125290 LOCKTEV125290	125 x 290	45 + 45 - Ø7 x 80	160 x 80	**4,9**	80 x 305	**46,7**	160 x 290	**9,7**

NOTES

(1) The screws must be installed in the column with pre-drilled holes.

(2) Strength values can be accepted as valid, for higher safety standards, for fastening on column.

GENERAL PRINCIPLES

For the GENERAL PRINCIPLES of calculation, see page 41.

STRUCTURAL VALUES | TIMBER-TO-TIMBER | F_{ax}

beam

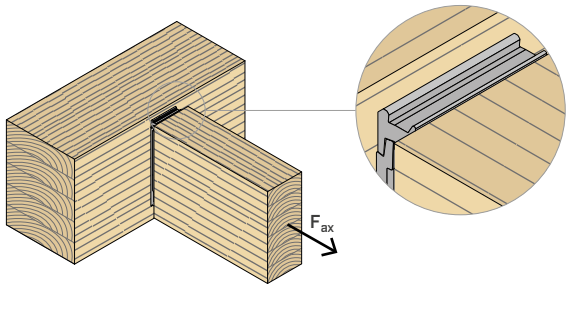

column

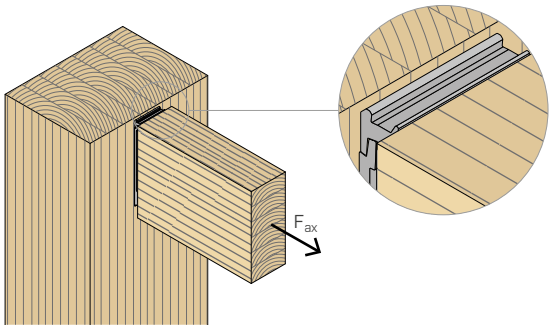

connector	B x H	fasteners screw LBS | LBS EVO n_H + n_j - Ø x L	$R_{ax,k\ timber}$			$R_{ax,k\ alu}$
			GL24h	C50	LVL	
	[mm]	[mm]	[kN]	[kN]	[kN]	[kN]
LOCKT50135 **LOCKTEVO50135**	50 x 135	6 + 6 - Ø7 x 80	**5,9**	**6,4**	**7,5**	**5,4**
LOCKT50175 **LOCKTEVO50175**	50 x 175	8 + 8 - Ø7 x 80	**6,7**	**7,3**	**8,6**	**5,4**
LOCKT75175 **LOCKTEVO75175**	75 x 175	12 + 12 - Ø7 x 80	**10,0**	**11,0**	**12,8**	**8,1**
LOCKT75215 **LOCKTEVO75215**	75 x 215	18 + 18 - Ø7 x 80	**9,9**	**10,8**	**12,6**	**6,9**
LOCKT100215 **LOCKTEV100215**	100 x 215	24 + 24 - Ø7 x 80	**13,2**	**14,4**	**16,8**	**9,2**
LOCKT75240 **LOCKTEV75240**	75 x 240	21 + 21 - Ø7 x 80	**10,0**	**11,0**	**12,8**	**8,4**
LOCKT100240 **LOCKTEV100240**	100 x 240	28 + 28 - Ø7 x 80	**13,4**	**14,6**	**17,1**	**11,2**
LOCKT125240 **LOCKTEVO125240**	125 x 240	35 + 35 - Ø7 x 80	**16,7**	**18,3**	**21,4**	**14,0**
LOCKT75265 **LOCKTEV75265**	75 x 265	24 + 24 - Ø7 x 80	**10,2**	**11,2**	**13,1**	**8,4**
LOCKT100265 **LOCKTEVO100265**	100 x 265	32 + 32 - Ø7 x 80	**13,6**	**14,9**	**17,4**	**11,2**
LOCKT125265 **LOCKT125265**	125 x 265	40 + 40 - Ø7 x 80	**17,0**	**18,6**	**21,8**	**14,0**
LOCKT75290 **LOCKTEV75290**	75 x 290	27 + 27 - Ø7 x 80	**10,4**	**11,4**	**13,3**	**8,4**
LOCKT100290 **LOCKTEV100290**	100 x 290	36 + 36 - Ø7 x 80	**13,9**	**15,2**	**17,7**	**11,2**
LOCKT125290 **LOCKTEV125290**	125 x 290	45 + 45 - Ø7 x 80	**17,4**	**19,0**	**22,2**	**14,0**

GENERAL PRINCIPLES

For the GENERAL PRINCIPLES of calculation, see page 41.

MOUNTING

VIDEO

EXPOSED INSTALLATION WITH LOCK STOP

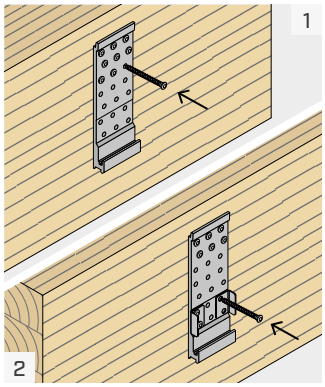

Place the connector on the main element and fasten the upper screws. When using LOCK STOP, position LOCK STOP and fasten the remaining screws.

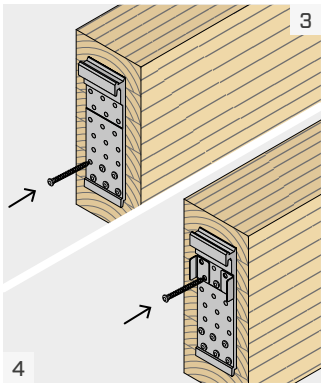

Place the connector on the secondary beam and fasten the lower screws. When using LOCK STOP, position LOCK STOP and fasten the remaining screws.

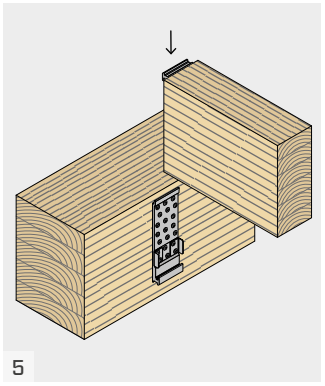

Hang the secondary beam from the main member by lowering it into place. Make sure that the two LOCK connectors are parallel to each other and avoid subjecting them to excessive strain during installation.

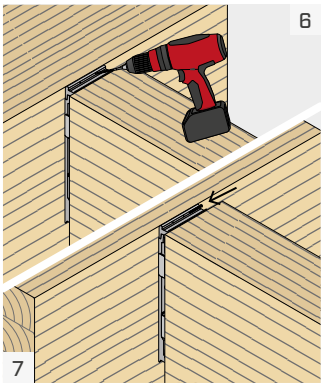

It is possible to install an uplift screw for F_{up} by drilling one hole Ø5 inclined at 45° in the upper part of the connector. A Ø5 screw must be installed in the hole.

CONCEALED INSTALLATION

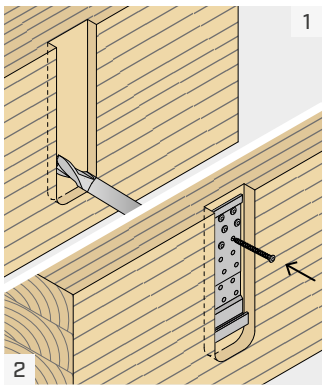

Carry out the routing on the main element. Place the connector on the main element and fasten all screws.

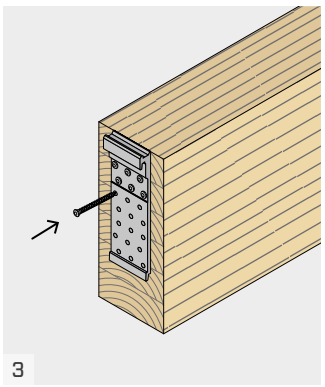

Place the connector on the secondary beam and fasten all screws.

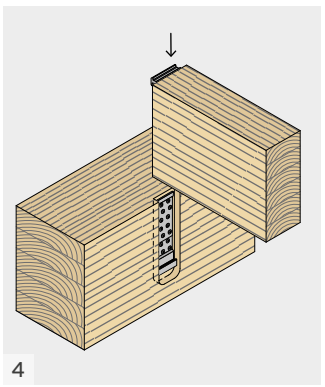

Hang the secondary beam from the main member by lowering it into place. Make sure that the two LOCK connectors are parallel to each other and avoid subjecting them to excessive strain during installation.

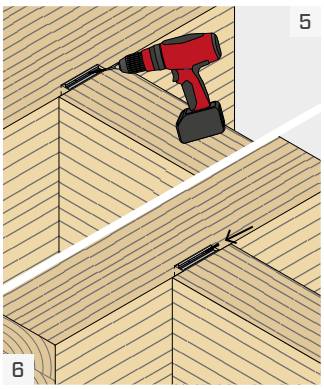

It is possible to install an uplift screw for F_{up} by drilling one hole Ø5 inclined at 45° in the upper part of the connector. A Ø5 screw must be installed in the hole.

SEMI-CONCEALED INSTALLATION - CONNECTOR VISIBLE FROM BELOW

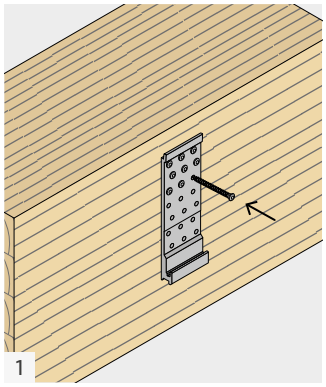

Place the connector on the main element and fasten all screws.

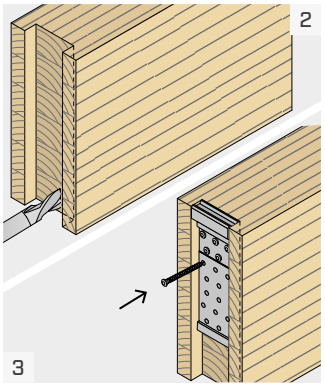

Cut a full depth routing on the secondary beam. Position the connector and fasten all screws.

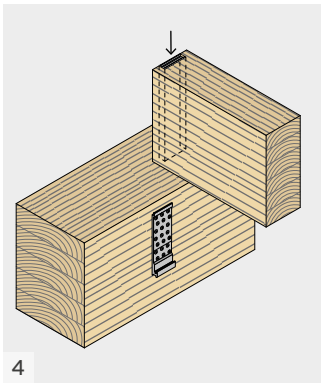

Hang the secondary beam from the main member by lowering it into place.
Make sure that the two LOCK connectors are parallel to each other and avoid subjecting them to excessive strain during installation.

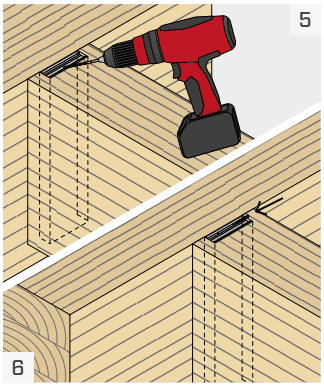

It is possible to install an uplift screw for F_{up} by drilling one hole Ø5 inclined at 45° in the upper part of the connector. A Ø5 screw must be installed in the hole.

COUPLED LOCK T MIDI INSTALLATION

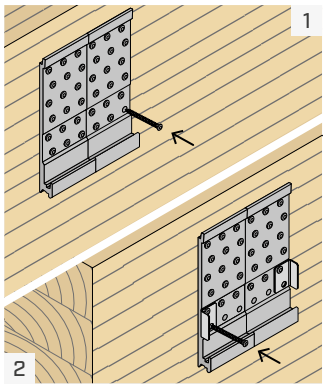

Place the connectors on the main element and fasten the top screws, making sure the connectors are aligned with each other. When using LOCK STOP, position LOCK STOP and fasten the remaining screws.

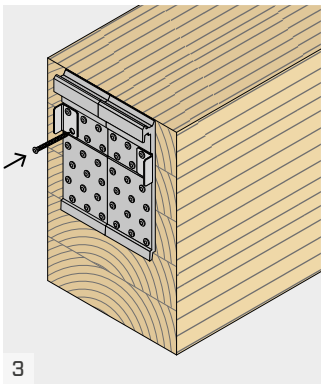

Place the connectors on the secondary beam and fasten the lower screws, making sure the connectors are aligned with each other. When using LOCK STOP, position LOCK STOP and fasten the remaining screws.

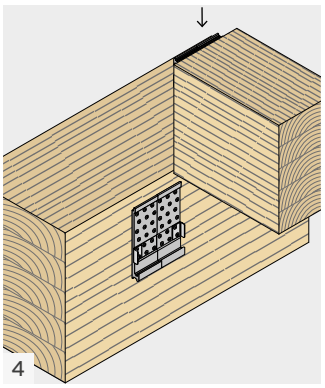

Hang the secondary beam from the main member by lowering it into place. Make sure that the LOCK connectors are parallel to each other and avoid subjecting them to excessive strain during installation.

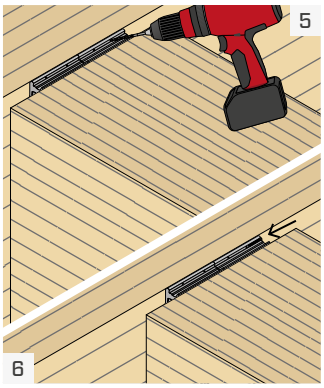

It is possible to install an uplift screw for F_{up} by drilling one hole Ø5 inclined at 45° in the upper part of the connector. A Ø5 screw must be installed in the hole.

GENERAL PRINCIPLES

- Dimensioning and verification of the timber elements must be carried out separately. In particular, for loads perpendicular to the beam axis, it is recommended to perform a splitting check in both wooden elements.
- If coupled connectors are used, special care must be taken in alignment during installation to avoid different stresses in the two connectors.
- The connector must always be fully fastened using all the holes.
- Fastening with partial nailing. Screws with the same length must be used for each connector half.
- Screws must always be inserted with pre-drilling holes in the column.
- Screws must be inserted with pre-drilling hole on main or secondary beam with density $\rho_k > 420$ kg/m^3.
- Structural values are calculated assuming a constant thickness of the metal element, including the thickness of the LOCK STOP.
- The coefficients k_{mod} and γ_M should be taken according to the current regulations used for the calculation.
- The following verification shall be satisfied for combined loading:

$$\left(\frac{F_{ax,d}}{R_{ax,d}}\right)^2 + \left(\frac{F_{v,d}}{R_{v,d}}\right)^2 + \left(\frac{F_{up,d}}{R_{up,d}}\right)^2 + \left(\frac{F_{lat,d}}{R_{lat,d}}\right)^2 \leq 1$$

$F_{v,d}$ and $F_{up,d}$ are forces acting in opposite directions. Therefore only one of the forces $F_{v,d}$ and $F_{up,d}$ can act in combination with the forces $F_{ax,d}$ or $F_{lat,d}$.

STRUCTURAL VALUES | F_{lat}

- Characteristic values calculated according to EN 1995:2014 and ETA-19/0831 for screws without pre-drilling hole and GL24h timber elements with density of ρ_k = 385 kg/m^3 .
- Special care must be taken in the execution of cutting the routing in the main element or secondary beam to limit the lateral sliding of the connection.
- The configurations for F_{lat} strength (column routing, primary beam routing, secondary beam routing, LOCK STOP and inclined screw) have different stiffness levels. Therefore, combining two or more configurations in order to increase the strength is not allowed.
- Design values can be obtained from characteristic values as follows:

  housing in the column, primary beam or secondary beam and inclined screw

$$R_{lat,d} = \frac{R_{lat,k\ timber} \cdot k_{mod}}{\gamma_M}$$

  LOCK STOP

$$R_{lat,d} = \frac{R_{lat,k\ steel}}{\gamma_{M2}}$$

  where:

  - γ_{M2} Is the partial safety coefficient of steel material according to EN 1993.
- The strength F_{lat} with inclined screw and fastening on main beam was calculated considering the effective number for shear-stressed screws according to ETA-11/0030 and EN 1995:2014.

STRUCTURAL VALUES | F_v | F_{up} | F_{ax}

- GL24h: Characteristic values calculated according to EN 1995:2014 and ETA-19/0831 for screws without pre-drilling hole on secondary beam and screws with pre-drilling hole on column. ρ_k = 385 kg/m^3 has been taken in consideration in the calculation.
- C50 and LVL: characteristic values calculated according to EN 1995:2014 and ETA-19/0831 for screws with pre-drilling hole. ρ_k = 430 kg/m^3 per C50 and ρ_k = 480 kg/m^3 for LVL have been considered for calculations.
- Design values can be obtained from characteristic values as follows:

$$R_{v,d} = min \begin{cases} \frac{R_{v,k\ timber} \cdot k_{mod}}{\gamma_M} \\ \frac{R_{v,k\ alu}}{\gamma_{M2}} \end{cases}$$

$$R_{up,d} = \frac{R_{up,k\ timber} \cdot k_{mod}}{\gamma_M}$$

$$R_{ax,d} = min \begin{cases} \frac{R_{ax,k\ timber} \cdot k_{mod}}{\gamma_M} \\ \frac{R_{ax,k\ alu}}{\gamma_{M2}} \end{cases}$$

  where:

  - γ_{M2} is the partial safety coefficient of the aluminium material subject to tensile stress, to be taken according to the national standards used for calculation. If there are no other provisions, it is suggested to use the value provided by EN 1999-1-1, equal to γ_{M2} = 1.25.
- For configurations for which only the timber-side strength is reported, the aluminium-side overstrength can be assumed.
- The F_{up} strength was calculated considering the effective number for axially loaded screws according to ETA-11/0030.

CONNECTION STIFFNESS | F_v

- Connection stiffness can be calculated according to ETA-19/0831, with the following equation:

$$K_{v,ser} = \frac{n \cdot \rho_m^{1,5} \cdot d^{0,8}}{30} \quad N/mm$$

  where:

  - d is the nominal diameter of the screw in the secondary beam, in mm;
  - ρ_m is the average density of the secondary beam, in kg/m^3;
  - n is the number of screws in the secondary beam.

INTELLECTUAL PROPERTY

- Some models of LOCK T MIDI are protected by the following Registered Community Designs: RCD 008254353-0007 | RCD 008254353-0008 | RCD 008254353-0009 | RCD 008254353-00010 | RCD 015032190-0010.

LOCK C CONCRETE

CONCEALED HOOK TIMBER-TO-CONCRETE CONNECTOR

SIMPLE
Quick installation on concrete. Easy to hook system with screw-in anchors on the concrete side and self-drilling screws on the wood side.

REMOVABLE
Thanks to the hooking system, the wooden beams can be easily removed for seasonal requirements.

OUTDOOR
They can be used outdoors in SC3 in the absence of aggressive conditions. The correct choice of screw enables all fastening requirements to be met.

USA, Canada and more design values available online.

VIDEO

CALCULATION TOOL

ETA-19/0831

SERVICE CLASS SC1 SC2 SC3

For information on the application areas of with reference to environment service class, atmospheric corrosivity class and timber corrosion class, refer to the website www.rothoblaas.com.

MATERIAL

alu 6005A EN AW-6005A aluminium alloy

EXTERNAL LOADS

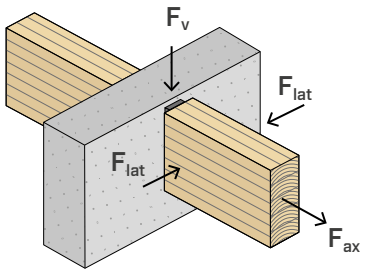

VIDEO
Scan the QR Code and watch the video on our YouTube channel





FIELDS OF USE

Concealed beam joint in timber-to-concrete or timber-to-steel configuration, suitable for gazebos, floors or roofs. Use also outdoors in non aggressive environments.

Can be applied to:
- solid timber softwood and hardwood
- glulam, LVL



HYBRID STRUCTURES

Specially designed for fastening timber beams to concrete or steel supports.
Ideal for hybrid structures.

TIMBER-TO-CONCRETE

Ideal for the construction of roofs or pergolas near concrete supports. Concealed fastening and easy to install.

CODES AND DIMENSIONS

1

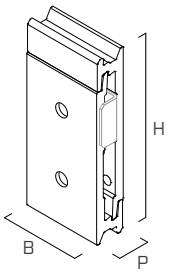

2

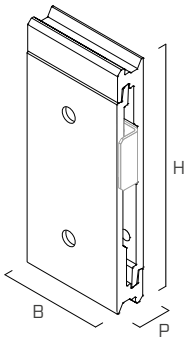

3

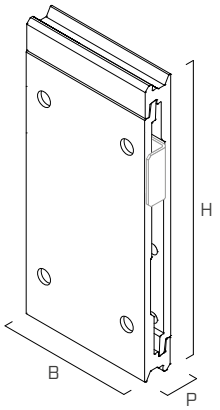

4

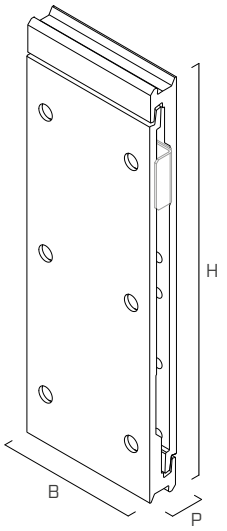

	CODE	B [mm]	H [mm]	P [mm]	*B [in]*	*H [in]*	*P [in]*	n_{screw} x Ø(1) [pcs]	$n_{anchors}$ x Ø(1) [pcs]	$n_{LOCKSTOP}$ x type(2)			pcs.(3)
1	**LOCKC53120**	52,5	120	20	*2 1/16*	*4 3/4*	*0.79*	12 - Ø5 | *0.20*	2 - Ø8 | *0.32*	2 x LOCKSTOP5	●	●	25
2	**LOCKC75175**	75	175	22	*2 15/16*	*6 7/8*	*0.87*	12 - Ø7 | *0.28*	2 - Ø10 | *0.40*	2 x LOCKSTOP7 1 x LOCKSTOP75	●	●	12
3	**LOCKC100215**	100	215	22	*4*	*8 7/16*	*0.87*	24 - Ø7 | *0.28*	4 - Ø10 | *0.40*	2 x LOCKSTOP7 1 x LOCKSTOP100	●	●	8
4	**LOCKC100290**	100	290	22	*4*	*11 7/16*	*0.87*	36 - Ø7 | *0.28*	6 - Ø10 | *0.40*	2 x LOCKSTOP7 1 x LOCKSTOP100	●	●	10

Screws, anchors and LOCK STOP not included in the package.
(1) Number of screws and anchors for connector pairs.
(2) The LOCK STOP installation options are indicated on page 45.
(3) Number of connector pairs.

LOCK STOP | LOCKING DEVICE FOR Flat

1

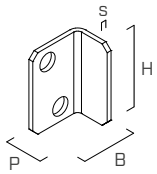

2

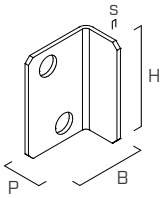

3

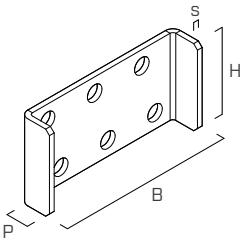

4

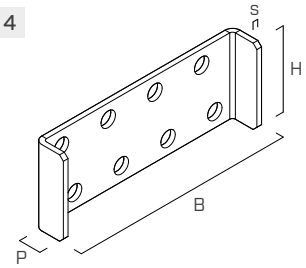

	CODE	description	B [mm]	H [mm]	P [mm]	s [mm]	*B [in]*	*H [in]*	*P [in]*	*s [in]*	pcs
1	**LOCKSTOP5(*)**	carbon steel DX51D+Z275	19	27,5	13	1,5	*3/4*	*1 1/16*	*1/2*	*0.06*	100
2	**LOCKSTOP7(*)**	carbon steel DX51D+Z275	26,5	38	15	1,5	*1 1/16*	*1 1/2*	*9/16*	*0.06*	50
3	**LOCKSTOP75**	stainless steel A2 | AISI 304	81	40	15,5	2,5	*3 3/16*	*1 9/16*	*5/8*	*0.10*	20
4	**LOCKSTOP100**	stainless steel A2 | AISI 304	106	40	15,5	2,5	*4 3/16*	*1 9/16*	*5/8*	*0.10*	20

(*) Not holding CE marking

FASTENERS

type	description		d [mm]	support	page
LBS	round head screw		5-7		571
LBS EVO	C4 EVO round head screw		5-7		571
LBS HARDWOOD	round head screw on hardwoods		5		572
LBS HARDWOOD EVO	C4 EVO round head screw on hardwoods		5-7		572
HBS PLATE EVO	C4 EVO pan head screw		5-6		573
KKF AISI410	pan head screw		5-6		574
SKS	screw-in anchor		8-10		528

INSTALLATION

wall

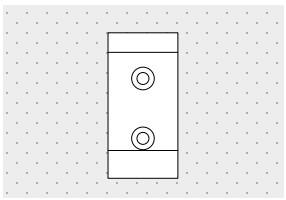

beam

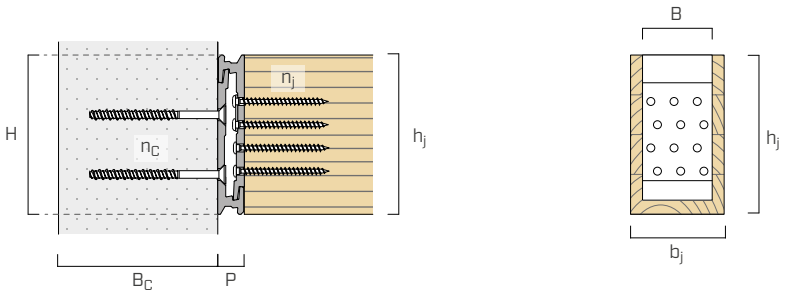

connector	B x H	CONCRETE SKS anchors n_c - Ø x L	CONCRETE B_C	TIMBER LBS screws n_j - Ø x L	TIMBER b_j x h_j with pre-drilling hole	TIMBER b_j x h_j without pre-drilled hole
	[mm]	[mm]	[mm]	[mm]	[mm]	[mm]
LOCKC53120	52,5 x 120	2 - Ø8 x 100	120	12 - Ø5 x 50 12 - Ø5 x 70	70 x 120	78 x 120
LOCKC75175	75 x 175	2 - Ø10 x 100	120	12 - Ø7 x 80	99 x 175	105 x 175
LOCKC100215	100 x 215	4 - Ø10 x 100	120	24 - Ø7 x 80	124 x 215	130 x 215
LOCKC100290	100 x 290	6 - Ø10 x 100	120	36 - Ø7 x 80	124 x 290	130 x 290

INSTALLATION | LOCK STOP ON LOCK C

LOCKC53120 + 2 x LOCKSTOP5

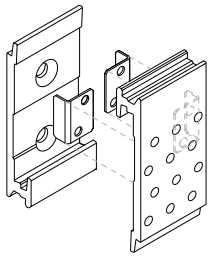

LOCKC75175 + 2 x LOCKSTOP7

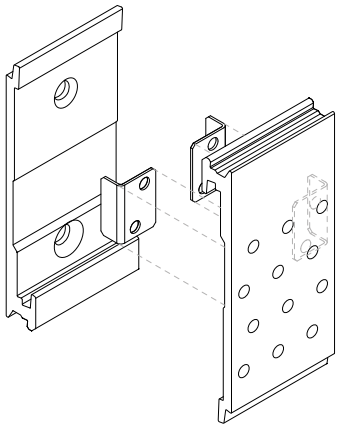

LOCKC100215 + 1 x LOCKSTOP100

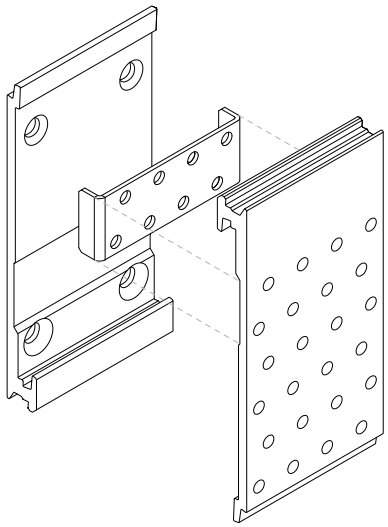

LOCK STOP| assembly

connector	B x H	assembly configurations LOCKSTOP5	LOCKSTOP7	LOCKSTOP75	LOCKSTOP100
	[mm]	[pcs]	[pcs]	[pcs]	[pcs]
LOCKC53120	52,5 x 120	x 2	-	-	-
LOCKC75175	75 x 175	-	x 2	x 1	-
LOCKC100215	100 x 215	-	x 2	-	x 1
LOCKC100290	100 x 290	-	x 2	-	x 1

STRUCTURAL VALUES | TIMBER-TO-CONCRETE | F_v

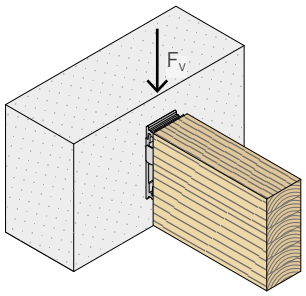

connector	B x H [mm]	fasteners LBS screws n_j - Ø x L [mm]	$R_{v,k\ timber}$ C24 [kN]	GL24h [kN]	LVL [kN]	$R_{v,k\ alu}$ [kN]	fasteners SKS anchors n_c - Ø x L [mm]	$R_{v,d\ concrete}$ [kN]
LOCKC53120	52,5 x 120	12 - Ø5x50 12 - Ø5x70	**13,8** **17,1**	**15,0** **17,9**	**15,4** **17,8**	**30**	2 - Ø8x100	**9,2**
LOCKC75175	75 x 175	12 - Ø7x80	**30,2**	**32,2**	**31,4**	**60**	2 - Ø10x100	**19,6**
LOCKC100215	100 x 215	24 - Ø7x80	**60,5**	**64,5**	**62,8**	**80**	4 - Ø10x100	**33,3**
LOCKC100290	100 x 290	36 - Ø7x80	**90,7**	**96,7**	**94,2**	**96**	6 - Ø10x100	**42,8**

STRUCTURAL VALUES | TIMBER-TO-CONCRETE | F_{lat}

secondary beam routing

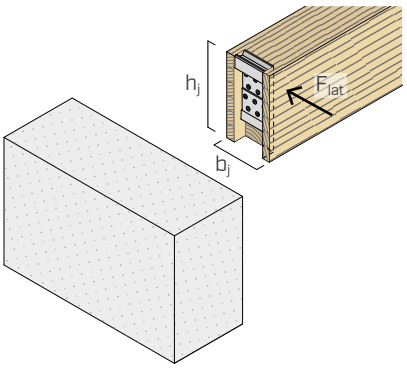

LOCK STOP

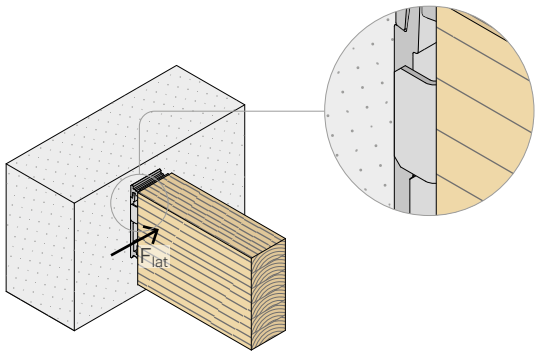

connector	B x H [mm]	fasteners LBS screws n_j - Ø x L [mm]	secondary beam routing $R_{lat,k\ timber}$ b_j x h_j [mm]	C24 [kN]	LOCK STOP $R_{lat,k\ steel}$ $n_{LOCKSTOP}$ x type [mm]	[kN]	fasteners SKS anchors n_c - Ø x L [mm]	$R_{lat,d\ concrete}$ [kN]
LOCKC53120	52,5 x 120	12 - Ø5x50	100 x 120	**3,7**	2 x LOCKSTOP5	**0,5**	2 - Ø8x100	**8,6**
LOCKC75175	75 x 175	12 - Ø7x80	120 x 175	**5,9**	2 x LOCKSTOP7 1 x LOCKSTOP75	**0,3** **0,8**	2 - Ø10x100	**18,7**
LOCKC100215	100 x 215	24 - Ø7x80	140 x 215	**7,1**	2 x LOCKSTOP7 1 x LOCKSTOP100	**0,3** **0,8**	4 - Ø10x100	**35,0**
LOCKC100290	100 x 290	36 - Ø7x80	140 x 290	**9,7**	2 x LOCKSTOP7 1 x LOCKSTOP100	**0,3** **0,8**	6 - Ø10x100	**33,1**

GENERAL PRINCIPLES

For the GENERAL PRINCIPLES of calculation, see page 49.

STRUCTURAL VALUES | TIMBER-TO-CONCRETE | F_{ax}

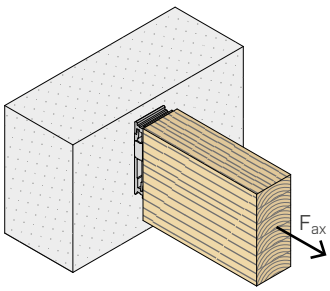

connector		fasteners LBS screws	$R_{ax,k\ timber}$		$R_{ax,k\ alu}$	fasteners SKS anchors	$R_{ax,d\ concrete}$
	B x H	n_j - Ø x L	C24	GL24h		n_c - Ø x L	
	[mm]	[mm]	[kN]	[kN]	[kN]	[mm]	[kN]
LOCKC53120	52,5 x 120	12 - Ø5x50	**4,4**	**4,8**	**6,9**	2 - Ø8x100	**10,8**
LOCKC75175	75 x 175	12 - Ø7x80	**9,3**	**10,0**	**9,8**	2 - Ø10x100	**17,7**
LOCKC100215	100 x 215	24 - Ø7x80	**12,2**	**13,2**	**12,0**	4 - Ø10x100	**26,1**
LOCKC100290	100 x 290	36 - Ø7x80	**12,9**	**13,9**	**12,6**	6 - Ø10x100	**31,5**

GENERAL PRINCIPLES

For the GENERAL PRINCIPLES of calculation, see page 49.

DESIGN OF ALTERNATE FASTENERS AND ANCHORS

For fastening with anchors other than those indicated in the table, the calculation on concrete may be performed with reference to the ETA of the chosen anchor and the diagrams below.

In the same way, the calculation of fasteners on steel can be carried out in accordance with national design standards for steel structures, following the diagrams below.

The LOCK connector and the group of anchors must be verified as follows:

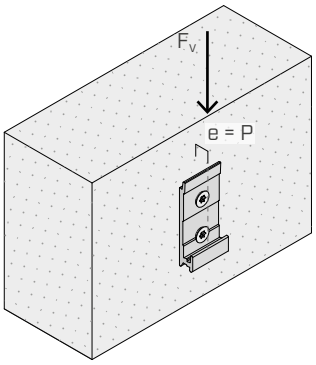

$V_d = F_{v,d}$

$M_d = e \cdot F_{v,d}$

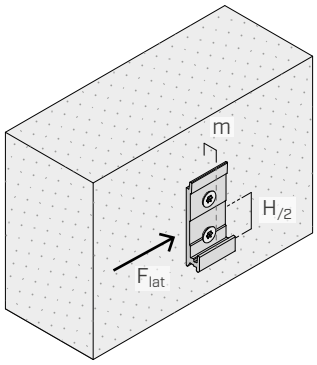

$V_{lat,d} = F_{lat,d}$

$M_{lat,d} = m \cdot F_{lat,d}$

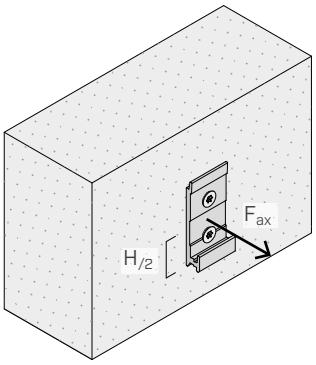

$V_{ax,d} = F_{ax,d}$

where:

- *e = 20 mm* — *for LOCKC53120*
- *e = 22 mm* — *for LOCKC75175, LOCKC100215 and LOCKC100290*
- *m = 6 mm* — *for LOCKC53120, LOCKC75175, LOCKC100215 and LOCKC100290*
- *H* — *LOCK C connector height*

INSTALLATION METHODS

CORRECT INSTALLATION

Install the beam by lowering it from the top, without tilting it. Ensure proper seating and coupling of the connector at both the top and bottom, as shown in the figure.

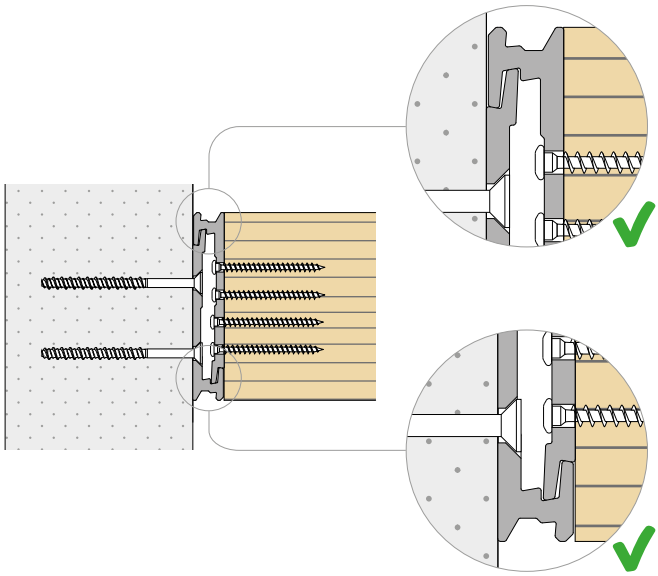

INCORRECT INSTALLATION

Partial and incorrect coupling of the connector. Ensure that both flanges of the connector are properly seated in their respective seats.

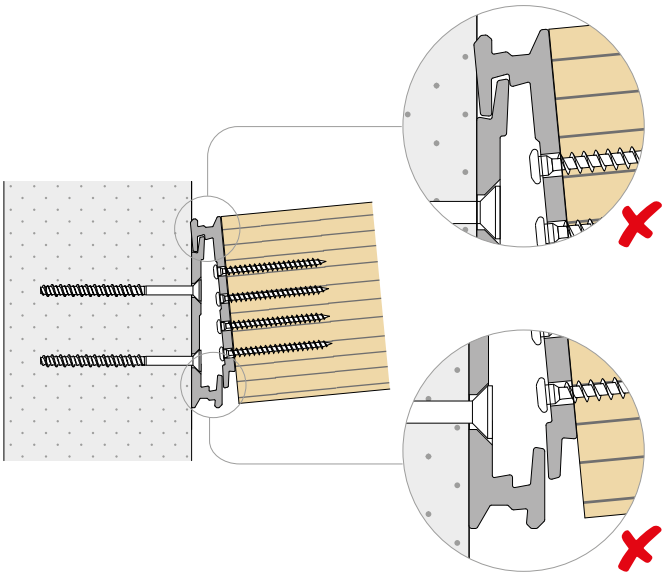

MOUNTING

VIDEO

EXPOSED INSTALLATION WITH LOCK STOP

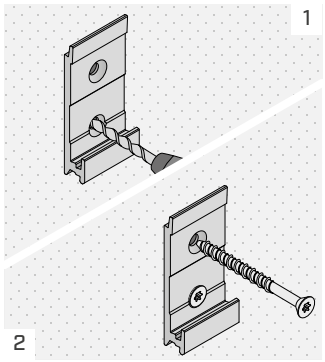

Place the connector on concrete and fasten the anchors according to the installation instructions.

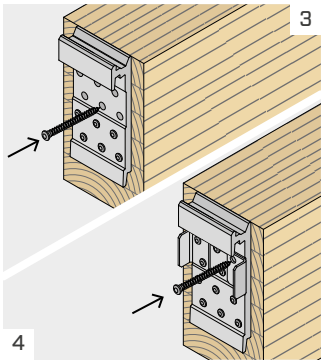

Place the connector on the secondary beam and fasten the lower screws.
When using LOCK STOP, position LOCK STOP and fasten the remaining screws.

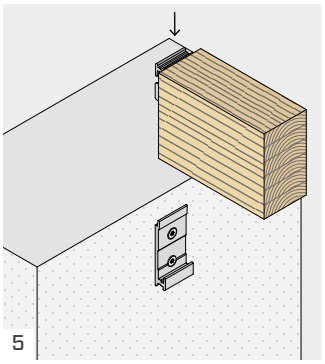

Hang the secondary beam from the main member by lowering it into place.

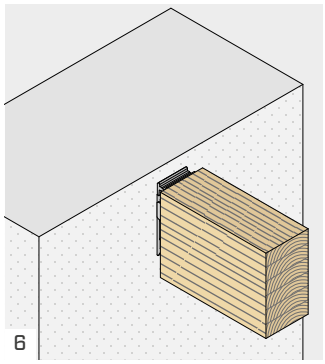

Make sure that the two LOCK connectors are parallel to each other and avoid subjecting them to excessive strain during installation.

SEMI-CONCEALED INSTALLATION - CONNECTOR VISIBLE FROM BELOW

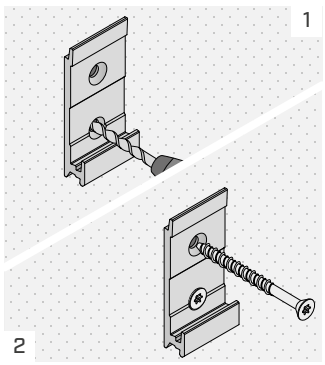

Place the connector on concrete and fasten the anchors according to the installation instructions.

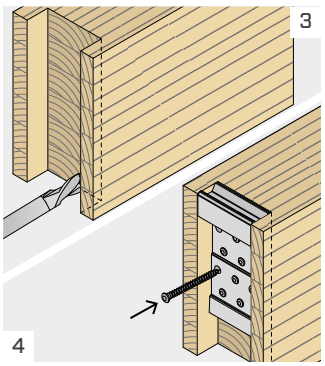

Perform full routing on the secondary beam. Position the connector and fasten all screws.

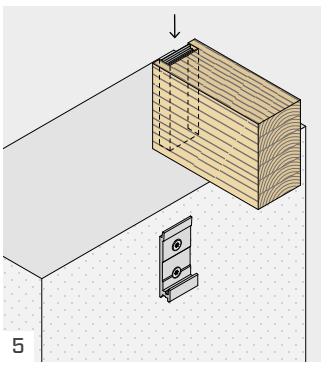

Hang the secondary beam from the main member by lowering it into place.

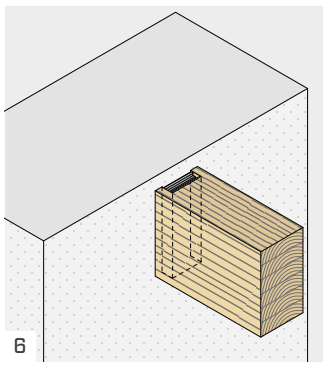

Make sure that the two LOCK connectors are parallel to each other and avoid subjecting them to excessive strain during installation.

GENERAL PRINCIPLES

- Dimensioning and verification of concrete and timber elements must be carried out separately. In particular, it is recommended to perform a splitting check for loads perpendicular to the grain of timber elements.
- The connector must always be fully fastened using all the holes.
- Fastening with partial nailing. Screws with the same length must be used for each connector half.
- Pre-drilling holes are not required for screws on secondary beam, with density $\rho_k \leq 420$ kg/m^3. The pre-drilling is mandatory on secondary beam with density $\rho_k > 420$ kg/m^3.
- In the calculation phase, a strength class of C25/30 concrete with thin reinforcement was considered, in the absence of spacing and distances from the edge and minimum thickness indicated in the installation tables. The strength values are valid for the calculation hypothesis defined in the table; for boundary conditions different from those in the table (e.g. minimum distances from the edge or different concrete thickness), the concrete strength must be calculated separately (see the DESIGN OF ALTERNATE FASTENERS AND ANCHORS section).
- The coefficients k_{mod} and γ_M should be taken according to the current regulations used for the calculation.
- The following verification shall be satisfied for combined loading:

$$\left(\frac{F_{ax,d}}{R_{ax,d}}\right)^2 + \left(\frac{F_{v,d}}{R_{v,d}}\right)^2 + \left(\frac{F_{lat,d}}{R_{lat,d}}\right)^2 \leq 1$$

STRUCTURAL VALUES | F_{lat}

- Characteristic values calculated according to EN 1995:2014 and ETA-19/0831 for screws without pre-drilling hole and C24 timber elements with density of $\rho_k = 350$ kg/m^3.
- Design values of concrete anchors are in accordance with ETA-24/0024.
- Design values can be obtained from characteristic values as follows:

Routing in the secondary beam

$$R_{lat,d} = min \begin{cases} \frac{R_{lat,k\ timber} \cdot k_{mod}}{\gamma_M} \\ R_{lat,d\ concrete} \end{cases}$$

LOCK STOP

$$R_{lat,d} = min \begin{cases} \frac{R_{lat,k\ steel}}{\gamma_{M2}} \\ R_{lat,d\ concrete} \end{cases}$$

where:

- γ_{M2} is the partial safety coefficient of steel material according to EN 1993-1-1.

STRUCTURAL VALUES | F_v | F_{ax}

- C24 and GL24h: values calculated according to EN 1995:2014 and ETA-19/0831 for screws without pre-drilling hole. $\rho_k = 350$ kg/m^3 for C24 and $\rho_k = 385$ kg/m^3 for GL24h have been considered for calculations.
- LVL: characteristic values calculated according to EN 1995:2014 and ETA-19/0831 for screws with pre-drilling hole. $\rho_k = 480$ kg/m^3 has been taken in consideration in the calculation.
- Design values of concrete anchors are in accordance with ETA-24/0024.
- Design values can be obtained from characteristic values as follows:

$$R_{v,d} = min \begin{cases} R_{v,d\ timber} = \frac{R_{v,k\ timber} \cdot k_{mod}}{\gamma_M} \\ R_{v,d\ alu} = \frac{R_{v,k\ alu}}{\gamma_{M2}} \\ R_{v,d\ concrete} \end{cases}$$

$$R_{ax,d} = min \begin{cases} R_{ax,d\ timber} = \frac{R_{ax,k\ timber} \cdot k_{mod}}{\gamma_M} \\ R_{ax,d\ alu} = \frac{R_{ax,k\ alu}}{\gamma_{M2}} \\ R_{ax,d\ concrete} \end{cases}$$

where:

- γ_{M2} is the partial safety coefficient of the aluminium material subject to tensile stress, to be taken according to the national standards used for calculation. If there are no other provisions, it is suggested to use the value provided by EN 1999-1-1, equal to $\gamma_{M2} = 1.25$.

CONNECTION STIFFNESS | F_v

- Connection stiffness can be calculated according to ETA-19/0831, with the following equation:

$$K_{v,ser} = \frac{n \cdot \rho_m^{1.5} \cdot d^{0.8}}{30} \quad N/mm$$

where:

- d is the nominal diameter of the screw in the secondary beam, in mm;
- ρ_m is the average density of the secondary beam, in kg/m^3;
- n is the number of screws in the secondary beam.

MY PROJECT
calculation software

Discover how to design simply, quickly and intuitively!

MyProject is the practical and reliable software created for professionals who design timber structures: it allows for the design of a broad range or connections, carry out thermo-hygrometric analysis of opaque components and designing the most appropriate acoustic solution. The program provides detailed instructions and explanatory illustrations for the products installation.

Simplify your work, **generate complete calculation reports** thanks to MyProject.

Download it now and start designing!

rothoblaas.com



LOCK FLOOR

JOINT PROFILE FOR PANELS

VIDEO

DESIGN REGISTERED

CE ETA-19/0831

MULTI-STOREY WALLS

Ideal for connecting floor panels to multi-story walls (concrete or timber). The hooking system enables installation without the use of shoring or temporary support structures.

FAST INSTALLATION

The profiles can be pre-installed on panels and walls, without additional fastening on site during installation.

HYBRID STRUCTURES

The LOCKCFLOOR135 model is ideal for fastening timber floors to steel or timber structures.

USA, Canada and more design values available online.

SERVICE CLASS

SC1 SC2 SC3

For information on the application areas of with reference to environment service class, atmospheric corrosivity class and timber corrosion class, refer to the website www.rothoblaas.com.

MATERIAL

alu 6005A EN AW-6005A aluminium alloy

EXTERNAL LOADS

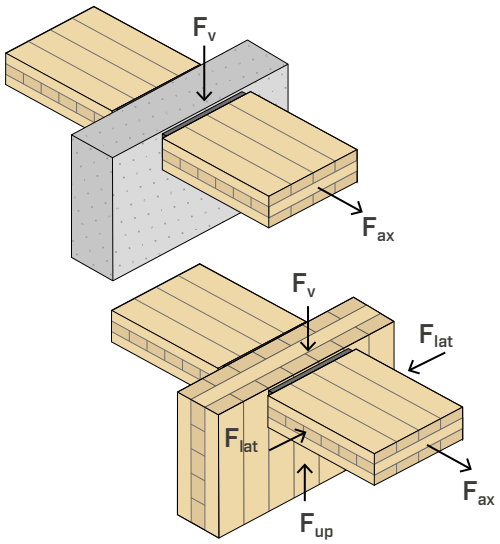





FIELDS OF USE

Concealed panel joint in timber-to-timber, timber-to-concrete or timber-to-steel configuration, suitable for panel floors, façades or stairs.

Can be applied to:

- CLT
- LVL
- MPP



PREFABRICATION

The timber-to-timber version is specifically designed for attaching floors to multi-story CLT walls. The hooking system is particularly suitable for prefabricated floors.

STAIRS AND OTHER

The geometry of the connector is also suitable for non-standard applications, as the installation of timber staircases, prefabricated façades and more.

CODES AND DIMENSIONS

LOCK T FLOOR-LOCK C FLOOR

1

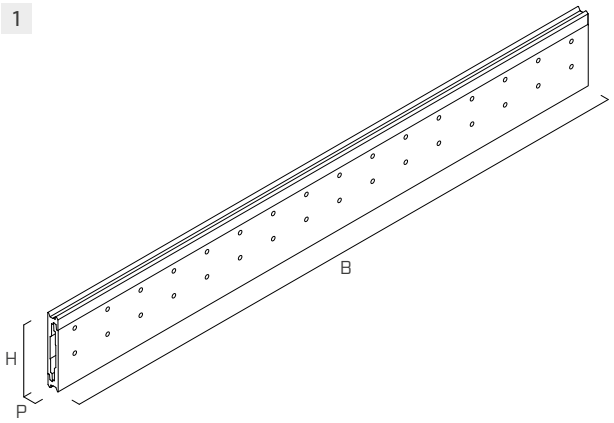

2

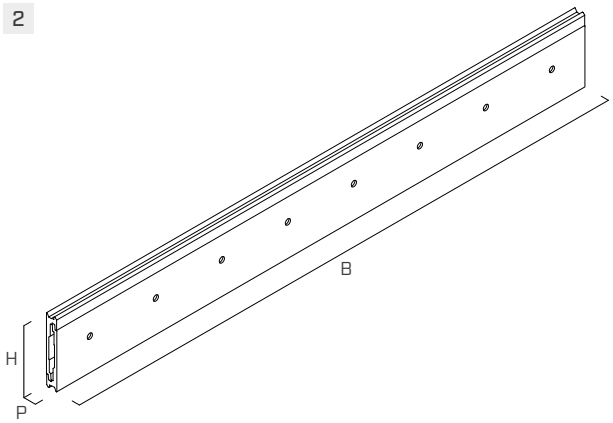

	CODE	B [mm]	H [mm]	P [mm]	*B [in]*	*H [in]*	*P [in]*	n_{screw} x Ø(1) [pcs]	$n_{anchors}$ x Ø(1) [pcs]				pcs(2)
1	**LOCKTFLOOR135**	1200	135	22	*47 1/4*	*5 5/16*	*0.87*	64 - Ø7 | *0.28*	-	●	-	-	1
2	**LOCKCFLOOR135**	1200	135	22	*47 1/4*	*5 5/16*	*0.87*	32 - Ø7 | *0.28*	8 - Ø10 | *0.40*	●	●	●	1

Screws and anchors not included in the package.
(1) Number of screws and anchors for connector pairs.
(2) Number of connector pairs.

FASTENERS

type	description		d [mm]	support	page
LBS	round head screw		7		571
LBS EVO	C4 EVO round head screw		7		571
LBS HARDWOOD EVO	C4 EVO round head screw on hardwoods		7		572
SKS	screw-in anchor		10		528

INSTALLATION METHODS

CORRECT INSTALLATION

Install the panel by lowering it from the top, without tilting. Ensure proper seating and coupling of the connector at both the top and bottom, as shown in the figure.

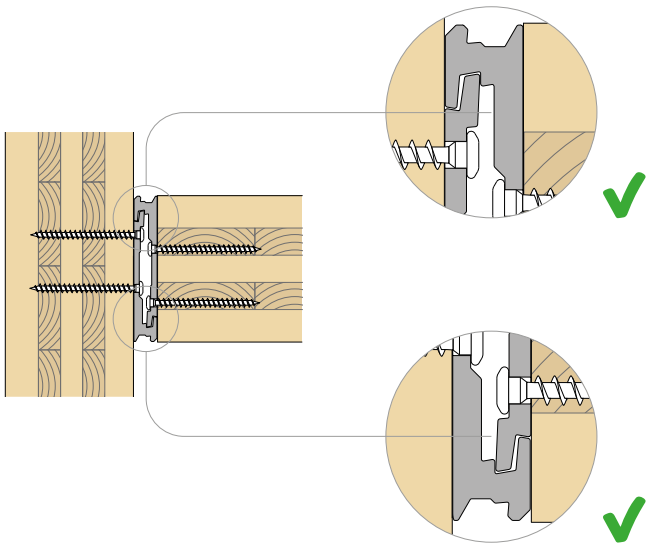

INCORRECT INSTALLATION

Partial and incorrect coupling of the connector. Ensure that both flanges of the connector are properly seated in their respective seats.

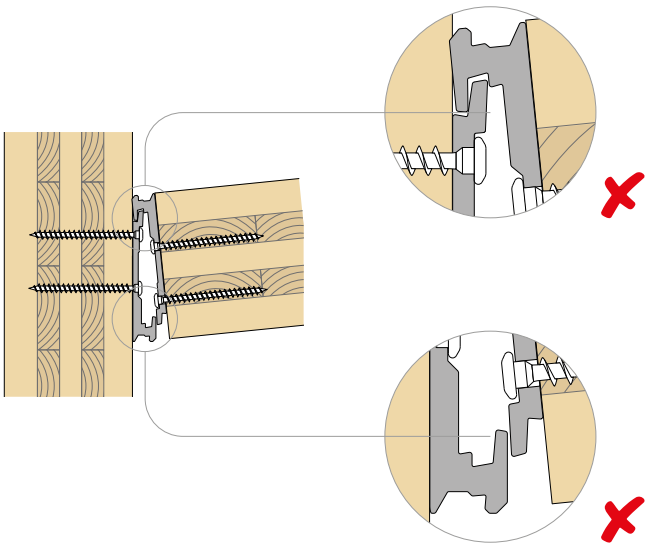

INSTALLATION | LOCK T FLOOR

CONCEALED INSTALLATION

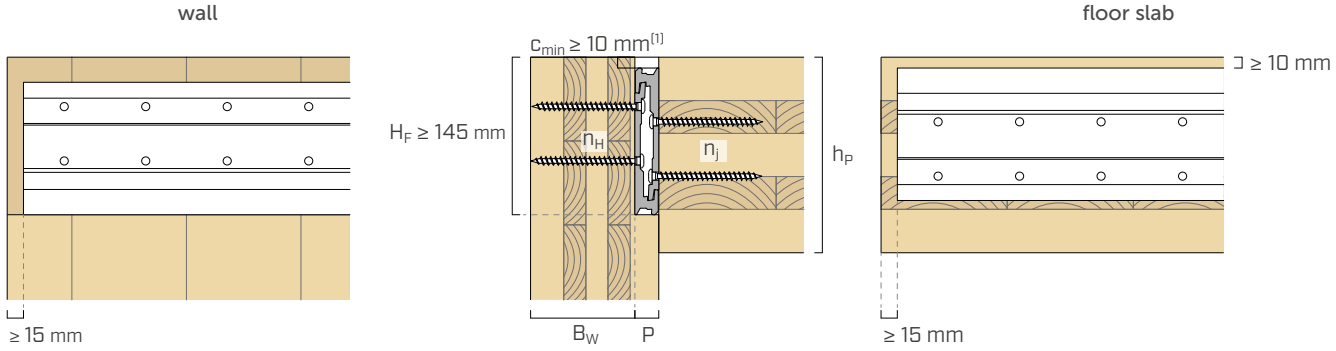

VISIBLE INSTALLATION

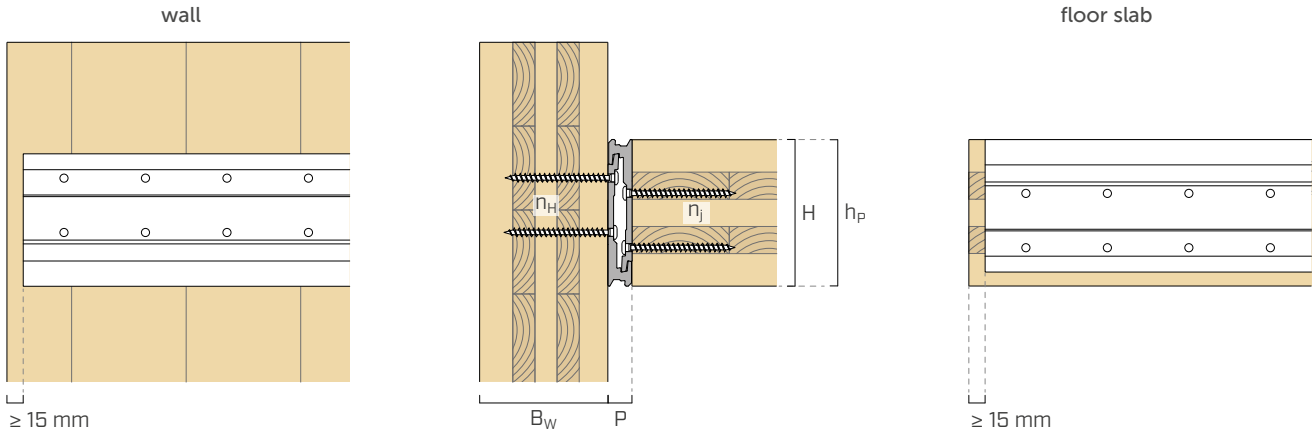

connector	B x H [mm]	no. of modules[2]	fasteners LBS screws $n_H + n_j$ - Ø x L [mm]	CLT wall B_w [mm]	CLT floor h_p [mm]
LOCKTFLOOR135	300 x 135	1	8 + 8 - Ø7 x 80	80	135[1]
	600 x 135	2	16 + 16 - Ø7 x 80		
	900 x 135	3	24 + 24 - Ø7 x 80		
	1200 x 135	4	32 + 32 - Ø7 x 80		

[1] Alignment between the top of floor and top of wall can be achieved by lowering the connector $c_{min} \geq 10$ mm from the top of the CLT floor. This ensures the minimum distance requirements for screws in the wall are met, with respect to the upper end of the wall. In this case, the minimum thickness of the h_p floor is 145 mm.
[2] The 1200 mm long connector can be cut into 300 mm standard length modules.

OPTIONAL INCLINED SCREW

45° inclined holes must be drilled on site using a 5 mm diameter and metal drill bit. The image shows the location of optional inclined holes for a 300 mm wide module.

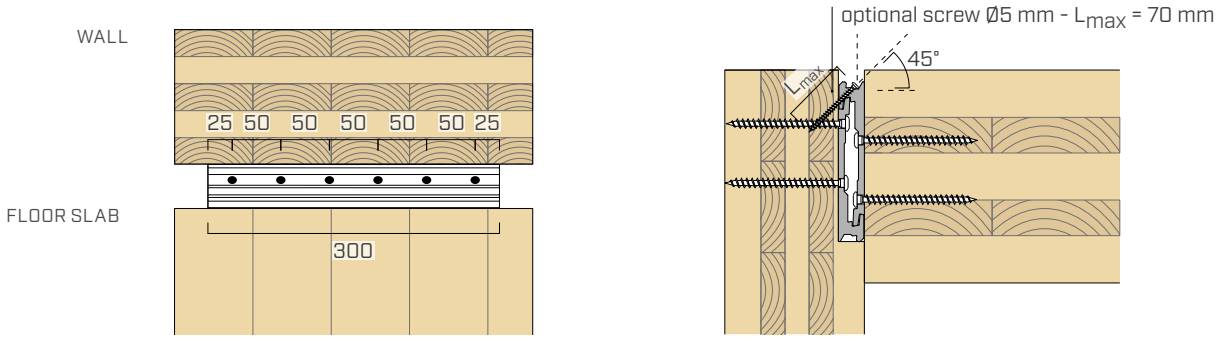

FASTENING PATTERNS

CONTINUOUS INSTALLATION

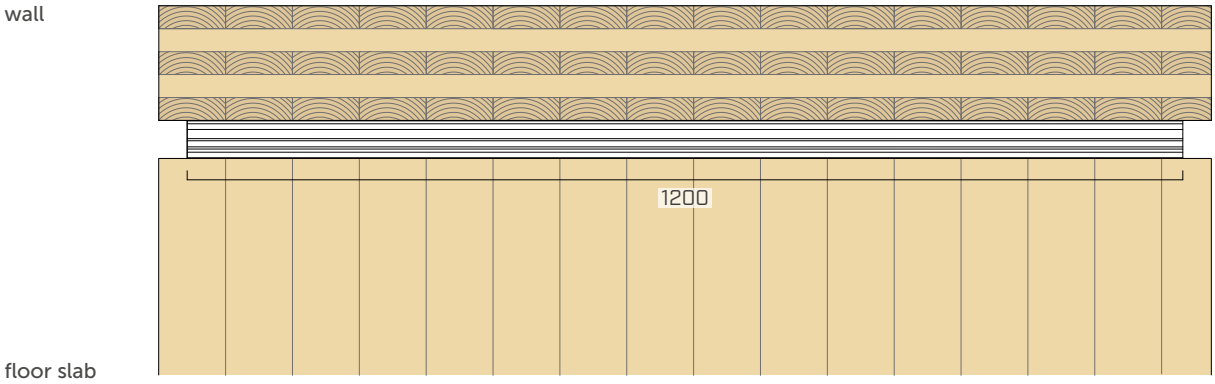

DISCONTINUOUS INSTALLATION

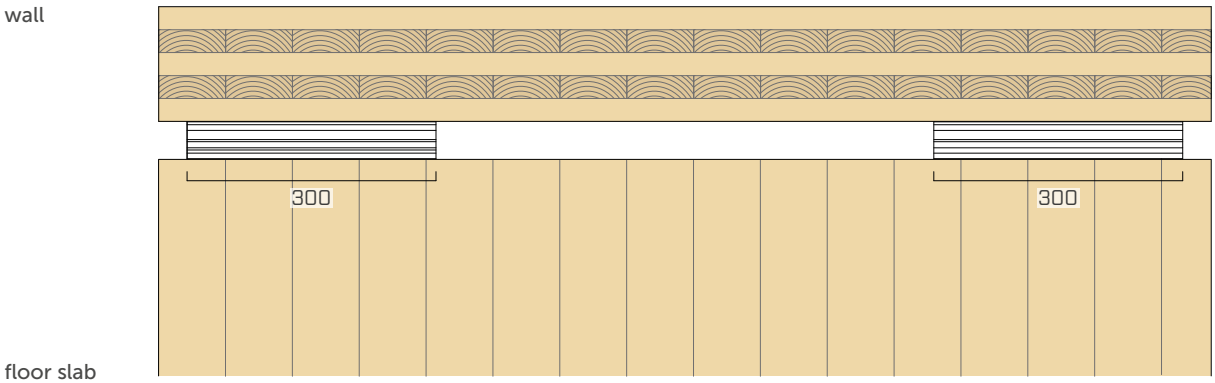

INSTALLATION | LOCK C FLOOR

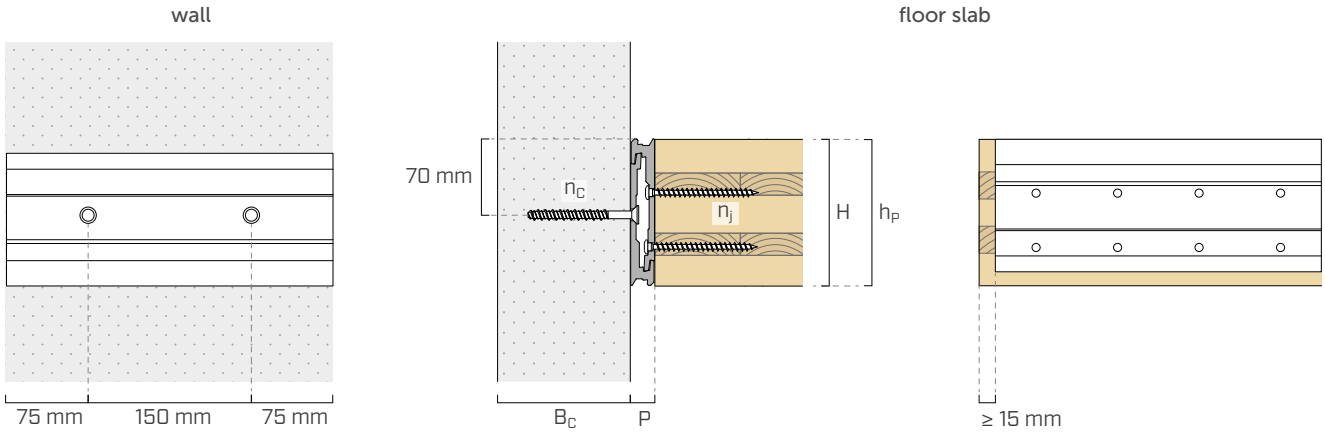

connector	B x H [mm]	no. of modules(1)	fasteners SKS anchors n_c - Ø x L [mm]	concrete wall B_c [mm]	fasteners LBS screws n_j - Ø x L [mm]	CLT floor h_p [mm]
LOCKCFLOOR135	300 x 135	1	2 - Ø10 x 100	120	8 - Ø7 x 80	135
	600 x 135	2	4 - Ø10 x 100		16 - Ø7 x 80	
	900 x 135	3	6 - Ø10 x 100		24 - Ø7 x 80	
	1200 x 135	4	8 - Ø10 x 100		32 - Ø7 x 80	

(1) The 1200 mm long connector can be cut into 300 mm standard length modules.

MOUNTING

VIDEO

LOCK T FLOOR - VISIBLE INSTALLATION

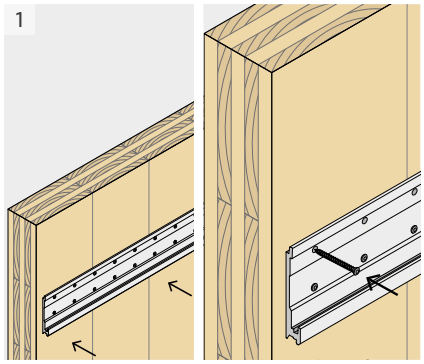

Place the connector on the wall and fasten all screws.

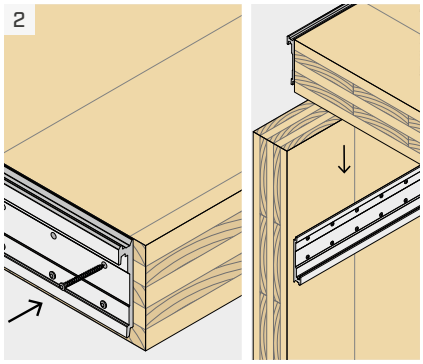

Place the connector on the floor and install all screws.
Engage the floor from the top to the bottom. Make sure that the two LOCK FLOOR connectors are parallel to each other and avoid subjecting them to excessive strain during installation.

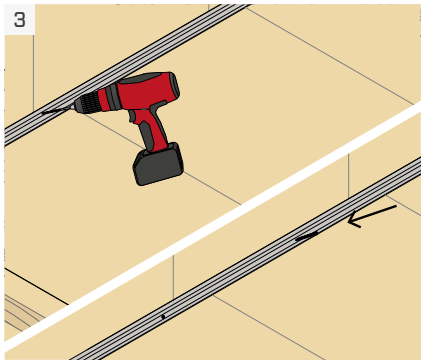

It is possible to install screws for uplift, and lateral shear transfer, F_{up} and F_{up} by drilling Ø5 inclined holes at 45° in the upper part of the connector.
A Ø5 screw must be installed in the hole.

LOCK C FLOOR - VISIBLE INSTALLATION

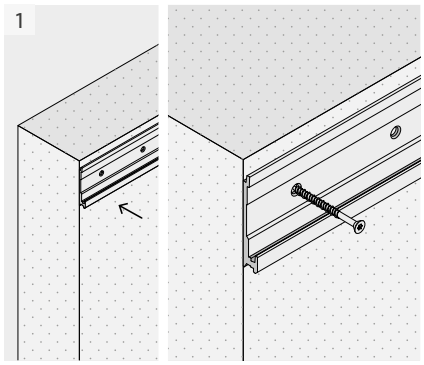

Place the connector on concrete and fasten the anchors according to the installation instructions.

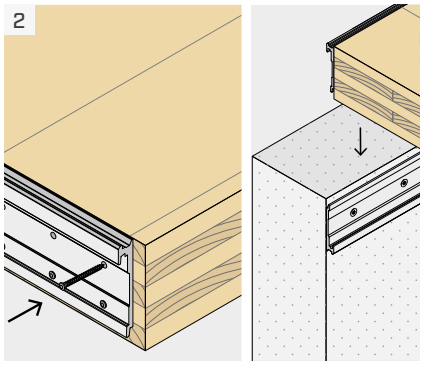

Place the connector on the floor and install all screws.
Engage the floor from the top to the bottom.

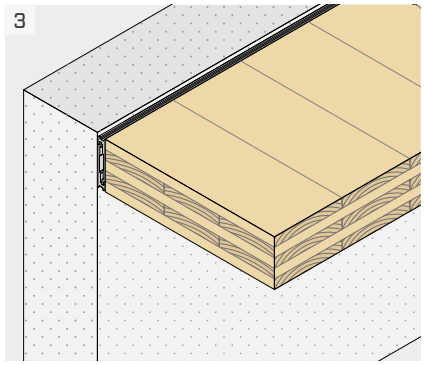

Make sure that the two LOCK FLOOR connectors are parallel to each other and avoid subjecting them to excessive strain during installation.

LOCK T FLOOR - CONCEALED INSTALLATION

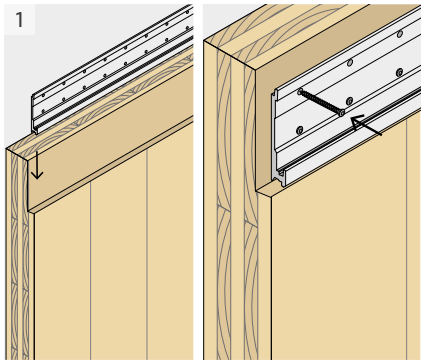

Cut the routing on the main element. Place the connector on the wall and fasten all screws.

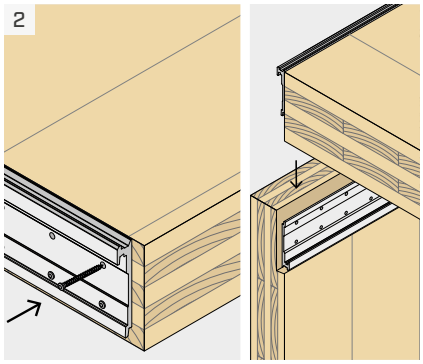

Place the connector on the floor and install all screws.
Engage the floor from the top to the bottom. Make sure that the two LOCK FLOOR connectors are parallel to each other and avoid subjecting them to excessive strain during installation.

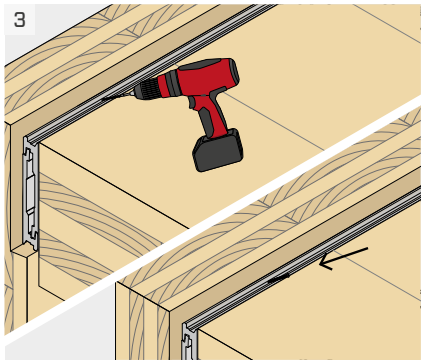

It is possible to install screws for uplift, and lateral shear transfer, F_{up} and F_{up} by drilling Ø5 inclined holes at 45° in the upper part of the connector.
A Ø5 screw must be installed in the hole.

STRUCTURAL VALUES | TIMBER-TO-TIMBER | F_V

CLT wall | CLT floor

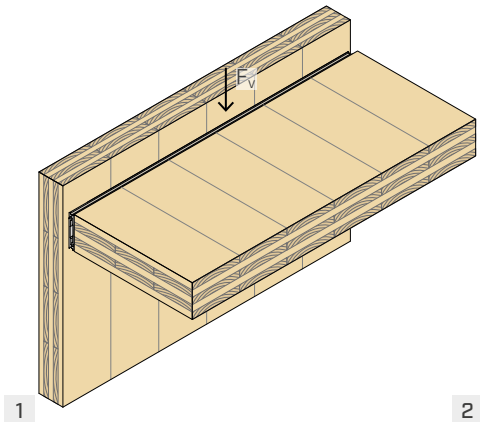

1

beam | CLT floor

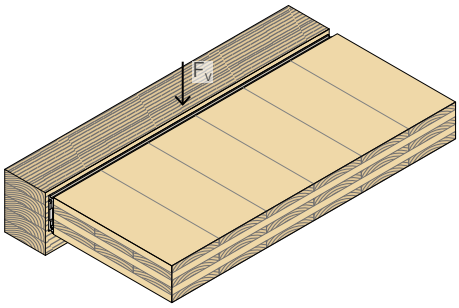

2

beam | CLT façade

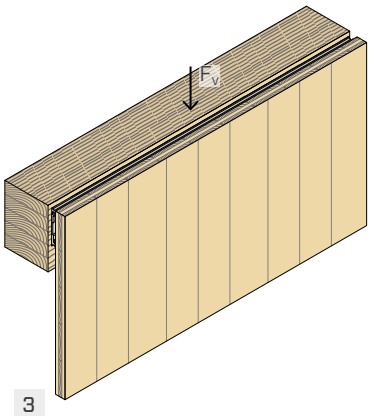

3

connector	B x H [mm]	no. of modules[1]	fasteners LBS screw $n_H + n_j$ - Ø x L [mm]	$R_{v,k\ timber}$ 1 [kN]	2 [kN]	3 [kN]
LOCKTFLOOR135	300 x 135	1	8+8 - Ø7x80	**21,4**	**21,4**	**28,5**
	600 x 135	2	16+16 - Ø7x80	**42,7**	**42,7**	**57,0**
	900 x 135	3	24+24 - Ø7x80	**64,1**	**64,1**	**85,6**
	1200 x 135	4	32+32 - Ø7x80	**85,5**	**85,5**	**114,1**

STRUCTURAL VALUES | TIMBER-TO-TIMBER | F_{ax}

CLT wall | CLT floor

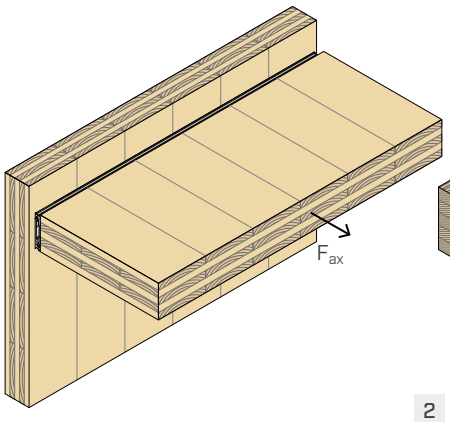

1

beam | CLT floor

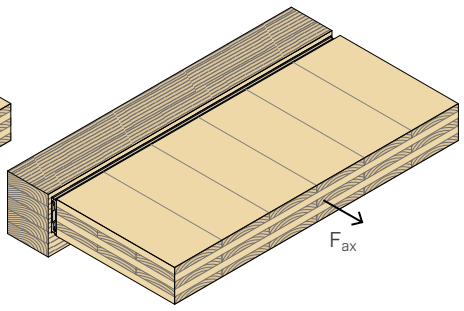

2

beam | CLT façade

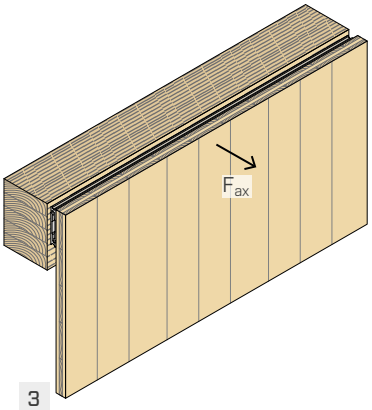

3

connector	B x H [mm]	no. of modules[1]	fasteners LBS screw $n_H + n_j$ - Ø x L [mm]	$R_{ax,k\ timber}$ 1 [kN]	2 [kN]	3 [kN]	$R_{ax,k\ alu}$ [kN]
LOCKTFLOOR135	300 x 135	1	8+8 - Ø7x80	**28,5**	**28,5**	**37,9**	**32,3**
	600 x 135	2	16+16 - Ø7x80	**57,1**	**57,1**	**75,8**	**64,6**
	900 x 135	3	24+24 - Ø7x80	**85,6**	**85,6**	**113,6**	**96,9**
	1200 x 135	4	32+32 - Ø7x80	**114,1**	**114,1**	**151,5**	**129,2**

NOTES

[1] The 1200 mm long connector can be cut into 300 mm standard length modules.

GENERAL PRINCIPLES

For the GENERAL PRINCIPLES of calculation, see page 59.

STRUCTURAL VALUES | TIMBER-TO-TIMBER | F_{lat}

CLT wall | CLT floor

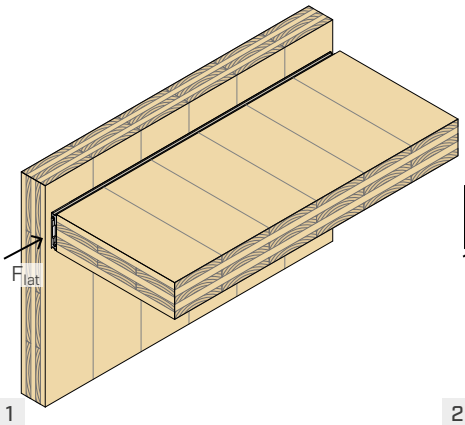

1

beam | CLT floor

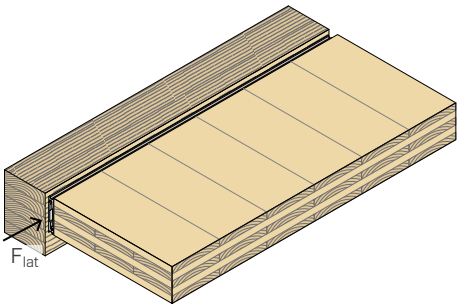

2

beam | CLT façade

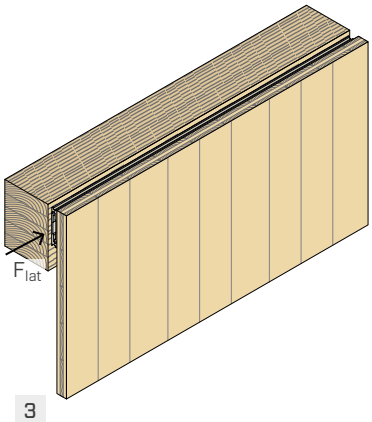

3

connector	B x H [mm]	no. of modules[1]	fasteners LBS screws $n_H + n_j$ - Ø x L [mm]	fasteners LBS 45° screw n - Ø x L [mm]	$R_{lat,k\ timber}$ 1 [kN]	2 [kN]	3 [kN]
LOCKTFLOOR135	300 x 135	1	8+8 - Ø7x80	6 - Ø5x70	**8,7**	**8,7**	**11,6**
	600 x 135	2	16+16 - Ø7x80	12 - Ø5x70	**24,6**	**21,4**	**21,4**
	900 x 135	3	24+24 - Ø7x80	18 - Ø5x70	**36,9**	**30,2**	**30,2**
	1200 x 135	4	32+32 - Ø7x80	24 - Ø5x70	**49,3**	**38,5**	**38,5**

STRUCTURAL VALUES | TIMBER-TO-CONCRETE | F_v

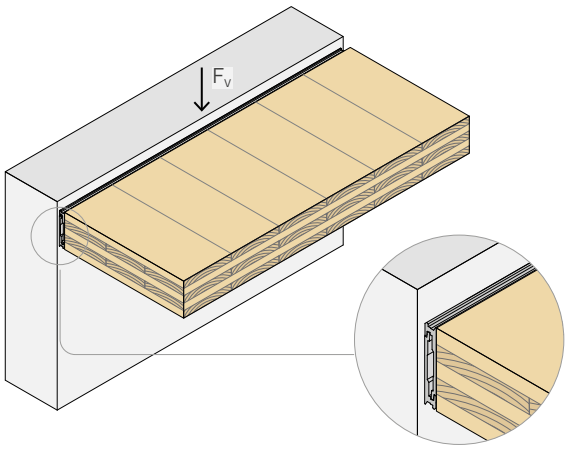

connector	B x H [mm]	no. of modules[1]	fasteners LBS screws n_j - Ø x L [mm]	$R_{v,k\ timber}$ [kN]	fasteners SKS anchors n_c - Ø x L [mm]	$R_{v,d\ concrete}$ [kN]
LOCKCFLOOR135	300 x 135	1	8+8 - Ø7x80	**21,4**	2 - Ø10x100	**20,0**
	600 x 135	2	16+16 - Ø7x80	**42,7**	4 - Ø10x100	**40,1**
	900 x 135	3	24+24 - Ø7x80	**64,1**	6 - Ø10x100	**60,2**
	1200 x 135	4	32+32 - Ø7x80	**85,5**	8 - Ø10x100	**80,3**

NOTES

[1] The 1200 mm long connector can be cut into 300 mm standard length modules.

GENERAL PRINCIPLES

For the GENERAL PRINCIPLES of calculation, see page 59.

STRUCTURAL VALUES | TIMBER-TO-CONCRETE | F_{ax}

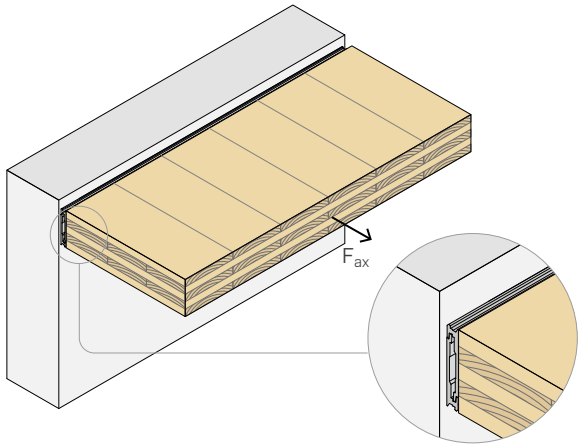

connector	B x H [mm]	no. ofmodules(1)	fasteners LBS screws n_j - Ø x L [mm]	$R_{ax,k\ timber}$ [kN]	fasteners SKS anchors n_c - Ø x L [mm]	$R_{ax,d\ concrete}$	$R_{ax,k\ alu}$ [kN]
LOCKCFLOOR135	300 x 135	1	8+8 - Ø7x80	**28,5**	2 - Ø10x100	**20,1**	**25,3**
	600 x 135	2	16+16 - Ø7x80	**57,1**	4 - Ø10x100	**39,2**	**50,6**
	900 x 135	3	24+24 - Ø7x80	**85,6**	6 - Ø10x100	**58,3**	**75,9**
	1200 x 135	4	32+32 - Ø7x80	**114,1**	8 - Ø10x100	**77,3**	**101,2**

NOTES

(1) The 1200 mm long connector can be cut into 300 mm standard length modules.

GENERAL PRINCIPLES

For the GENERAL PRINCIPLES of calculation, see page 59.

DESIGN OF ALTERNATE FASTENERS AND ANCHORS

For fastening with anchors other than those indicated in the table, the calculation on concrete may be performed with reference to the ETA of the chosen anchor and the diagrams below.

In the same way, the calculation of fasteners on steel can be carried out in accordance with national design standards for steel structures, following the diagrams below.

The fastener group shall be designed for shear force and eccentric moment equal to:

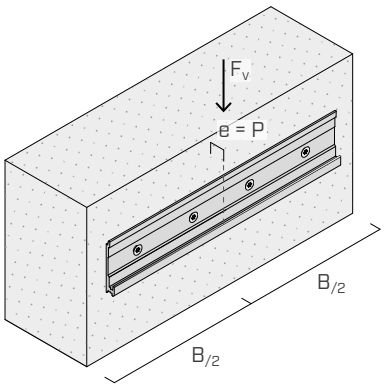

$V_d = F_{v,d}$

$M_d = e \cdot F_{v,d}$

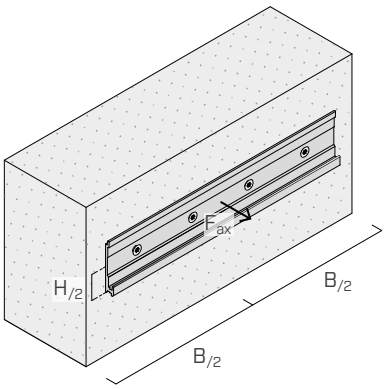

$V_{ax,d} = F_{ax,d}$

where:
e = 22 mm for LOCKTFLOOR135
H = 135 mm hight of LOCK FLOOR connector
B width of the LOCK FLOOR connector

GENERAL PRINCIPLES

- Dimensioning and verification of concrete and timber elements must be carried out separately. In particular, it is recommended to perform a splitting check for loads perpendicular to the grain of timber elements.
- The connector must always be fully fastened using all the holes.
- Fastening with partial nailing. Screws with the same length must be used for each connector half.
- Pre-drilling holes are not required for screws on secondary beam, with density $\rho_k \leq 420$ kg/m^3.
- In the calculation phase, a strength class of C25/30 concrete with thin reinforcement was considered, in the absence of spacing and distances from the edge and minimum thickness indicated in the installation tables. The strength values are valid for the calculation hypothesis defined in the table; for boundary conditions different from those in the table (e.g. minimum distances from the edge or different concrete thickness), the concrete strength must be calculated separately (see the DESIGN OF ALTERNATE FASTENERS AND ANCHORS section).
- The coefficients k_{mod} and γ_M should be taken according to the current regulations used for the calculation.
- The following verification shall be satisfied for combined loading:

$$\left(\frac{F_{ax,d}}{R_{ax,d}}\right)^2 + \left(\frac{F_{v,d}}{R_{v,d}}\right)^2 + \left(\frac{F_{lat,d}}{R_{lat,d}}\right)^2 \leq 1$$

STRUCTURAL VALUES | F_{lat}

- Values calculated according to EN 1995:2014 and ETA-19/0831 for screws without pre-drilling hole. ρ_k = 350 kg/m^3 for CLT and ρ_k = 385 kg/m^3 for GL24h have been considered for calculations.
- Design values can be obtained from characteristic values as follows:

$$R_{lat,d} = \frac{R_{lat,k\ timber} \cdot k_{mod}}{\gamma_M}$$

STRUCTURAL VALUES | F_V | F_{ax}

- Values calculated according to EN 1995:2014 and ETA-19/0831 for screws without pre-drilling hole. ρ_k = 350 kg/m^3 for CLT and ρ_k = 385 kg/m^3 for GL24h have been considered for calculations.
- Design values of concrete anchors are in accordance with ETA-24/0024.
- Design values can be obtained from characteristic values as follows:

TIMBER-TO-TIMBER

$$R_{v,d} = \frac{R_{v,k\ timber} \cdot k_{mod}}{\gamma_M}$$

$$F_{ax,d} = min \begin{cases} \dfrac{R_{ax,k\ timber} \cdot k_{mod}}{\gamma_M} \\ \dfrac{R_{ax,k\ alu}}{\gamma_{M2}} \end{cases}$$

TIMBER-TO-CONCRETE

$$R_{v,d} = min \begin{cases} \dfrac{R_{v,k\ timber} \cdot k_{mod}}{\gamma_M} \\ R_{v,d\ concrete} \end{cases}$$

$$R_{ax,d} = min \begin{cases} R_{ax,d\ timber} = \dfrac{R_{ax,k\ timber} \cdot k_{mod}}{\gamma_M} \\ R_{ax,d\ alu} = \dfrac{R_{ax,k\ alu}}{\gamma_{M2}} \\ R_{ax,d\ concrete} \end{cases}$$

where:

- γ_{M2} is the partial safety coefficient of the aluminium material subject to tensile stress, to be taken according to the national standards used for calculation. If there are no other provisions, it is suggested to use the value provided by EN 1999-1-1, equal to γ_{M2} = 1.25.

CONNECTION STIFFNESS | F_V

- Connection stiffness can be calculated according to ETA-19/0831, with the following equation:

$$K_{v,ser} = \frac{n \cdot \rho_m^{1,5} \cdot d^{0,8}}{30} \ N/mm$$

where:

- d is the nominal diameter of the screw in the secondary beam, in mm;
- ρ_m is the average density of the secondary beam, in kg/m^3;
- n is the number of screws in the secondary beam.

INTELLECTUAL PROPERTY

- A LOCKTFLOOR model is protected by the Registered Community Design RCD 008254353-0011.

UV T

TIMBER-TO-TIMBER DOVETAIL CONNECTOR

COMPLETE RANGE
Available in five versions, to adapt to the secondary beam and the applied load. Strength over 60 kN.

REMOVABLE
The hanging system is quick to install and can be easily removed; ideal for the construction of temporary structures.

PRECISE
The dovetail geometry allows for a precise and aesthetically pleasing connection.

VIDEO

ETA

SERVICE CLASS SC1 SC2

MATERIAL

alu 6082 EN AW-6082 aluminium alloy

EXTERNAL LOADS

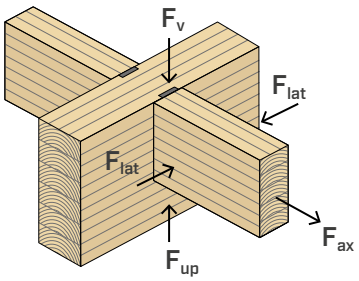

VIDEO
Scan the QR Code and watch the video on our YouTube channel





FIELDS OF USE

Concealed beam joint in timber-to-timber configuration, suitable for gazebos, floors or roofs.

Can be applied to:
- solid timber softwood and hardwood
- glulam, LVL



ALL DIRECTIONS

The inclined screws fixed in the secondary beam guarantee strength in all directions: vertical, horizontal and axial. The joint is safe even in the presence of wind and earthquake forces.

FAST ASSEMBLY

The installation is intuitive, simple and fast. The locking screw prevents pull-out, guaranteeing also strength in the direction opposite to insertion.

CODES AND DIMENSIONS

UV T

CODE	B [mm]	H [mm]	s [mm]	*B [in]*	*H [in]*	*s [in]*	$Ø_{90°}$ [mm]	$Ø_{45°}$ [mm]	pcs
UVT3070	30	70	16	*1 3/16*	*2 3/4*	*0.63*	5	4	25
UVT4085	40	85	16	*1 9/16*	*3 3/8*	*0.63*	5	6	25
UVT60115	60	115	16	*2 3/8*	*4 1/2*	*0.63*	5	6	25
UVT60160	60	160	16	*2 3/8*	*6 1/4*	*0.63*	5	6	10
UVT60215	60	215	16	*2 3/8*	*8 7/16*	*0.63*	5	6	10

Screws not included in the box.

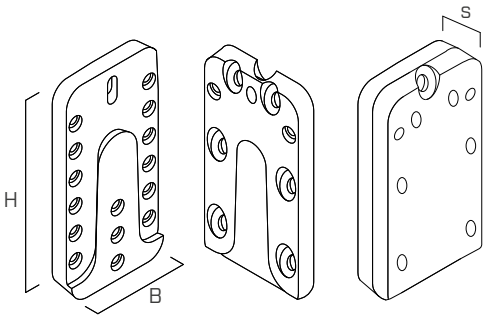

GEOMETRY

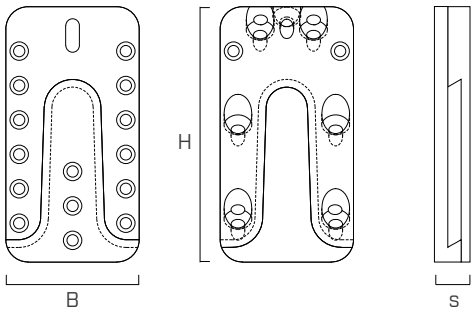

FASTENERS

LBS: 90° screw

CODE	d_1 [mm]	L [mm]	b [mm]	TX	pcs
LBS550	5	50	46	TX 20	200
LBS560	5	60	56	TX 20	200
LBS570	5	70	66	TX 20	200

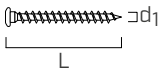

HBS: 45° screw for UVT3070

CODE	d_1 [mm]	L [mm]	b [mm]	TX	pcs
HBS450	4	50	30	TX 20	400
HBS470	4	70	40	TX 20	200

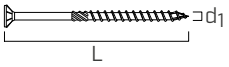

VGS: 45° screw for UVT4085 / UVT60115 / UVT60160 / UVT60215

CODE	d_1 [mm]	L [mm]	b [mm]	TX	pcs
VGS6100	6	100	88	TX 30	100
VGS6160	6	160	148	TX 30	100

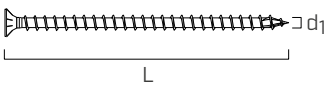

	MAXIMUM NUMBER OF FASTENERS FOR EACH CONNECTOR (full fastening)	
CODE	$n_{90°}$ [pcs - Ø]	$n_{45°}$ [pcs - Ø]
UVT3070	8 - LBS Ø5	6 (+1) - HBS Ø4
UVT4085	11 - LBS Ø5	4 (+1) - VGS Ø6
UVT60115	17 - LBS Ø5	6 (+1) - VGS Ø6
UVT60160	25 - LBS Ø5	6 (+1) - VGS Ø6
UVT60215	34 - LBS Ø5	8 (+1) - VGS Ø6

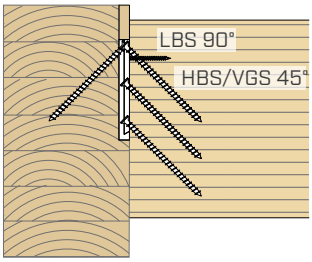

WOODEN ELEMENTS MINIMUM DIMENSIONS

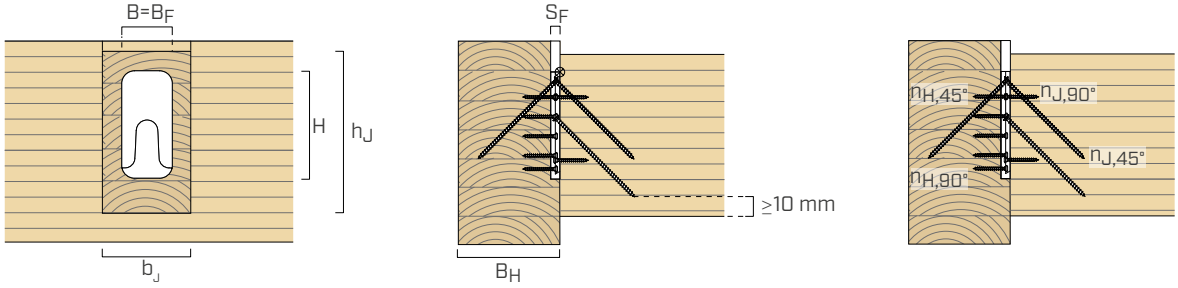

UV connector		45° screws	main beam			secondary beam[1]	
				routing			
type	B x H x s [mm]	Ø x L [mm]	B_H [mm]	B_F [mm]	S_F [mm]	$b_{j,min}$ [mm]	$h_{j,min}$ [mm]
UVT3070	30 x 70 x 16	HBS Ø4 x 50	45	30	16	45	100
		HBS Ø4 x 70	60			45	115
UVT4085	40 x 85 x 16	VGS Ø6 x 100	80	40	16	70	120
		VGS Ø6 x 160	120			70	160
UVT60115	60 x 115 x 16	VGS Ø6 x 100	80	60	16	80	180
		VGS Ø6 x 160	120			80	220
UVT60160	60 x 160 x 16	VGS Ø6 x 100	80	60	16	100	180
		VGS Ø6 x 160	120			100	220
UVT60215	60 x 215 x 16	VGS Ø6 x 100	80	60	16	100	220
		VGS Ø6 x 160	120			100	260

FASTENING PATTERNS

UVT3070

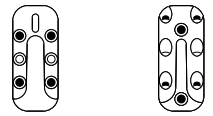

UVT4085

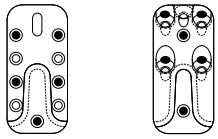

UVT60215

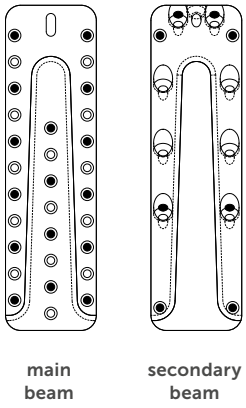

UVT60115

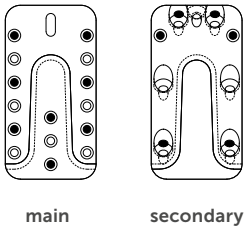

UVT60160

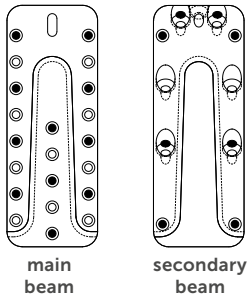

type	nailing		main beam		secondary beam	
			$n_{H,90°}$ [pcs - Ø]	$n_{H,45°}$[3] [pcs - Ø]	$n_{J,90°}$ [pcs - Ø]	$n_{J,45°}$ [pcs - Ø]
UVT3070	**total**	●+○	6 - LBS Ø5	1 - HBS Ø4	2 - LBS Ø5	6 - HBS Ø4
	partial[2]	●	4 - LBS Ø5	1 - HBS Ø4	2 - LBS Ø5	4 - HBS Ø4
UVT4085	**total**	●+○	9 - LBS Ø5	1 - VGS Ø6	2 - LBS Ø5	4 - VGS Ø6
	partial[2]	●	5 - LBS Ø5	1 - VGS Ø6	2 - LBS Ø5	4 - VGS Ø6
UVT60115	**total**	●+○	15 - LBS Ø5	1 - VGS Ø6	2 - LBS Ø5	6 - VGS Ø6
	partial[2]	●	8 - LBS Ø5	1 - VGS Ø6	2 - LBS Ø5	4 - VGS Ø6
UVT60160	**total**	●+○	21 - LBS Ø5	1 - VGS Ø6	4 - LBS Ø5	6 - VGS Ø6
	partial[2]	●	11 - LBS Ø5	1 - VGS Ø6	4 - LBS Ø5	4 - VGS Ø6
UVT60215	**total**	●+○	30 - LBS Ø5	1 - VGS Ø6	4 - LBS Ø5	8 - VGS Ø6
	partial[2]	●	16 - LBS Ø5	1 - VGS Ø6	4 - LBS Ø5	4 - VGS Ø6

STRUCTURAL VALUES | TIMBER-TO-TIMBER | F_{ax} | F_v | F_{up} | F_{lat}

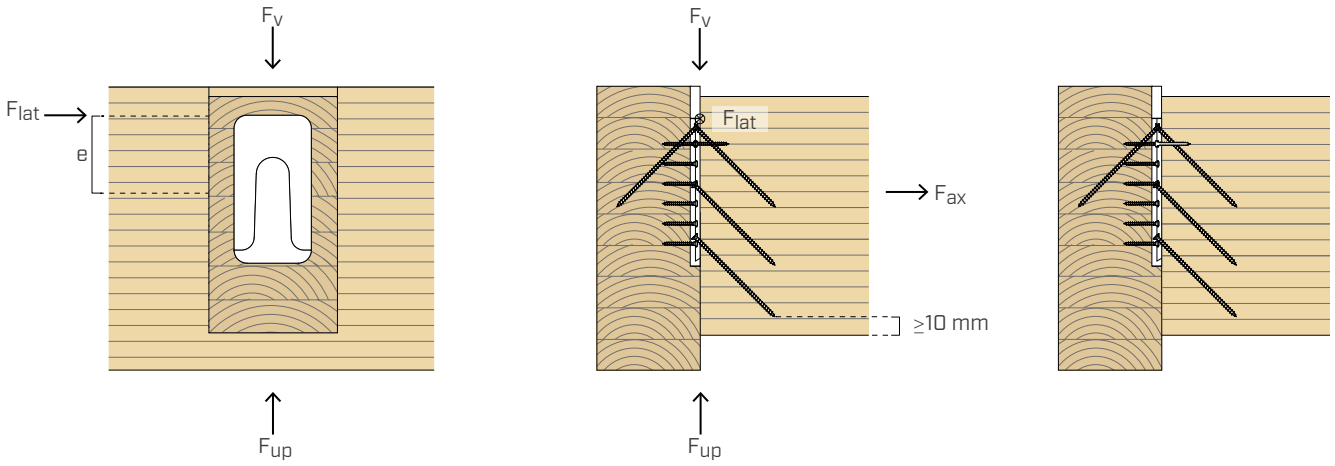

			UVT3070				UVT4085			
			total fastening ● + ○		partial fastening ●		total fastening ● + ○		partial fastening ●	
			45° screws		45° screws		45° screws		45° screws	
			HBS Ø4 x 50	HBS Ø4 x 70	HBS Ø4 x 50	HBS Ø4 x 70	VGS Ø6 x 100	VGS Ø6 x 160	VGS Ø6 x 100	VGS Ø6 x 160
			[kN]	[kN]	[kN]	[kN]	[kN]	[kN]	[kN]	[kN]
90° screws	LBS Ø5 x 50	$R_{ax,k}$	**1,5**	**1,5**	1,5	1,5	**1,5**	**1,5**	1,5	1,5
		$R_{v,k}$	**6,8**	**9,0**	4,5	6,0	**18,7**	**19,2**	10,7	10,7
		$R_{up,k}$	**1,1**	**1,5**	1,1	1,5	**4,7**	**7,9**	4,7	7,9
		$R_{lat,k}$	**1,7**	**1,8**	1,5	1,6	**1,5**	**1,5**	1,5	1,5
	LBS Ø5 x 60	$R_{ax,k}$	**1,8**	**1,8**	1,8	1,8	**1,8**	**1,8**	1,8	1,8
		$R_{v,k}$	**6,8**	**9,0**	4,5	6,0	**18,7**	**20,4**	11,3	11,3
		$R_{up,k}$	**1,1**	**1,5**	1,1	1,5	**4,7**	**7,9**	4,7	7,9
		$R_{lat,k}$	**1,7**	**1,8**	1,5	1,6	**1,6**	**1,6**	1,6	1,6
	LBS Ø5 x 70	$R_{ax,k}$	**2,1**	**2,1**	2,1	2,1	**2,1**	**2,1**	2,1	2,1
		$R_{v,k}$	**6,8**	**9,0**	4,5	6,0	**18,7**	**21,6**	12,0	12,0
		$R_{up,k}$	**1,1**	**1,5**	1,1	1,5	**4,7**	**7,9**	4,7	7,9
		$R_{lat,k}$	**1,7**	**1,8**	1,5	1,6	**1,6**	**1,6**	1,6	1,6

			UVT60115				UVT60160			
			total fastening ● + ○		partial fastening ●		total fastening ● + ○		partial fastening ●	
			45° screws		45° screws		45° screws		45° screws	
			VGS Ø6 x 100	VGS Ø6 x 160	VGS Ø6 x 100	VGS Ø6 x 160	VGS Ø6 x 100	VGS Ø6 x 160	VGS Ø6 x 100	VGS Ø6 x 160
			[kN]	[kN]	[kN]	[kN]	[kN]	[kN]	[kN]	[kN]
90° screws	LBS Ø5 x 50	$R_{ax,k}$	**1,5**	**1,5**	1,5	1,5	**2,9**	**2,9**	2,9	2,9
		$R_{v,k}$	**28,0**	**32,0**	17,1	17,1	**28,0**	**44,9**	18,7	23,5
		$R_{up,k}$	**4,7**	**7,9**	4,7	7,9	**4,7**	**7,9**	4,7	7,9
		$R_{lat,k}$	**2,6**	**2,6**	2,2	2,2	**3,0**	**3,0**	2,7	2,7
	LBS Ø5 x 60	$R_{ax,k}$	**1,8**	**1,8**	1,8	1,8	**3,5**	**3,5**	3,5	3,5
		$R_{v,k}$	**28,0**	**34,0**	18,1	18,1	**28,0**	**47,1**	18,7	24,9
		$R_{up,k}$	**4,7**	**7,9**	4,7	7,9	**4,7**	**7,9**	4,7	7,9
		$R_{lat,k}$	**2,7**	**2,7**	2,3	2,3	**3,2**	**3,2**	2,8	2,8
	LBS Ø5 x 70	$R_{ax,k}$	**2,1**	**2,1**	2,1	2,1	**4,2**	**4,2**	4,2	4,2
		$R_{v,k}$	**28,0**	**36,0**	18,7	19,2	**28,0**	**47,1**	18,7	26,4
		$R_{up,k}$	**4,7**	**7,9**	4,7	7,9	**4,7**	**7,9**	4,7	7,9
		$R_{lat,k}$	**2,8**	**2,8**	2,4	2,4	**3,3**	**3,3**	3,0	3,0

STRUCTURAL VALUES | TIMBER-TO-TIMBER | F_{ax} | F_v | F_{up} | F_{lat}

			UVT60215			
			total fastening ● + ○		partial fastening ●	
			45° screws		45° screws	
			VGS Ø6 x 100	VGS Ø6 x 160	VGS Ø6 x 100	VGS Ø6 x 160
			[kN]	[kN]	[kN]	[kN]
90° screws	LBS Ø5 x 50	$R_{ax,k}$	**2,9**	**2,9**	2,9	2,9
		$R_{v,k}$	**37,3**	**62,8**	18,7	31,4
		$R_{up,k}$	**4,7**	**7,9**	4,7	7,9
		$R_{lat,k}$	**3,4**	**3,4**	2,8	2,8
	LBS Ø5 x 60	$R_{ax,k}$	**3,5**	**3,5**	3,5	3,5
		$R_{v,k}$	**37,3**	**62,8**	18,7	31,4
		$R_{up,k}$	**4,7**	**7,9**	4,7	7,9
		$R_{lat,k}$	**3,5**	**3,5**	2,9	2,9
	LBS Ø5 x 70	$R_{ax,k}$	**4,2**	**4,2**	4,2	4,2
		$R_{v,k}$	**37,3**	**62,8**	18,7	31,4
		$R_{up,k}$	**4,7**	**7,9**	4,7	7,9
		$R_{lat,k}$	**3,7**	**3,7**	3,0	3,0

NOTES

(1) The minimum dimensions of the wooden elements vary when the stress direction varies and must be checked on a time-by-time basis. The table shows the minimum dimensions in order to guide the designer in the choice of the connector. Dimensioning and verification of the timber elements must be carried out separately.

(2) Partial fastening must be carried out according to the installation diagrams shown in the figure and in accordance with ETA.

(3) In case of Fv or Fup stress, an additional inclined screw is required in the main beam to be inserted after installing the connector.

GENERAL PRINCIPLES

- Characteristic values are consistent with EN 1995:2014 and in accordance with the product ETA.
- Design values can be obtained from characteristic values as follows:

$$R_d = \frac{R_k \cdot k_{mod}}{\gamma_M}$$

  The coefficients k_{mod} and γ_M should be taken according to the current regulations.
- A timber density of ρ_k = 350 kg/m^3 was considered for the calculation process.
- Dimensioning and verification of the timber elements must be carried out separately.
- The following verification shall be satisfied for combined loading:

$$\left(\frac{F_{ax,d}}{R_{ax,d}} + \frac{F_{v/up,d}}{R_{v/up,d}}\right)^2 + \left(\frac{F_{lat,d}}{R_{lat,d}}\right)^2 \leq 1$$

- Full fastening for beam applications or partial fastening for column applications is possible. On the secondary beam side, inclined screws must always be inserted in the upper two holes and the two lower holes.
- Lateral stress F_{lat} is assumed to act at a distance e = H/2 from the center of the connector. For different values of "e" it is possible to calculate the strength values according to ETA.
- It is assumed that the main beam is prevented from rotating. If the UV T connector is installed on only one side of the beam, the main beam must be checked for a torque caused by eccentricity $M_v = F_d \cdot (B_H/2 \cdot 14\ mm)$. This applies in the case of connection on both sides of the main beam when the difference between the acting stresses is > 20%.

WOODY

TIMBER CONNECTOR FOR WALLS, FLOORS AND ROOFS

TIMBER'S ORIGINALITY
Connector for fast and precise assembly of prefabricated walls, floors or roofs made of TIMBER FRAME or CLT. The 28 mm deep dovetail allows a tolerance unachievable with metal plate systems.

STANDARD GEOMETRY
Milling on the timber element is easy to implement in the CAD/CAM drawing and is performed with standard CNC milling cutters (cylindrical or 15° dovetail milling cutter). The main CAD/CAM software have special macros for automated drawing.

NO ERRORS
Pre-holes on the timber element allow precise installation of the connector without the need to take measurements. The symmetrical geometry of the connectors avoids installation errors.

INSTALLATION
The connectors can be installed on any timber surface. In the case of installation on the side surface of the framed wall, the connector can be installed directly above the OSB, gypsum fibre or multi-layer timber panel.

USA, Canada and more design values available online.

VIDEO

DESIGN REGISTERED

SERVICE CLASS SC1 SC2

MATERIAL

multilayer timber

EXTERNAL LOADS

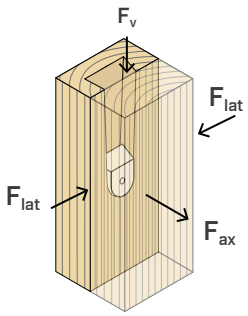

VIDEO
Scan the QR Code and watch the video on our YouTube channel

NEW TIMBER CONNECTOR







FIELDS OF USE

Assembly of walls, floors or roofs with TIMBER FRAME or CLT or LVL panels. It is also ideal for the fast and precise installation of stairs, façades or other non-structural components.

Can be applied to:
- TIMBER FRAME
- CLT, LVL
- solid timber or glulam components





SLENDER STRUCTURES

In the configuration with open milling, installation on timber components (TIMBER FRAME or CLT) with a thickness of 100 mm is possible.

CLT

Also ideal for speeding up the installation of CLT walls, floors, roofs or stairs. The WOODY165 connector can be assembled in a horizontal position to fit small thickness values.

CODES AND DIMENSIONS

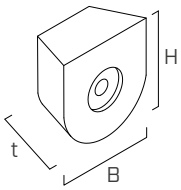

1

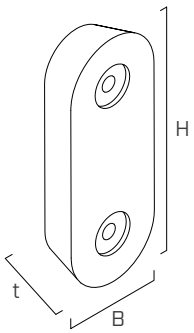

2

	CODE	B [mm]	H [mm]	t [mm]	*B [in]*	*H [in]*	*t [in]*	n_{screw} [pcs]	pcs
1	**WOODY65**	65	65	28	*2 9/16*	*2 9/16*	*1 1/8*	1	1
2	**WOODY165**	65	160	28	*2 9/16*	*6 1/2*	*1 1/8*	2	1

FASTENERS

TBS – flange head screw

CODE	d_1 [mm]	L [mm]	b [mm]	TX	pcs
TBS880	8	80	52	TX 40	50
TBS10100	10	100	52	TX 50	50

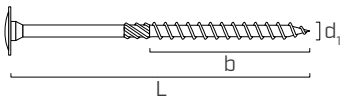

WOODY connectors can be used indiscriminately with the screws indicated in the table.

GEOMETRY

WOODY65

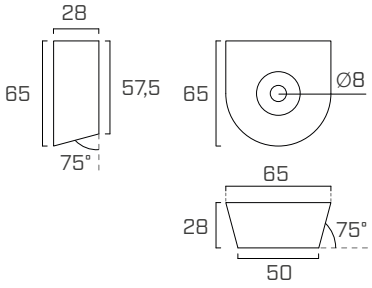

WOODY165

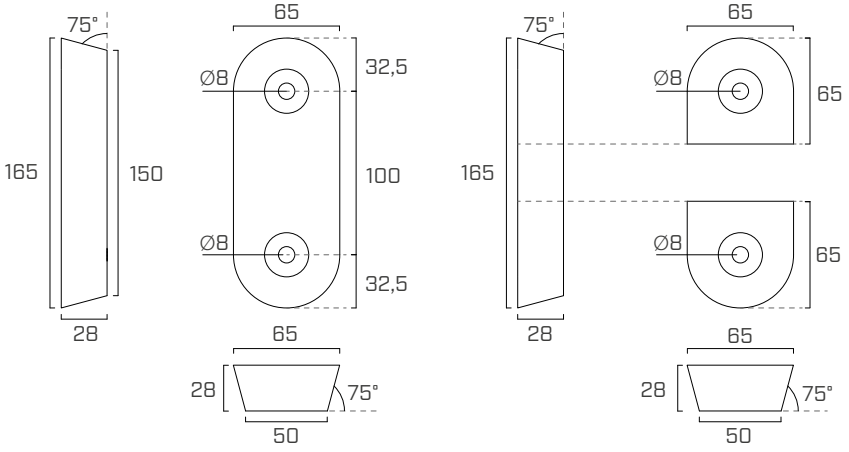

ONE CUT, TWO CONNECTORS: FROM WOODY165 TO WOODY65

The WOODY165 connector can be cut to obtain two WOODY65 connectors. This makes it possible to stock a single product and choose later which format to use.

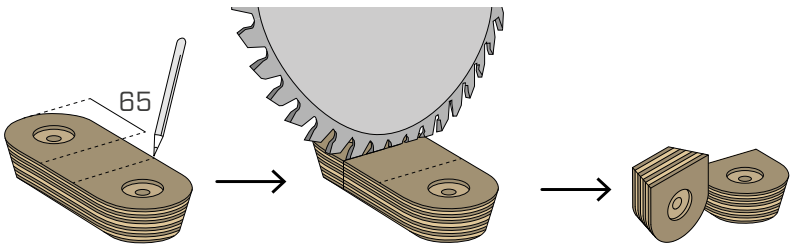

INSTALLATION

The geometry of the routing on the element to be fastened can be chosen as required. A non-binding geometry is shown, produced by means of a dovetail milling cutter with a 15° inclination and a 3-axis CNC machine.
Alternatively, a cylindrical milling cutter can be used with a 5-axis CNC machine.
An open routing cut with top-down installation or a closed routing cut with side-down installation is possible.
Leading CAD/CAM software have automated macros for routing and pre-drilling for screws.

WOODY65



WOODY165



OPEN ROUTING

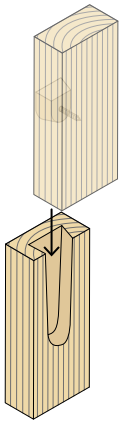

routing

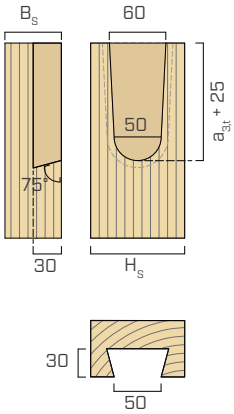

connector

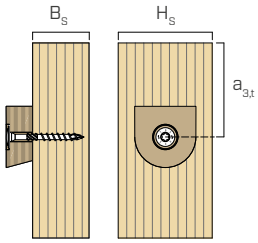

routing

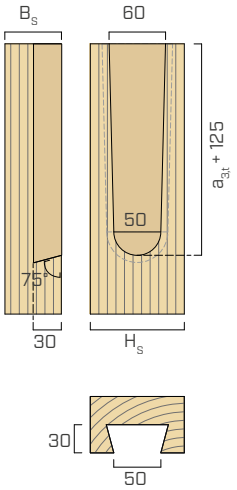

connector

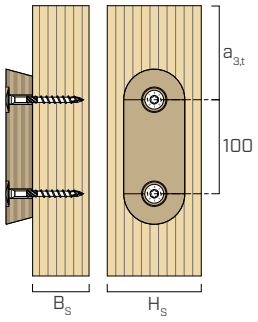

CLOSED ROUTING

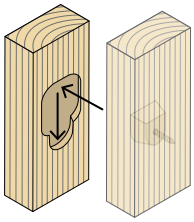

routing

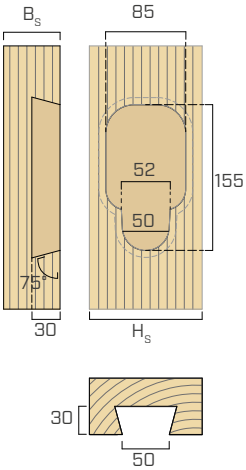

connector

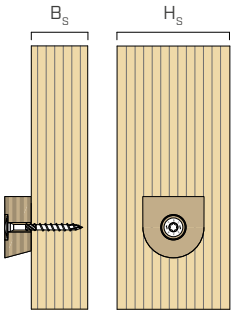

routing

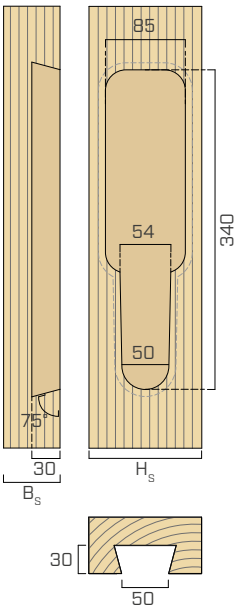

connector

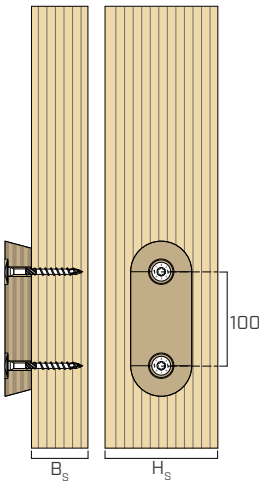

MINIMUM DISTANCES AND DIMENSIONS

CODE	$a_{3,t}$	$B_{s,min}$	$H_{s,min}$	
			open routing	closed routing
	[mm]	[mm]	[mm]	[mm]
WOODY65	100	60	100	120
WOODY165	100	60	100	120

MILLING OPTIONS

The routing on the element to be fastened can be positioned in two ways depending on the assembly sequence.

ROUTING TYPE

V

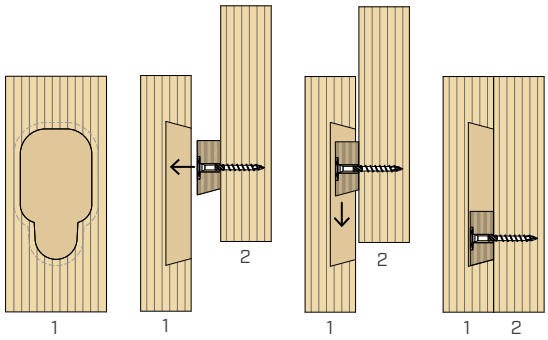

In the "V"-type routing, the seat for the connector is positioned at the bottom. The first wall to be installed (1) is the one with the routing, while the wall with the connector (2) is installed later.

ROUTING TYPE

A

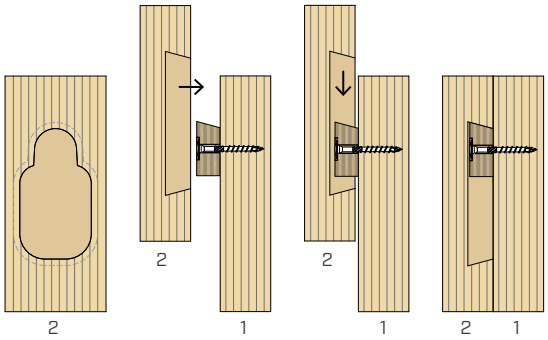

In the "A" type routing, the seat for the connector is positioned at the top. The first wall to be installed (1) is the one with the connector while the wall with the routing (2) is installed later.

TOLERANCES

The routing geometry proposed here allows a wide installation tolerance: **± 10 mm** horizontally and **± 25 mm** vertically.

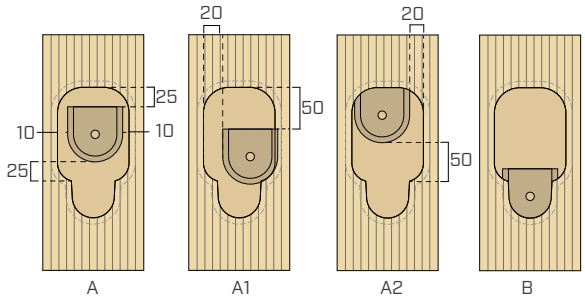

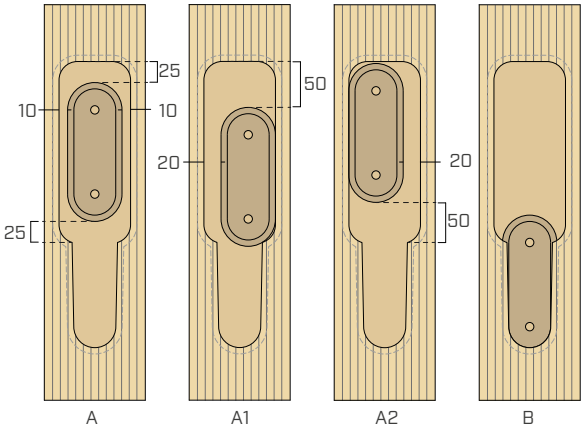

- A represents the connector inserted in the centre position of the routing
- A1 and A2 represent two possible positions during installation, in which tolerances are fully utilised
- B is the end position of the connector

MOUNTING

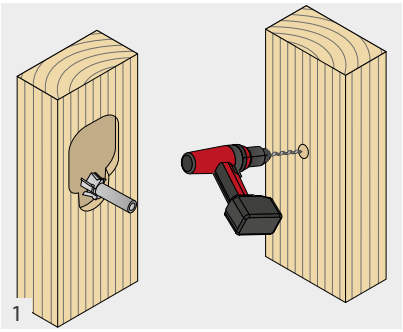

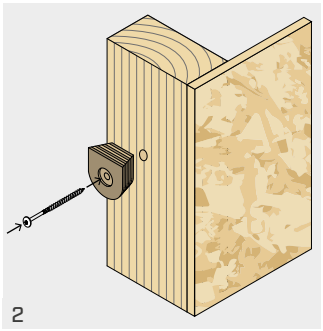

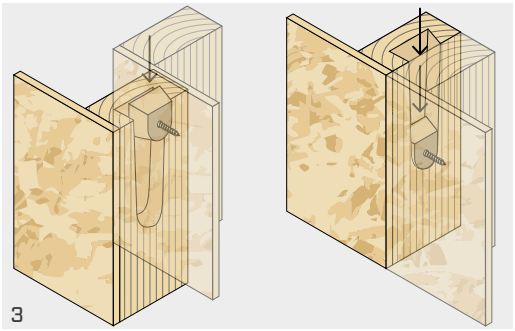

Carry out routing of the element to be fastened and pre-drilling hole with Ø5 holes on the element where the connector will be installed. Leading CAD/CAM software have automated macros for routing and pre-drilling for screws. Assemble the connector by installing it at the pre-holes, which act as tracking elements.

At the construction site, it is sufficient to install the walls, taking care to insert the connectors correctly into the grooves. The dovetail shape guides the walls into the correct position and allows the gap to be closed.

APPLICATION EXAMPLES

Here are some application examples for the most common geometries. All other geometries can be executed by applying the same principles, both for TIMBER FRAME and CLT walls.
The type V or type A routing determines the installation sequence of the walls. In the pictures, wall 1 is the one installed first, while wall 2 is installed later.

LINEAR JOINT

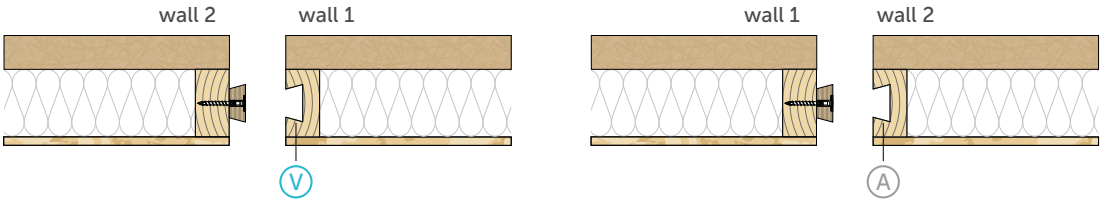

90° JOINT - CONNECTOR INSTALLED IN THE WALL THICKNESS

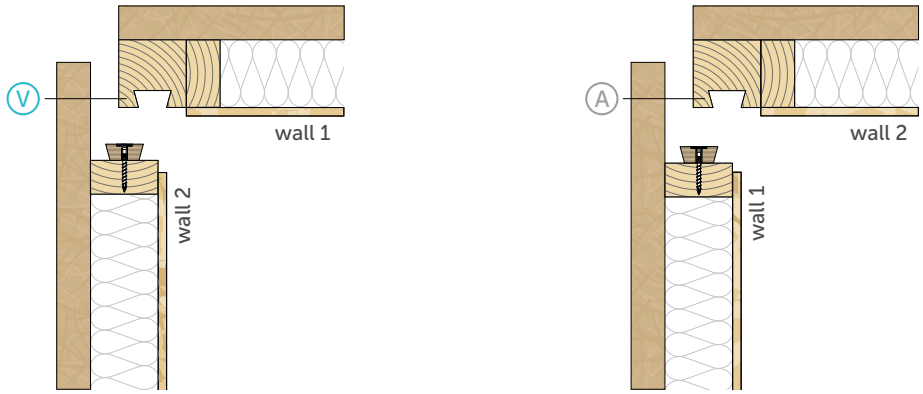

90° JOINT - CONNECTOR INSTALLED ON THE WALL SIDE

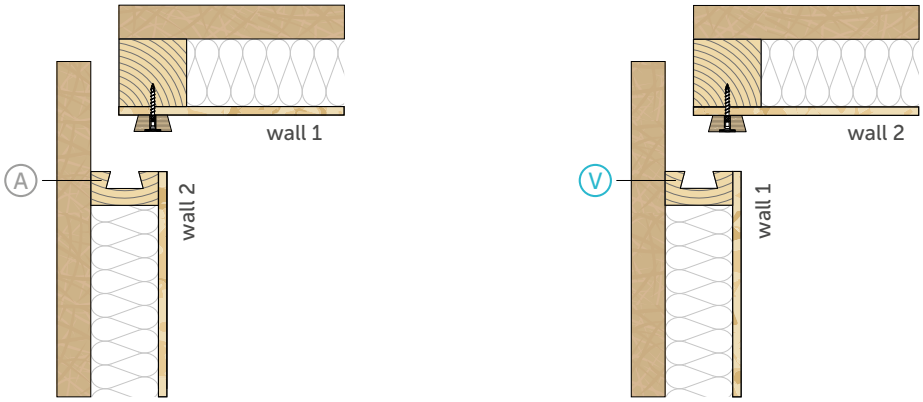

T-SHAPED JOINT

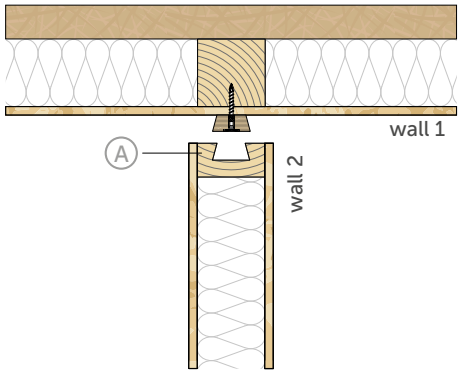

INCLINED JOINT

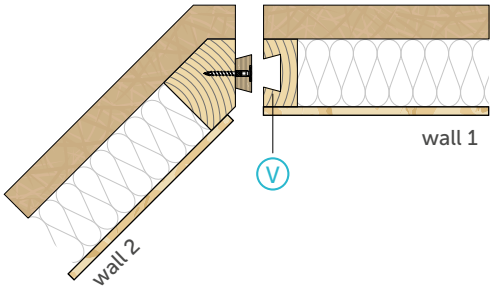

In the case of a connector installed on the side of the wall, no additional shim elements are required; the connector can be installed directly on the surface of the cladding board (OSB, gypsum fibreboard or plasterboard).

ALUMINI

CONCEALED BRACKET WITHOUT HOLES

VIDEO

MY PROJECT SOFTWARE

CE ETA-09/0361

SERVICE CLASS SC1 SC2 SC3

MATERIAL

alu 6060 EN AW-6060 aluminium alloy

EXTERNAL LOADS

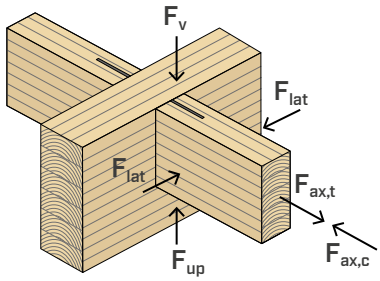

SLENDER STRUCTURES

The small width of the bracket allows to connect secondary beams with limited width (starting from 55 mm).

LONG VERSION

The 2165 mm long version can be cut every 30 mm to make brackets of the most suitable size. SBD self-drilling dowels allow maximum installation freedom.

INCLINED JOINTS

Certified strengths calculated in all directions: vertical, horizontal and axial. They can be used in inclined joints.

USA, Canada and more design values available online.

VIDEO

Scan the QR Code and watch the video on our YouTube channel





FIELDS OF USE

Concealed beam joint in timber-to-timber or timber-to-concrete configuration, suitable for small structures, gazebos and furniture. Use also outdoors in non aggressive environments.

Can be applied to:

- solid timber softwood and hardwood
- glulam, LVL



QUICK ASSEMBLING

The fastening, simple and fast, is realized through screws HBS PLATE EVO on the main beam and self-drilling or smooth dowels on the secondary beam.

INVISIBLE

The concealed connection provides a satisfying appearance to the joint and fulfils the fire safety requirements. When adequately protected by timber, it is suitable for outdoor use.

CODES AND DIMENSIONS

ALUMINI

CODE	type	H [mm]	*H [in]*	pcs
ALUMINI65	without holes	65	*2 9/16*	25
ALUMINI95	without holes	95	*3 3/4*	25
ALUMINI125	without holes	125	*4 15/16*	25
ALUMINI155	without holes	155	*6 1/8*	15
ALUMINI185	without holes	185	*7 1/4*	15
ALUMINI215	without holes	215	*8 7/16*	15
ALUMINI2165	without holes	2165	*85 1/4*	1

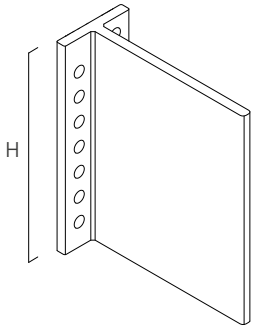

GEOMETRY

ALUMINI			
thickness	**s**	[mm]	6
flange width	**L_A**	[mm]	45
web length	**L_B**	[mm]	109,9
small flange-holes	**$Ø_1$**	[mm]	7,0

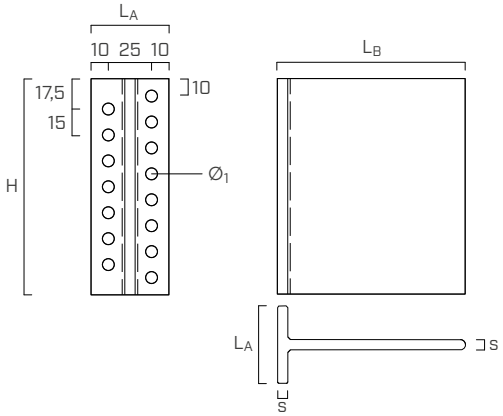

ADDITIONAL PRODUCTS - FASTENING

type	description		d [mm]	support	page
HBS PLATE EVO	C4 EVO pan head screw		5		573
SBD	self-drilling dowel		7,5		154
SKP	screw-in anchor with rounded head	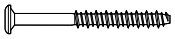	6		528
SKS	screw-in anchor with countersunk head	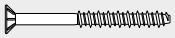	6		528
BITS	long bit	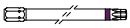	-	-	-

TIMBER-TO-CONCRETE FASTENING PATTERNS

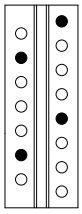
ALUMINI125

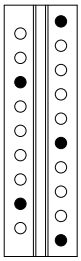
ALUMINI155

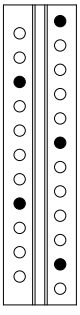
ALUMINI185

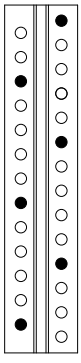
ALUMINI215

anchor	d_1 [mm]	L [mm]	d_0 [mm]	t_{fix} [mm]	TX
SKP680	6,0	80	5	30	TX 30
SKS660	6,0	60	5	10	TX 30

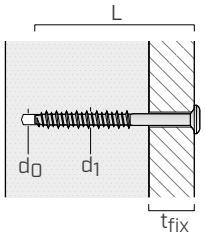

INSTALLATION

MINIMUM DISTANCES

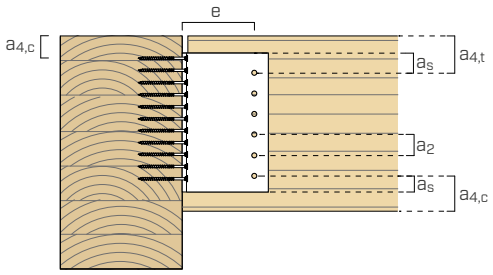

secondary beam-timber				self-drilling dowel SBD Ø7,5	smooth dowel STA Ø8
dowel-dowel	a_2	[mm]	≥ 3·d	≥ 23	≥ 24
dowel-top of beam	$a_{4,t}$	[mm]	≥ 4·d	≥ 30	≥ 32
dowel-bottom of beam	$a_{4,c}$	[mm]	≥ 3·d	≥ 23	≥ 24
dowel-bracket edge	a_s	[mm]	≥ 1,2·d_0 (1)	≥ 10	≥ 12
dowel-main beam	e	[mm]		86	86

(1) Hole diameter.

main beam-timber				screws HBS PLATE EVO Ø5
first connector-top of beam	$a_{4,c}$	[mm]	≥ 5·d	≥ 25

Minimum spacing and diameters refers to timber elements with density $\rho_k \leq 420$ kg/m^3, screws inserted without pre-drilling hole and stresses F_v.

MOUNTING

VIDEO

1

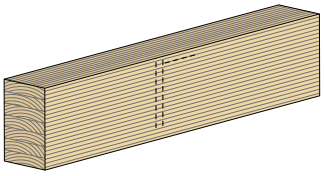

2

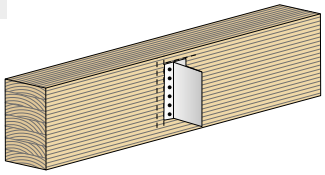

3

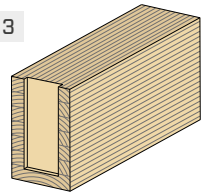

"BOTTOM-UP" INSTALLATION

4

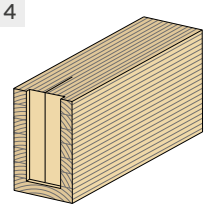

5

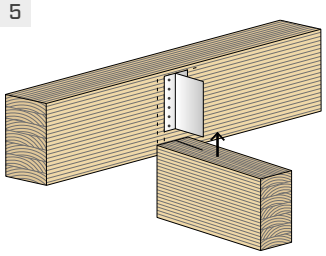

6

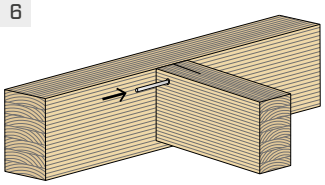

7

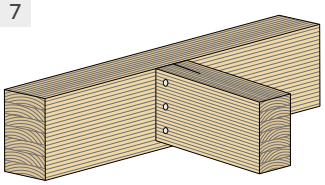

"AXIAL" INSTALLATION

4

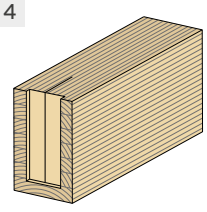

5

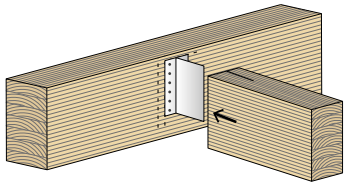

6

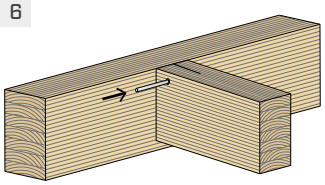

7

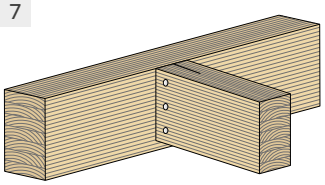

STRUCTURAL VALUES | TIMBER-TO-TIMBER | F_v | F_{up}

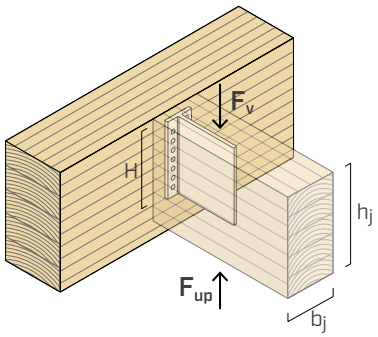

ALUMINI with SBD self drilling dowels and STA dowels

	SECONDARY BEAM		MAIN BEAM	
ALUMINI **H(1)** [mm]	**b_j x h_j** [mm]	**SBD dowels / STA dowels(2)** **SBD Ø7,5 x 55 / STA Ø8 x 60** [pcs]	**HBS PLATE EVO** **Ø5 x 60** [pcs]	**$R_{v,k}$ - $R_{up,k}$** **GL24h** [kN]
65	60 x 90	2	7	**2,9**
95	60 x 120	3	11	**7,1**
125	60 x 150	4	15	**12,9**
155	60 x 180	5	19	**19,9**
185	60 x 210	6	23	**27,9**
215(3)	60 x 240	7	27	**35,0**

STRUCTURAL VALUES | TIMBER-TO-TIMBER | F_{lat} | F_{ax}

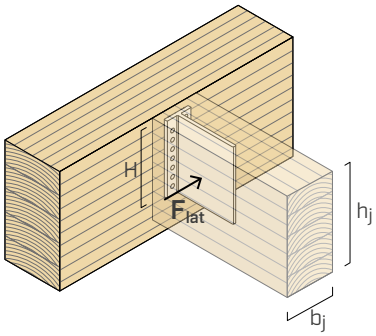

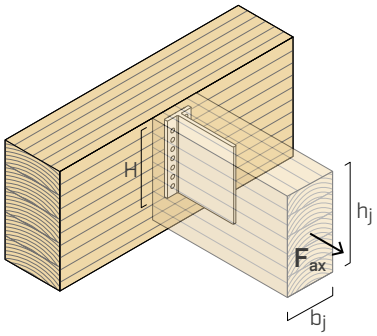

ALUMINI with SBD self drilling dowels and STA dowels

	SECONDARY BEAM		MAIN BEAM		
ALUMINI **H(1)** [mm]	**b_j x h_j** [mm]	**SBD dowels / STA dowels(2)** **SBD Ø7,5 x 55 / STA Ø8 x 60** [pcs]	**HBS PLATE EVO** **Ø5 x 60** [pcs]	**$R_{lat,k\ timber}$** **GL24h** [kN]	**$R_{lat,k\ alu}$** [kN]
65	60 x 90	2	7	**3,1**	**1,6**
95	60 x 120	3	11	**4,1**	**2,3**
125	60 x 150	4	15	**5,1**	**3,0**
155	60 x 180	5	19	**6,2**	**3,8**
185	60 x 210	6	23	**7,2**	**4,5**
215	60 x 240	7	27	**8,2**	**5,2**

ALUMINI with SBD self-drilling dowels

	SECONDARY BEAM		MAIN BEAM		
ALUMINI **H(1)** [mm]	**b_j x h_j** [mm]	**SBD dowels(2)** **SBD Ø7,5 x 55** [pcs]	**HBS PLATE EVO** **Ø5 x 60** [pcs]	**$R_{ax,k\ timber}$** **GL24h** [kN]	**$R_{ax,k\ alu}$** [kN]
65	60 x 90	2	7	**15,5**	**15,6**
95	60 x 120	3	11	**24,3**	**22,8**
125	60 x 150	4	15	**33,2**	**30,0**
155	60 x 180	5	19	**42,0**	**37,2**
185	60 x 210	6	23	**50,8**	**44,4**
215	60 x 240	7	27	**59,7**	**51,6**

RECOMMENDED STRUCTURAL VALUES | TIMBER-TO-CONCRETE | F_v

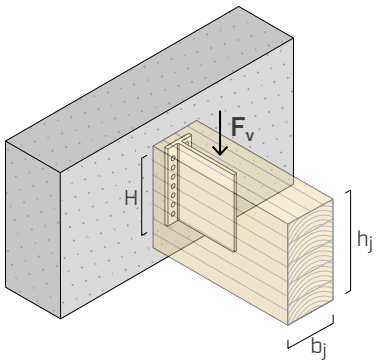

ALUMINI with SBD self drilling dowels and STA dowels

	SECONDARY BEAM					MAIN BEAM UNCRACKED CONCRETE	
ALUMINI		**SBD dowels(2)**		**STA dowels(2)**		**SKP680 / SKS660 anchor**	
H(1)	**b_j x h_j**	**Ø7,5 x 55**	**$R_{v,k}$**	**Ø8 x 60**	**$R_{v,k}$**	**Ø6 x 80 / Ø6 x 60**	**$R_{v,d\ concrete}$**
[mm]	[mm]	[pcs]	[kN]	[pcs]	[kN]	[pcs]	[kN]
125	60 x 150	3	**15,6**	3	**15,0**	4	**6,0**
155	60 x 180	3	**15,6**	3	**15,0**	5	**7,3**
185	60 x 210	4	**20,8**	4	**20,0**	5	**9,1**
215	60 x 240	5	**26,1**	5	**25,0**	6	**11,5**

NOTES

(1) The bracket with height H is available pre-cut (codes on page 74) or can be obtained from the ALUMINI2165 rod.

(2) SBD self-drilling dowels Ø7,5: $M_{y,k}$ = 42000 Nmm.
STA smooth dowel Ø8: $M_{y,k}$ = 24100 Nmm.

(3) ALUMINI215 bracket with 7 SBD dowels Ø7,5 x 55 $R_{v,k}$ = $R_{up,k}$ = 36,5 kN.

GENERAL PRINCIPLES

- Resistance values for the fastening system are valid for the calculation examples shown in the table. For different calculation methods, the MyProject software is available free of charge (www.rothoblaas.com).
- The calculation process used a timber characteristic density of ρ_k = 385 kg/m^3 and C20/25 concrete with a thin reinforcing layer, where edge-distance is not a limiting factor.
- The coefficients k_{mod} and γ_M should be taken according to the current regulations used for the calculation.
- Dimensioning and verification of timber and concrete elements must be carried out separately.
- The following verification shall be satisfied for combined loading:

$$\left(\frac{F_{v,d}}{R_{v,d}}\right)^2+\left(\frac{F_{lat,d}}{R_{lat,d}}\right)^2+\left(\frac{F_{ax,d}}{R_{ax,d}}\right)^2+\left(\frac{F_{up,d}}{R_{up,d}}\right)^2\leq 1$$

  $F_{v,d}$ and $F_{up,d}$ are forces acting in opposite directions. Therefore only one of the forces $F_{v,d}$ and $F_{up,d}$ can act in combination with the forces $F_{ax,d}$ or $F_{lat,d}$.
- The values provided are calculated with a routing in the 8 mm thick timber.
- For configurations for which only the timber-side strength is reported, the aluminium-side overstrength can be assumed.

STRUCTURAL VALUES | F_v | F_{up}

TIMBER-TO-TIMBER

- Characteristic values comply with the EN 1995:2014 standard in accordance with ETA-09/0361.
- Design values can be obtained from characteristic values as follows:

$$R_{v,d}=\frac{R_{v,k}\cdot k_{mod}}{\gamma_M}$$

$$R_{up,d}=\frac{R_{up,k}\cdot k_{mod}}{\gamma_M}$$

- In some cases the connection shear strength $R_{V,k}$-$R_{up,k}$ is notably large and may be higher than the secondary beam strength. Particular attention should be paid to the shear check of the reduced timber cross-section at the bracket location.

STRUCTURAL VALUES | F_{lat} | F_{ax}

TIMBER-TO-TIMBER

- Characteristic values comply with the EN 1995:2014 standard in accordance with ETA-09/0361.
- Design values can be obtained from characteristic values as follows:

$$R_{lat,d}=min\begin{cases}\dfrac{R_{lat,k\ alu}}{\gamma_{M2}}\\ \dfrac{R_{lat,k\ timber}\cdot k_{mod}}{\gamma_M}\end{cases}$$

$$R_{ax,d}=min\begin{cases}\dfrac{R_{ax,k\ alu}}{\gamma_{M2}}\\ \dfrac{R_{ax,k\ timber}\cdot k_{mod}}{\gamma_M}\end{cases}$$

with γ_{M2} partial coefficient of the aluminium.

STRUCTURAL VALUES | F_v

TIMBER-TO-CONCRETE

- Characteristic values comply with the EN 1995:2014 standard in accordance with ETA-09/0361. Strength values for concrete anchors are design values derived from laboratory data and in accordance with the respective European Technical Assessments.
- Design resistance values can be obtained from the tabulated values as follows:

$$R_{v,d}=min\begin{cases}\dfrac{R_{v,k}\cdot k_{mod}}{\gamma_M}\\ R_{v,d\ concrete}\end{cases}$$

- Because of the arrangement of the fasteners on concrete, special care should be taken during installation.

ALUMIDI

CONCEALED BRACKET WITH AND WITHOUT HOLES

FLOORS AND ROOFS
Suitable for medium-sized floors and roofs. It can also be used with inclined beams, thanks to the certified and calculated strengths in all directions.

NEW LONG VERSION
The 2200 mm long version is now also available with holes. The possibility of cutting every 40 mm allows brackets to be cut to the most suitable size.

TIMBER, CONCRETE AND STEEL
Optimal hole spacing for joints on timber (nails or screws), on reinforced concrete (chemical anchors) and on steel (bolts).

USA, Canada and more design values available online.

VIDEO

MY PROJECT SOFTWARE

DESIGN REGISTERED

CE ETA-09/0361

SERVICE CLASS SC1 SC2 SC3

MATERIAL

alu 6005A EN AW-6005A aluminium alloy

EXTERNAL LOADS

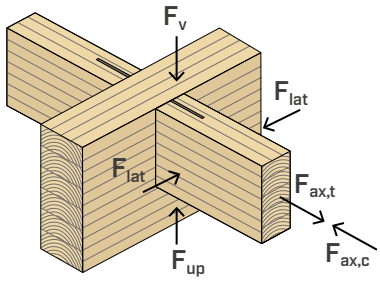

VIDEO
Scan the QR Code and watch the video on our YouTube channel

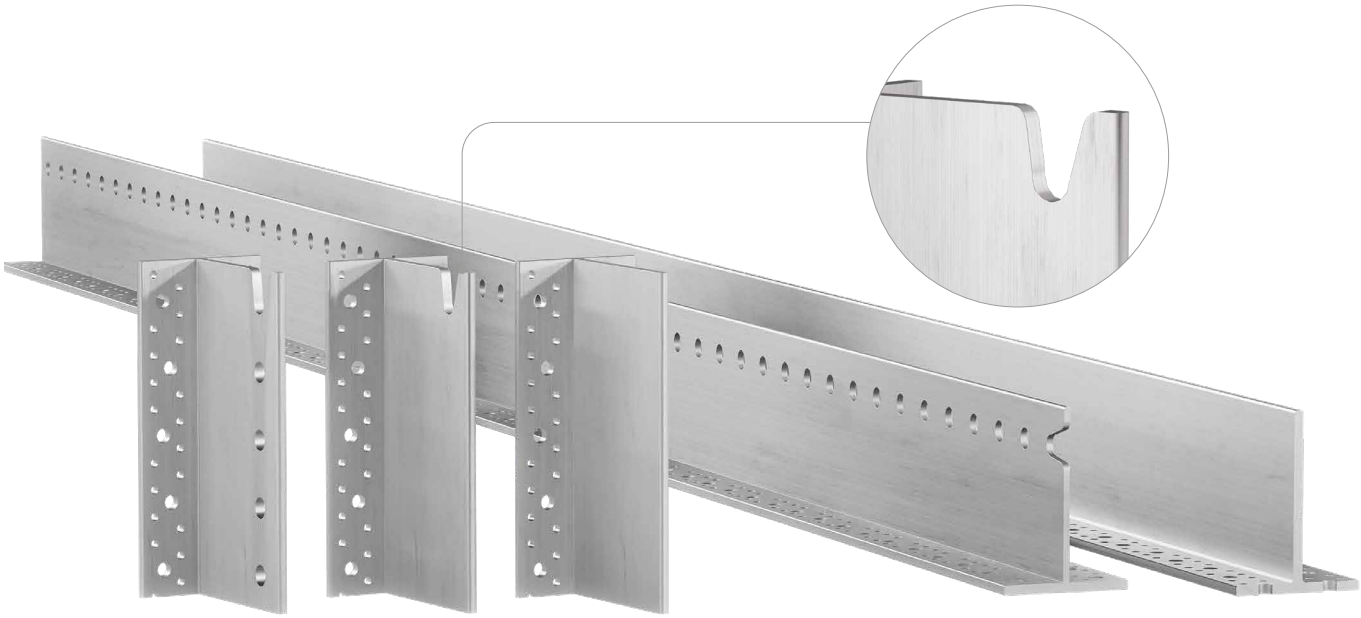



FIELDS OF USE

Concealed joint for beams in timber-to-timber or timber-to-concrete configuration, suitable for roofs, floors and medium-sized post-and-beam constructions. Use also outdoors in non aggressive environments.

Can be applied to:
- solid timber softwood and hardwood
- glulam, LVL



INVISIBLE

The concealed connection provides a satisfying appearance to the joint and fulfils the fire safety requirements. The notch where the first hole is located, facilitates the introduction of the secondary beam from the top.

UNEVEN SURFACES

For applications on concrete or other uneven surfaces the self-drilling dowels allow a greater installation tolerance when fastening the timber element.

CODES AND DIMENSIONS

ALUMIDI WITHOUT HOLES

CODE	type	H [mm]	*H [in]*	pcs
ALUMIDI80	without holes	80	*3 1/8*	25
ALUMIDI120	without holes	120	*4 3/4*	25
ALUMIDI160	without holes	160	*6 1/4*	25
ALUMIDI200	without holes	200	*8*	15
ALUMIDI240	without holes	240	*9 1/2*	15
ALUMIDI2200	without holes	2200	*86 5/8*	1

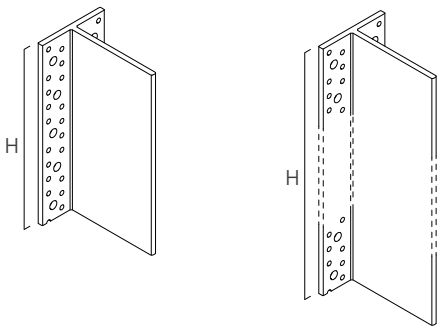

ALUMIDI WITHOUT HOLES WITH UPPER NOTCH

CODE	type	H [mm]	*H [in]*	pcs
ALUMIDI280N	without holes	280	*11*	15
ALUMIDI320N	without holes	320	*12 5/8*	8
ALUMIDI360N	without holes	360	*14 1/4*	8
ALUMIDI400N	without holes	400	*15 3/4*	8
ALUMIDI440N	without holes	440	*17 1/4*	8

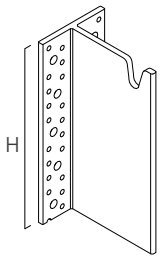

ALUMIDI WITH HOLES

CODE	type	H [mm]	*H [in]*	pcs
ALUMIDI120L	with holes	120	*4 3/4*	25
ALUMIDI160L	with holes	160	*6 1/4*	25
ALUMIDI200L	with holes	200	*8*	15
ALUMIDI240L	with holes	240	*9 1/2*	15
ALUMIDI280L	with holes	280	*11*	15
ALUMIDI320L	with holes	320	*12 5/8*	8
ALUMIDI360L	with holes	360	*14 1/4*	8
ALUMIDI2200L	with holes	2200	*86 5/8*	1

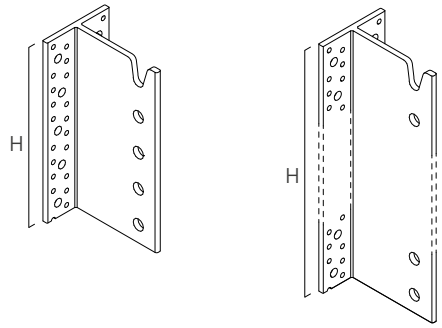

ADDITIONAL PRODUCTS - FASTENING

type	description		d [mm]	support	page
LBA	high bond nail		4		570
LBS	round head screw	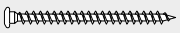	5		571
LBS EVO	C4 EVO round head screw	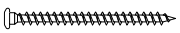	5		571
LBS HARDWOOD	round head screw on hardwoods		5		570
LBS HARDWOOD EVO	C4 EVO round head screw on hardwoods		5		572
SBD	self-drilling dowel		7,5		154
STA	smooth dowel		12		162
STA A2 | AISI 304	smooth dowel		12		162
VIN-FIX	vinyl ester chemical anchor	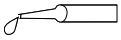	M8		545
EPO-FIX	epoxy chemical anchor	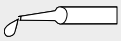	M8		557
INA	5.8 or 8.8 steel class threaded rod		M8		562
JIG ALU STA	drilling template for ALUMIDI and ALUMAXI	-	-		-

GEOMETRY

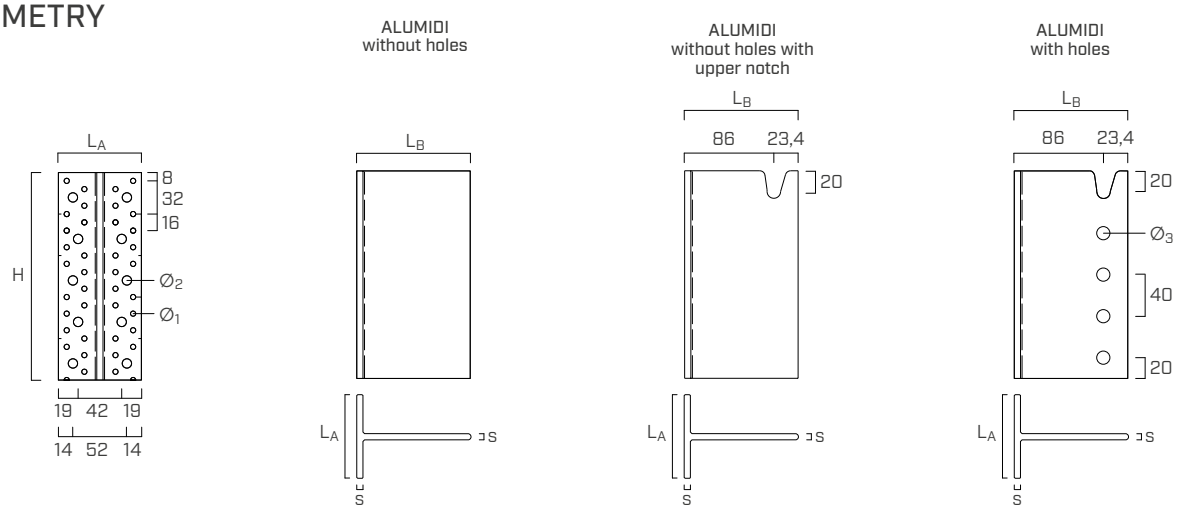

ALUMIDI			
thickness	**s**	[mm]	6
flange width	**L_A**	[mm]	80
web length	**L_B**	[mm]	109,4
small flange-holes	**$Ø_1$**	[mm]	5,0
large flange-holes	**$Ø_2$**	[mm]	9,0
blade holes (dowels)	**$Ø_3$**	[mm]	13,0

INSTALLATION

MINIMUM DISTANCES

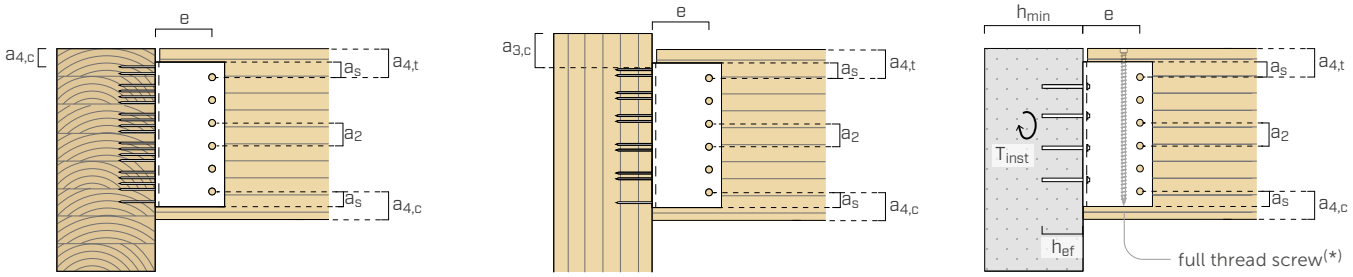

secondary beam-timber				self-drilling dowel SBD Ø7,5	smooth dowel STA Ø12
dowel-dowel	**a_2**	[mm]	≥ 3·d	≥ 23	≥ 36
dowel-top of beam	**$a_{4,t}$**	[mm]	≥ 4·d	≥ 30	≥ 48
dowel-bottom of beam	**$a_{4,c}$**	[mm]	≥ 3·d	≥ 23	≥ 36
dowel-bracket edge	**a_s**	[mm]	≥ 1,2·d_0(1)	≥ 10	≥ 16
dowel-main beam	**e**	[mm]	-	86	86

(1) Hole diameter.

main element-timber				nail LBA Ø4	screw LBS Ø5
first connector-top of beam	**$a_{4,c}$**	[mm]	≥ 5·d	≥ 20	≥ 25
first connector-column end	**$a_{3,c}$**	[mm]	≥ 10·d	≥ 40	≥ 50

Spacing and minimum distances refers to timber elements with density $\rho_k \leq 420$ kg/m^3, screws inserted without pre-drilling hole and for F_v stresses.

main element-concrete			chemical anchor VIN-FIX Ø8
minimum support thickness	**h_{min}**	[mm]	h_{ef} + 30 ≥ 100
concrete hole diameter	**d_0**	[mm]	10
tightening torque	**T_{inst}**	[Nm]	10

h_{ef} = effective anchoring depth in concrete.

(*) For timber-to-concrete configurations with smooth STA dowels, the addition of VGZ full thread screws in accordance with ETA-09/0361 prevents tensile cracking perpendicular to the grain.

STRUCTURAL VALUES | TIMBER-TO-TIMBER | F_v | F_{up}

TOTAL FASTENING

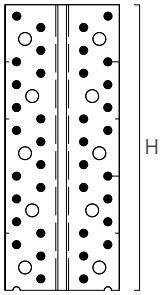

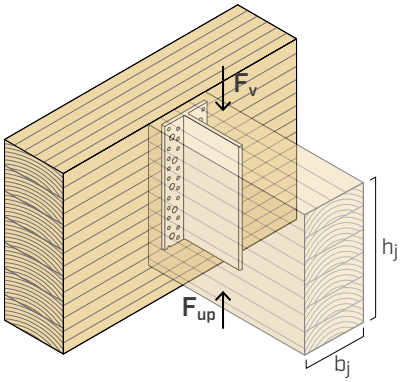

ALUMIDI with SBD self-drilling dowels

	SECONDARY BEAM		MAIN BEAM			
ALUMIDI		**dowels**	**fastening through nails**		**fastening through screws**	
H(1)	**b_j x h_j**	**SBD Ø7,5(2)**	**LBA Ø4 x 60**	**$R_{v,k}$ - $R_{up,k}$**	**LBS Ø5 x 60**	**$R_{v,k}$ - $R_{up,k}$**
[mm]	[mm]	[pcs Ø x L]	[pcs]	[kN]	[pcs]	[kN]
80	120 x 120	3 - Ø7,5 x 115	14	**9,1**	14	**12,4**
120	120 x 160	4 - Ø7,5 x 115	22	**18,2**	22	**24,6**
160	120 x 200	5 - Ø7,5 x 115	30	**29,0**	30	**36,6**
200	120 x 240	7 - Ø7,5 x 115	38	**42,0**	38	**54,8**
240	120 x 280	9 - Ø7,5 x 115	46	**56,3**	46	**70,5**
280	140 x 320	10 - Ø7,5 x 135	54	**72,5**	54	**87,0**
320	140 x 360	11 - Ø7,5 x 135	62	**84,9**	62	**105,1**
360	160 x 400	12 - Ø7,5 x 155	70	**105,1**	70	**124,7**
400	160 x 440	13 - Ø7,5 x 155	78	**118,1**	78	**139,2**
440	160 x 480	14 - Ø7,5 x 155	86	**128,7**	86	**151,0**

ALUMIDI with STA dowels

	SECONDARY BEAM		MAIN BEAM			
ALUMIDI		**dowels**	**fastening through nails**		**fastening through screws**	
H(1)	**b_j x h_j**	**STA Ø12(3)**	**LBA Ø4 x 60**	**$R_{v,k}$ - $R_{up,k}$**	**LBS Ø5 x 60**	**$R_{v,k}$ - $R_{up,k}$**
[mm]	[mm]	[pcs Ø x L]	[pcs]	[kN]	[pcs]	[kN]
120	120 x 160	3 - Ø12 x 120	22	**22,1**	22	**25,8**
160	120 x 200	4 - Ø12 x 120	30	**34,4**	30	**40,6**
200	120 x 240	5 - Ø12 x 120	38	**46,7**	38	**54,8**
240	120 x 280	6 - Ø12 x 120	46	**60,9**	46	**68,4**
280	140 x 320	7 - Ø12 x 140	54	**77,6**	54	**87,0**
320	140 x 360	8 - Ø12 x 140	62	**93,0**	62	**102,4**
360	160 x 400	9 - Ø12 x 160	70	**114,6**	70	**124,7**
400	160 x 440	10 - Ø12 x 160	78	**128,9**	78	**141,0**
440	160 x 480	11 - Ø12 x 160	86	**145,1**	86	**154,9**

NOTES

(1) The bracket with height H is available pre-drilled in the ALUMIDI versions without holes, ALUMIDI with holes and ALUMIDI with notch (codes on page 80) or can be obtained from the ALUMIDI2200 or ALUMIDI2200L rods.

(2) SBD self-drilling dowels Ø7,5: $M_{y,k}$ = 75000 Nmm.

(3) STA smooth dowels Ø12: $M_{y,k}$ = 69100 Nmm.

For the GENERAL PRINCIPLES of calculation, see page 87.

STRUCTURAL VALUES | TIMBER-TO-TIMBER | F_v | F_{up}

PARTIAL FASTENING[4]

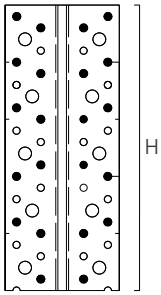

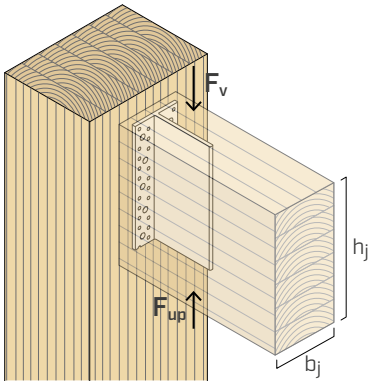

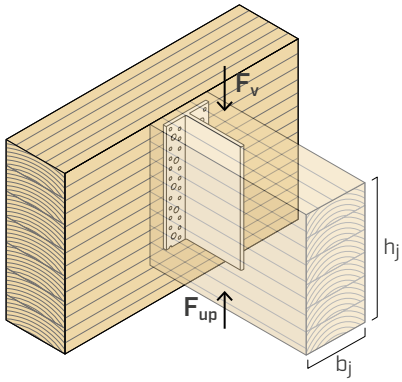

ALUMIDI with SBD self-drilling dowels

	SECONDARY BEAM		MAIN ELEMENT			
ALUMIDI		**dowels**	**fastening through nails**		**fastening through screws**	
H[1]	**b_j x h_j**	**SBD Ø7,5[2]**	**LBA Ø4 x 60**	**$R_{v,k}$ - $R_{up,k}$**	**LBS Ø5 x 60**	**$R_{v,k}$ - $R_{up,k}$**
[mm]	[mm]	[pcs Ø x L]	[pcs]	[kN]	[pcs]	[kN]
80	120 x 120	3 - Ø7,5 x 115	10	**7,5**	10	**10,1**
120	120 x 160	4 - Ø7,5 x 115	14	**16,6**	14	**18,1**
160	120 x 200	5 - Ø7,5 x 115	18	**24,1**	18	**25,2**
200	120 x 240	6 - Ø7,5 x 115	22	**31,0**	22	**35,2**
240	120 x 280	7 - Ø7,5 x 115	26	**38,8**	26	**45,2**
280	140 x 320	8 - Ø7,5 x 135	30	**49,8**	30	**54,8**
320	140 x 360	9 - Ø7,5 x 135	34	**60,9**	34	**64,8**
360	160 x 400	10 - Ø7,5 x 155	38	**73,2**	38	**75,2**
400	160 x 440	11 - Ø7,5 x 155	42	**80,0**	42	**84,4**
440	160 x 480	12 - Ø7,5 x 155	46	**88,8**	46	**95,3**

ALUMIDI with STA dowels

	SECONDARY BEAM		MAIN ELEMENT			
ALUMIDI		**dowels**	**fastening through nails**		**fastening through screws**	
H[1]	**b_j x h_j**	**STA Ø12[3]**	**LBA Ø4 x 60**	**$R_{v,k}$ - $R_{up,k}$**	**LBS Ø5 x 60**	**$R_{v,k}$ - $R_{up,k}$**
[mm]	[mm]	[pcs Ø x L]	[pcs]	[kN]	[pcs]	[kN]
120	120 x 160	3 - Ø12 x 120	14	**17,5**	14	**21,4**
160	120 x 200	4 - Ø12 x 120	18	**27,5**	18	**30,9**
200	120 x 240	5 - Ø12 x 120	22	**38,2**	22	**39,7**
240	120 x 280	6 - Ø12 x 120	26	**46,7**	26	**48,5**
280	140 x 320	7 - Ø12 x 140	30	**59,9**	30	**63,5**
320	140 x 360	8 - Ø12 x 140	34	**69,2**	34	**73,2**
360	160 x 400	9 - Ø12 x 160	38	**81,8**	38	**83,0**
400	160 x 440	10 - Ø12 x 160	42	**95,6**	42	**92,7**
440	160 x 480	11 - Ø12 x 160	46	**105,8**	46	**102,5**

NOTES

(1) The bracket with height H is available pre-drilled in the ALUMIDI versions without holes, ALUMIDI with holes and ALUMIDI with notch (codes on page 80) or can be obtained from the ALUMIDI2200 or ALUMIDI2200L rods.

(2) SBD self-drilling dowels Ø7,5: $M_{y,k}$ = 75000 Nmm.

(3) STA smooth dowels Ø12: $M_{y,k}$ = 69100 Nmm.

(4) Partial fastening is necessary for beam-to-column joints in order to observe minimum fastener spacings; it can be applied also for beam-to-beam joints. Partial fastening is achieved by fastening the connectors (nails or screws) alternately as shown in the image.

For the GENERAL PRINCIPLES of calculation, see page 87.

STRUCTURAL VALUES | TIMBER-TO-TIMBER | F_{lat} | F_{ax}

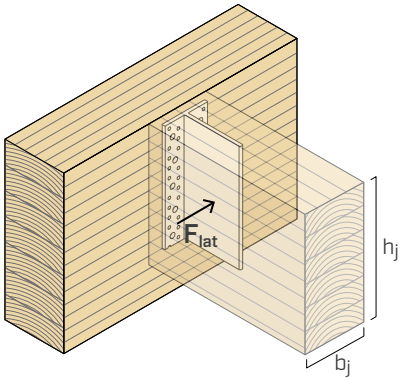

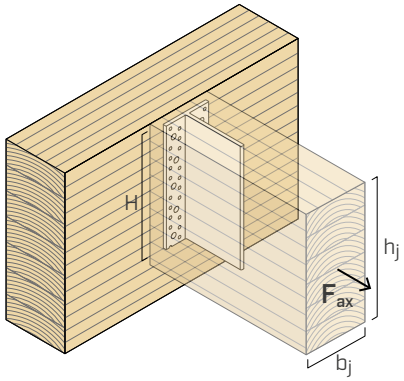

TIMBER-TO-TIMBER | F_{lat}

ALUMIDI with SBD self drilling dowels and STA dowels

	SECONDARY BEAM[1]	MAIN BEAM[2]		
ALUMIDI H	**b_j x h_j**	**LBA nails / LBS screws LBA Ø4 x 60 / LBS Ø5 x 60**	**$R_{lat,k\ timber}$ GL24h**	**$R_{lat,k\ alu}$**
[mm]	[mm]	[pcs]	[kN]	[kN]
80	120 x 120	≥ 10	**9,0**	**3,6**
120	120 x 160	≥ 14	**12,0**	**5,4**
160	120 x 200	≥ 18	**15,0**	**7,2**
200	120 x 240	≥ 22	**18,0**	**9,1**
240	120 x 280	≥ 26	**21,0**	**10,9**
280	140 x 320	≥ 30	**28,1**	**12,7**
320	140 x 360	≥ 34	**31,6**	**14,5**
360	160 x 400	≥ 38	**40,1**	**16,3**
400	160 x 440	≥ 42	**44,1**	**18,1**
440	160 x 480	≥ 46	**48,1**	**19,9**

TIMBER-TO-TIMBER | F_{ax}

ALUMIDI with SBD self-drilling dowels

	SECONDARY BEAM		MAIN BEAM				
ALUMIDI			**fastening through nails**		**fastening through screws**		
H	**b_j x h_j**	**SBD Ø7,5**	**LBA Ø4 x 60**	**$R_{ax,k\ timber}$**	**LBS Ø5 x 60**	**$R_{ax,k\ timber}$**	**$R_{ax,k\ alu}$**
[mm]	[mm]	[pcs Ø x L]	[pcs]	[kN]	[pcs]	[kN]	[kN]
80	120 x 120	3 - Ø7.5 x 115	14	**9,7**	14	**23,9**	**16,6**
120	120 x 160	4 - Ø7.5 x 115	22	**15,3**	22	**37,5**	**25,0**
160	120 x 200	5 - Ø7.5 x 115	30	**20,8**	30	**51,2**	**33,3**
200	120 x 240	7 - Ø7.5 x 115	38	**26,4**	38	**64,8**	**41,6**
240	120 x 280	9 - Ø7.5 x 115	46	**31,9**	46	**78,4**	**49,9**
280	140 x 320	10 - Ø7.5 x 135	54	**37,5**	54	**92,1**	**58,2**
320	140 x 360	11 - Ø7.5 x 135	62	**43,1**	62	**105,7**	**66,6**
360	160 x 400	12 - Ø7.5 x 155	70	**48,6**	70	**119,4**	**74,9**
400	160 x 440	13 - Ø7.5 x 155	78	**54,2**	78	**133,0**	**83,2**
440	160 x 480	14 - Ø7.5 x 155	86	**59,7**	86	**146,6**	**91,5**

NOTES

[1] The strength values are valid for both SBD Ø7,5 self-drilling dowels and STA Ø12 dowels.

[2] The strength values are valid for both LBA Ø4 nails and for LBS Ø5 screws.
For the GENERAL PRINCIPLES of calculation, see page 87.

STRUCTURAL VALUES | TIMBER-TO-CONCRETE | F_v

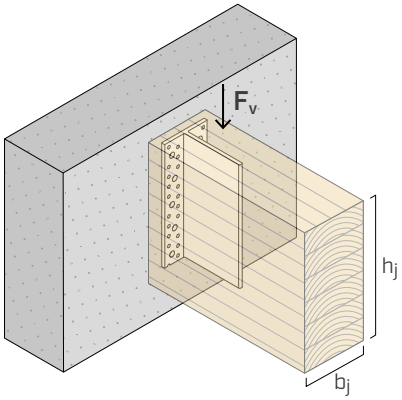

CHEMICAL ANCHOR

	SECONDARY BEAM TIMBER					MAIN BEAM UNCRACKED CONCRETE	
ALUMIDI		**SBD dowels(2)**		**STA dowels(3)**		**VIN-FIX anchor(4)**	
H(1) [mm]	**b_j x h_j** [mm]	**Ø7,5** [pcs Ø x L]	**$R_{v,k}$** [kN]	**Ø12** [pcs Ø x L]	**$R_{v,k}$** [kN]	**Ø8 x 110** [pcs]	**$R_{v,d\ concrete}$** [kN]
80	120 x 120	3 - Ø7,5 x 115	**29,2**	-	**-**	2	**9,1**
120	120 x 160	4 - Ø7,5 x 115	**39,0**	3 - Ø12 x 120	**35,5**	4	**15,7**
160	120 x 200	5 - Ø7,5 x 115	**48,7**	4 - Ø12 x 120	**47,3**	4	**22,7**
200	120 x 240	7 - Ø7,5 x 115	**68,2**	5 - Ø12 x 120	**59,1**	6	**31,4**
240	120 x 280	8 - Ø7,5 x 115	**87,7**	6 - Ø12 x 120	**70,9**	6	**38,5**
280	140 x 320	10 - Ø7,5 x 135	**103,4**	7 - Ø12 x 140	**91,0**	8	**49,7**
320	140 x 360	11 - Ø7,5 x 135	**113,8**	8 - Ø12 x 140	**104,0**	8	**57,1**
360	160 x 400	12 - Ø7,5 x 155	**133,1**	9 - Ø12 x 160	**128,4**	10	**69,4**
400	160 x 440	13 - Ø7,5 x 155	**144,2**	10 - Ø12 x 160	**142,7**	10	**77,3**
440	160 x 480	14 - Ø7,5 x 155	**155,3**	11 - Ø12 x 160	**157,0**	12	**89,3**

NOTES

(1) The bracket with height H is available pre-drilled in the ALUMIDI versions without holes, ALUMIDI with holes and ALUMIDI with notch (codes on page 80) or can be obtained from the ALUMIDI2200 or ALUMIDI2200L rods.

(2) SBD self-drilling dowels Ø7,5: $M_{y,k}$ = 75000 Nmm.

(3) STA smooth dowels Ø12: $M_{y,k}$ = 69100 Nmm.

(4) Chemical anchor VIN-FIX according to ETA-20/0363 with threaded rods (type INA) of minimum steel class 5.8 with h = 93 mm. Install the anchors two at a time, starting from the top, dowelling alternate rows.

For the GENERAL PRINCIPLES of calculation, see page 87.

TIMBER-TO-CONCRETE FASTENING PATTERNS

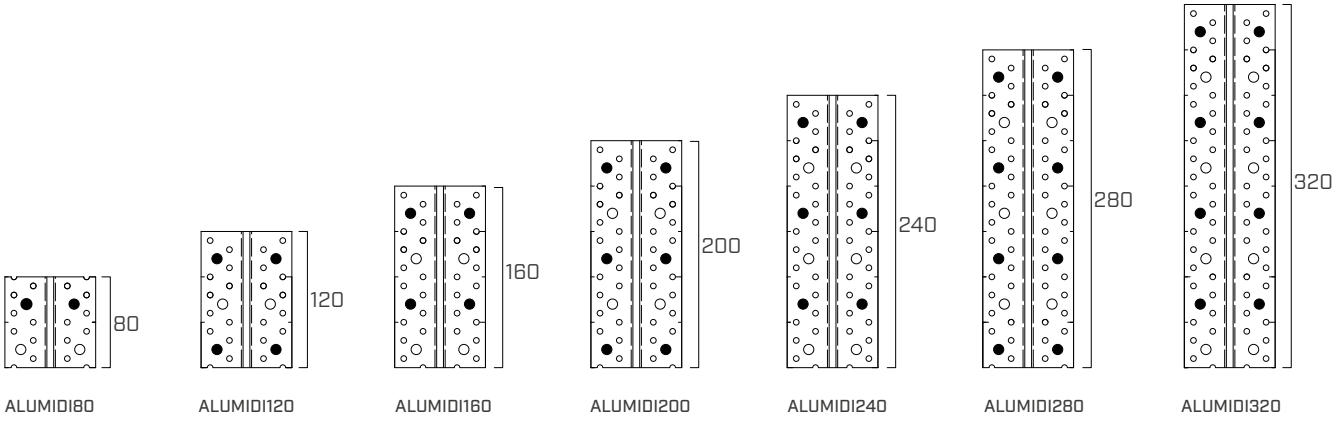

MOUNTING

VIDEO

1

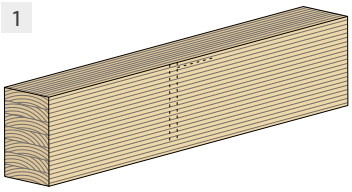

2

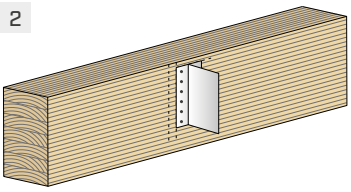

3

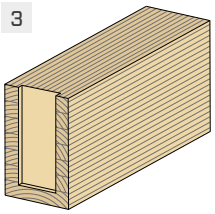

BOTTOM-UP INSTALLATION | ALUMIDI WITHOUT HOLES

4

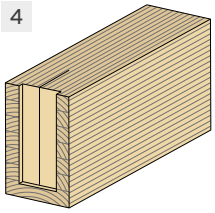

5

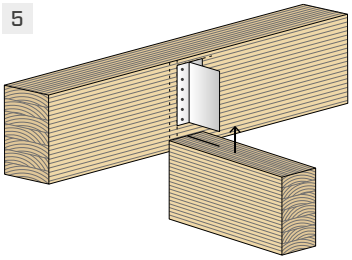

6

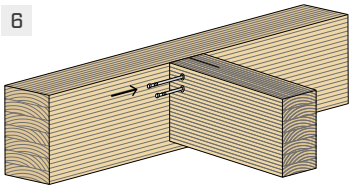

7

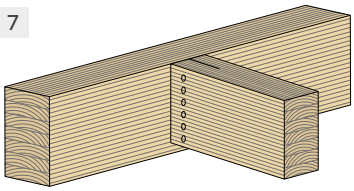

TOP-DOWN INSTALLATION | ALUMIDI WITHOUT HOLES WITH TOP NOTCH

4

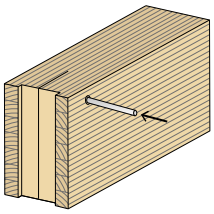

5

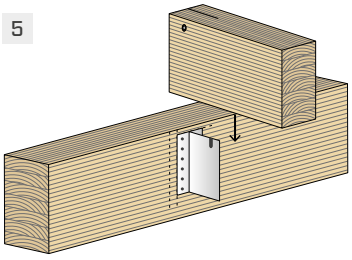

6

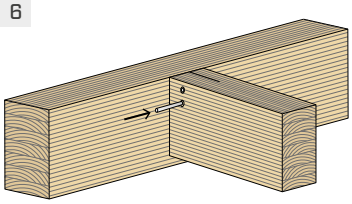

7

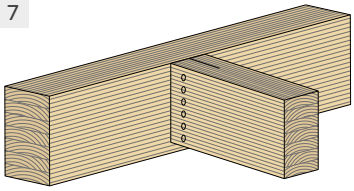

TOP-DOWN INSTALLATION | ALUMIDI WITH HOLES

4

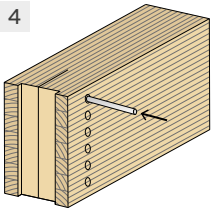

5

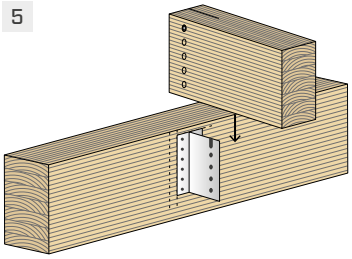

6

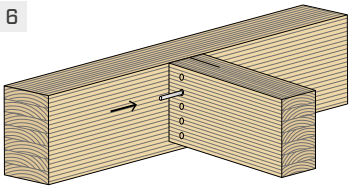

7

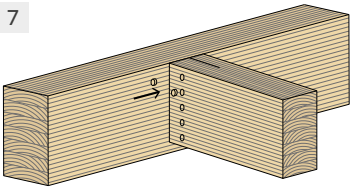

AXIAL INSTALLATION | ALUMIDI WITHOUT HOLES

4

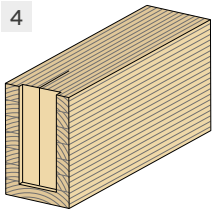

5

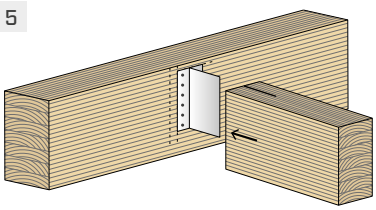

6

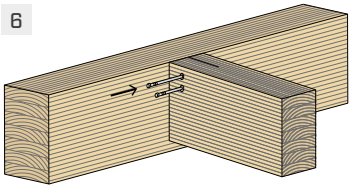

7

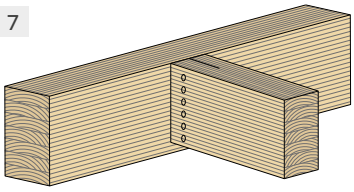

APPLICATION EXAMPLES

primary inclined beam

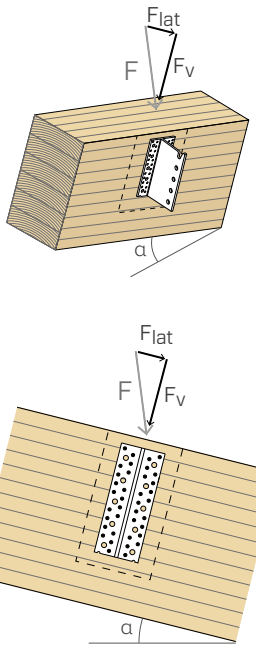

secondary inclined beam

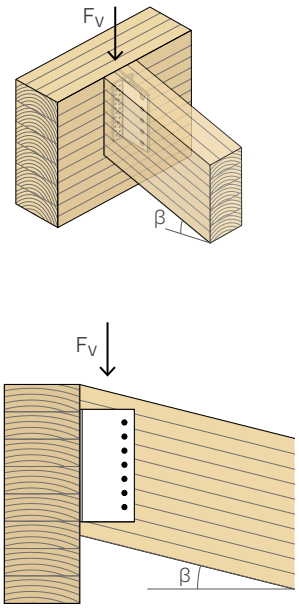

fastening on CLT wall

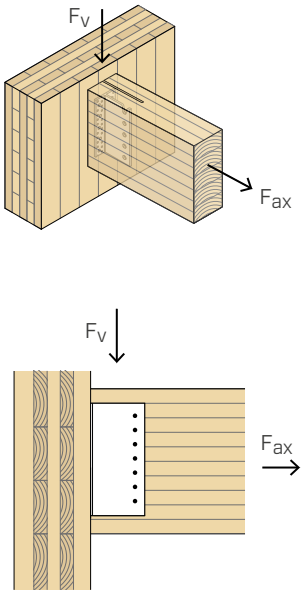

CLT wall-CLT floor joint

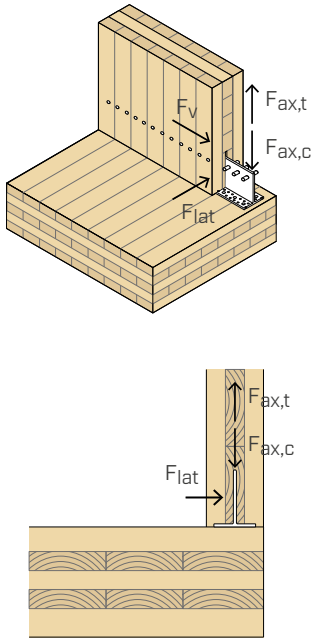

GENERAL PRINCIPLES

- Resistance values for the fastening system are valid for the calculation examples shown in the table. For different calculation methods, the MyProject software is available free of charge (www.rothoblaas.com).
- The calculation process used a timber characteristic density of ρ_k = 385 kg/m^3 and C25/30 concrete with a thin reinforcing layer, where edge-distance is not a limiting factor.
- The coefficients k_{mod} and γ_M should be taken according to the current regulations used for the calculation.
- Dimensioning and verification of timber and concrete elements must be carried out separately.
- The following verification shall be satisfied for combined loading:

$$\left(\frac{F_{v,d}}{R_{v,d}}\right)^2+\left(\frac{F_{lat,d}}{R_{lat,d}}\right)^2+\left(\frac{F_{ax,d}}{R_{ax,d}}\right)^2+\left(\frac{F_{up,d}}{R_{up,d}}\right)^2 \leq 1$$

  $F_{v,d}$ and $F_{up,d}$ are forces acting in opposite directions. Therefore only one of the forces Fv,d and Fup,d can act in combination with the forces $F_{ax,d}$ or $F_{lat,d}$.
- The values provided are calculated with a routing in the 8 mm thick timber.
- For configurations for which only the timber-side strength is reported, the aluminium-side overstrength can be assumed.

STRUCTURAL VALUES | Fv | F up

TIMBER-TO-TIMBER

- Characteristic values are consistent with EN 1995-1-1:2014, in accordance with ETA-09/0361 and ETA-22/0002, and evaluated with Rothoblaas experimental method.
- Design values can be obtained from characteristic values as follows:

$$R_{v,d}=\frac{R_{v,k}\cdot k_{mod}}{\gamma_M}$$

$$R_{up,d}=\frac{R_{up,k}\cdot k_{mod}}{\gamma_M}$$

- In some cases the connection shear strength $R_{V,k}$-$R_{up,k}$ is notably large and may be higher than the secondary beam strength. Particular attention should be paid to the shear check of the reduced timber cross-section at the bracket location.

STRUCTURAL VALUES | Flat | Fax

TIMBER-TO-TIMBER

- Characteristic values comply with the EN 1995-1-1:2014 standard in accordance with ETA-09/0361.
- Design values can be obtained from characteristic values as follows:

$$R_{lat,d}=min\begin{cases}\dfrac{R_{lat,k\ alu}}{\gamma_{M2}}\\ \dfrac{R_{lat,k\ timber}\cdot k_{mod}}{\gamma_M}\end{cases}$$

$$R_{ax,d}=min\begin{cases}\dfrac{R_{ax,k\ alu}}{\gamma_{M2}}\\ \dfrac{R_{ax,k\ timber}\cdot k_{mod}}{\gamma_M}\end{cases}$$

with γ_{M2} partial coefficient of the aluminium.

STRUCTURAL VALUES | F_v

TIMBER-TO-CONCRETE

- Characteristic values are consistent with EN 1995-1-1:2014 and in accordance with ETA-09/0361 and ETA-20/0363..
- Design resistance values can be obtained from the tabulated values as follows:

$$R_{v,d}=min\begin{cases}\dfrac{R_{v,k}\cdot k_{mod}}{\gamma_M}\\ R_{v,d\ concrete}\end{cases}$$

- The design values $R_{v,d\ concrete}$ are according to EN 1992:2018 with α_{sus} = 0,6.

INTELLECTUAL PROPERTY

- An ALUMIDI model is protected by the Registered Community Design RCD 008254353-0001.

ALUMAXI

CONCEALED BRACKET WITH AND WITHOUT HOLES

POST AND BEAM CONSTRUCTIONS

Standard connection designed for optimum strength for post and beam systems. By using SBD self-drilling dowels, a tolerance of up to 46 mm (± 23 mm) along the beam axis can be accommodated to fit installation tolerances.

NEW GEOMETRY

Optimised shape thanks to the new high-strength aluminium alloy EN AW-6082. Reduced weight and easier insertion of SBD self-drilling dowels.

FAST FASTENING

Certified strengths calculated in all directions: vertical, horizontal and axial. Certified fastening with LBS screws and SBD self-drilling dowels.

USA, Canada and more design values available online.

VIDEO

SOFTWARE

DESIGN REGISTERED

ETA-09/0361

SERVICE CLASS SC1 SC2 SC3

MATERIAL

alu 6082 EN AW-6082 aluminium alloy

EXTERNAL LOADS

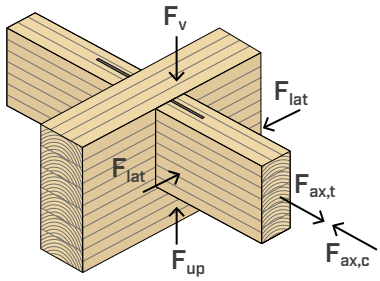

VIDEO

Scan the QR Code and watch the video on our YouTube channel

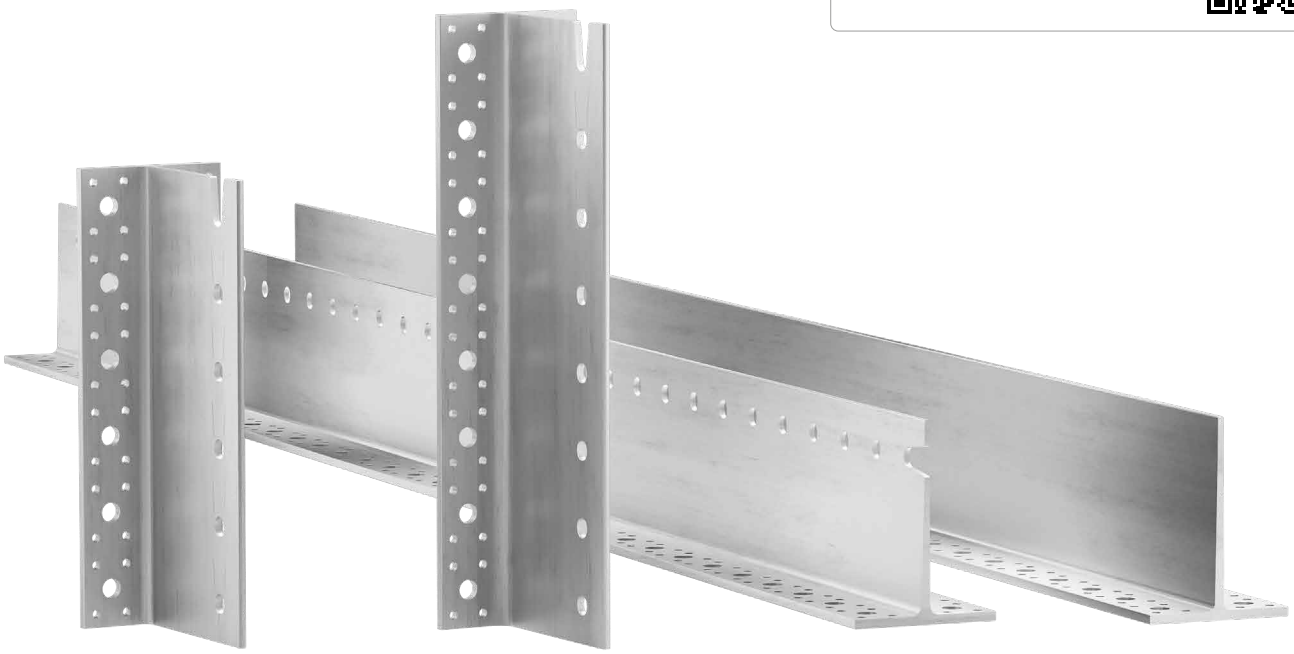



FIELDS OF USE

Concealed beam joints in timber-to-timber, timber-to-concrete or timber-to-steel configurations, suitable for large roofs, floors and post-and-beam constructions. Use also outdoors in non aggressive environments.

Can be applied to:

- glulam, softwood and hardwood
- LVL





FIRE RESISTANCE

The low weight of the steel - aluminium alloy facilitates easy transportation and on-site movements, while guaranteeing a very high strength. Being a concealed joint, it satisfies the fire safety requirements.

SIDE-BY-SIDE INSTALLATION

For high stresses or in the case of wide beams, two brackets can be placed side by side and fastened with long SBD dowels.

CODES AND DIMENSIONS

ALUMAXI WITH HOLES

CODE	type	H [mm]	*H* *[in]*	pcs
ALUMAXI384L	with holes	384	*15 1/8*	1
ALUMAXI512L	with holes	512	*20 3/16*	1
ALUMAXI640L	with holes	640	*25 3/16*	1
ALUMAXI768L	with holes	768	*30 1/4*	1
ALUMAXI2176L	with holes	2176	*85 11/16*	1

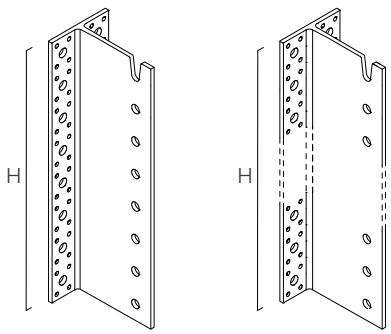

ALUMAXI WITHOUT HOLES

CODE	type	H [mm]	*H* *[in]*	pcs
ALUMAXI2176	without holes	2176	*85 11/16*	1

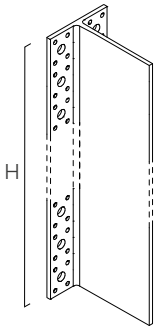

ENGINEERING OPTIMISATION

The new ALUMAXI bracket has been designed using a higher-performance aluminium alloy. This choice made it possible to reduce the thickness of the wing and core, and to optimise the shape of the wing by using a tapered profile. The mechanical characteristics are unchanged despite a 17% weight reduction.

new geometry

previous geometry

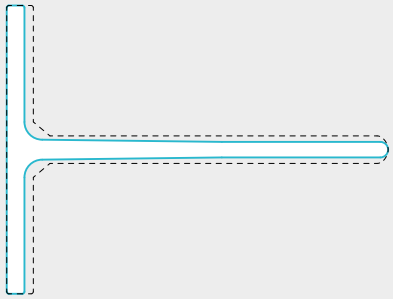

ADDITIONAL PRODUCTS - FASTENING

type	description		d [mm]	support	page
LBA	high bond nail		6		570
LBS	round head screw		7		571
LBS EVO	C4 EVO round head screw		7		571
LBS HARDWOOD EVO	C4 EVO round head screw on hardwoods		7		572
SBD	self-drilling dowel		7,5		154
STA	smooth dowel		16		162
STA A2 | AISI 304	smooth dowel	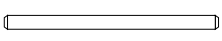	16		162
KOS	hexagonal head bolt	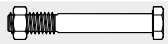	M16		168
VIN-FIX	vinyl ester chemical anchor		M16		545
EPO-FIX	epoxy chemical anchor		M16		557
INA	5.8 or 8.8 steel class threaded rod		M16		562
JIG ALU STA	drilling template for ALUMIDI and ALUMAXI	-	-		-

GEOMETRY

ALUMAXI			
flange thickness	s_1	[mm]	8
web thickness (base)	s_2	[mm]	9
web thickness (end)	s_3	[mm]	7
flange width	L_A	[mm]	130
web length	L_B	[mm]	172
small flange-holes	$Ø_1$	[mm]	7,5
large flange-holes	$Ø_2$	[mm]	17,0
blade holes (dowels)	$Ø_3$	[mm]	17,0

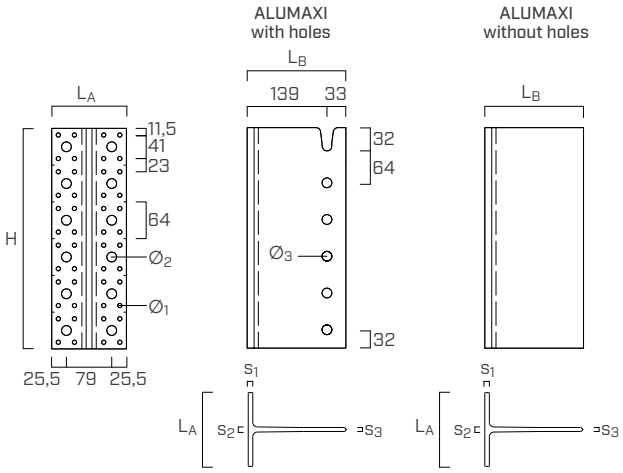

INSTALLATION

MINIMUM DISTANCES

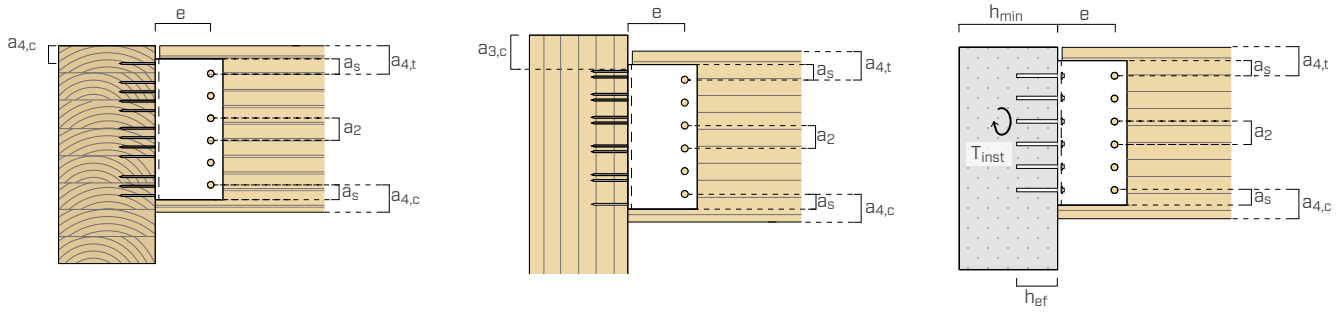

secondary beam-timber				self-drilling dowel SBD Ø7,5	smooth dowel STA Ø16
dowel-dowel	a_2	[mm]	≥ 3·d	≥ 23	≥ 48
dowel-top of beam	$a_{4,t}$	[mm]	≥ 4·d	≥ 30	≥ 64
dowel-bottom of beam	$a_{4,c}$	[mm]	≥ 3·d	≥ 23	≥ 48
dowel-bracket edge	a_s	[mm]	≥ 1,2·d_0 (1)	≥ 10	≥ 21
dowel-dowel	a_1 (2)	[mm]	≥ 3·d	≥ 23 | ≥ 38	-
dowel-main beam	e	[mm]	-	88 ÷ 139	139

(1) Hole diameter.
(2) Spacing between dowels parallel to the grain for load-to-grain angle α = 90° (F_V stress) and α = 0° (F_{ax} stress).

main element-timber				nail LBA Ø6	screw LBS Ø7
first connector-top of beam	$a_{4,c}$	[mm]	≥ 5·d	≥ 30	≥ 35
first connector-column end	$a_{3,c}$	[mm]	≥ 10·d	≥ 60	≥ 70

Minimum spacing and diameters refers to timber elements with density $\rho_k \leq 420$ kg/m^3 and screws inserted without pre-drilling hole.

main element-concrete			chemical anchor VIN-FIX Ø16
minimum support thickness	h_{min}	[mm]	h_{ef} + 30 ≥ 100
concrete hole diameter	d_0	[mm]	18
tightening torque	T_{inst}	[Nm]	80

h_{ef} = effective anchoring depth in concrete.

STRUCTURAL VALUES | TIMBER-TO-TIMBER | F_v | F_{up}

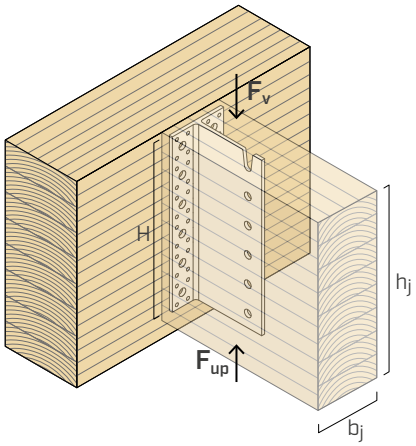

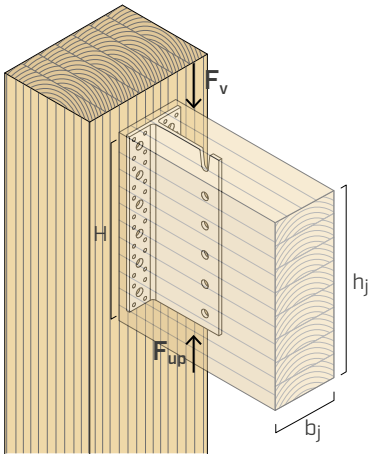

ALUMAXI with SBD self-drilling dowels

	SECONDARY BEAM		MAIN ELEMENT	
ALUMAXI **H**(1) [mm]	**b_j x h_j** [mm]	**dowels SBD Ø7,5**(2) [pcs Ø x L]	**LBA nails / LBS screws LBA Ø6 x 80 / LBS Ø7 x 80** [pcs]	**$R_{v,k}$ - $R_{up,k}$**(3) [kN]
384	160 x 432	12 - Ø7,5 x 155	48	**134,5**
448	160 x 496	14 - Ø7,5 x 155	56	**156,9**
512	160 x 560	16 - Ø7,5 x 155	64	**179,4**
576	160 x 624	18 - Ø7,5 x 155	72	**201,8**
640	200 x 688	20 - Ø7,5 x 195	80	**259,8**
704	200 x 752	22 - Ø7,5 x 195	88	**285,8**
768	200 x 816	24 - Ø7,5 x 195	96	**311,8**
832	200 x 880	26 - Ø7,5 x 195	104	**337,7**
896	200 x 944	28 - Ø7,5 x 195	112	**363,7**
960	200 x 1008	30 - Ø7,5 x 195	120	**389,7**

ALUMAXI with STA dowels

	SECONDARY BEAM		MAIN ELEMENT	
ALUMAXI **H**(1) [mm]	**b_j x h_j** [mm]	**dowels STA Ø16**(4) [pcs Ø x L]	**LBA nails / LBS screws LBA Ø6 x 80 / LBS Ø7 x 80** [pcs]	**$R_{v,k}$ - $R_{up,k}$**(3) [kN]
384	160 x 432	6 - STA Ø16 x 160	48	**131,1**
448	160 x 496	7 - STA Ø16 x 160	56	**153,0**
512	160 x 560	8 - STA Ø16 x 160	64	**174,8**
576	160 x 624	9 - STA Ø16 x 160	72	**196,7**
640	200 x 688	10 - STA Ø16 x 200	80	**247,6**
704	200 x 752	11 - STA Ø16 x 200	88	**272,4**
768	200 x 816	12 - STA Ø16 x 200	96	**297,1**
832	200 x 880	13 - STA Ø16 x 200	104	**321,9**
896	200 x 944	14 - STA Ø16 x 200	112	**346,6**
960	200 x 1008	15 - STA Ø16 x 200	120	**371,4**

NOTES

(1) The bracket with height H is available pre-cut in the ALUMAXI versions with holes (codes on page 90) or can be obtained from the rod ALUMAXI2176 or ALUMAXI2176L rod.

(2) SBD self-drilling dowels Ø7,5: $M_{y,k}$ = 75000 Nmm.

(3) The structural values in the table are valid for fastening on the main beam and column. The screws can be installed in the column without pre-drilled holes.

(4) STA smooth dowel Ø16: $M_{y,k}$ = 191000 Nmm.

For the GENERAL PRINCIPLES of calculation, see page 95.

STRUCTURAL VALUES | TIMBER-TO-TIMBER | F_{lat} | F_{ax}

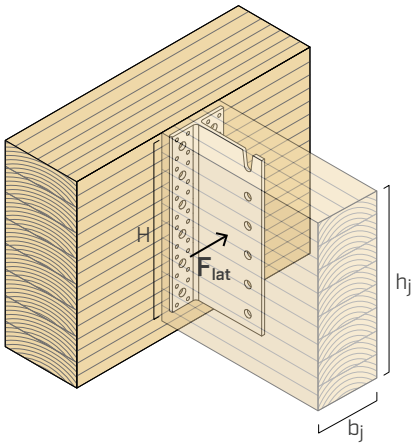

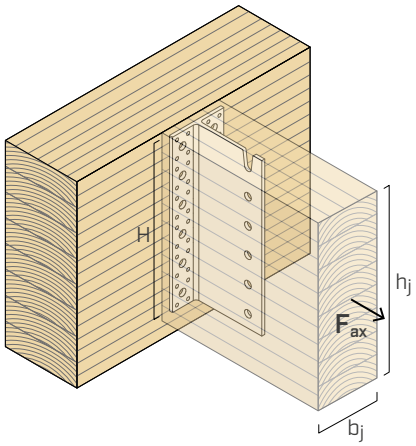

TIMBER-TO-TIMBER | F_{lat}

ALUMAXI with SBD self drilling dowels and STA dowels

	SECONDARY BEAM[1]	MAIN BEAM [2]		
ALUMAXI **H** [mm]	**b_j x h_j** [mm]	**LBA nails / LBS screws LBA Ø6 x 80 / LBS Ø7 x 80** [pcs]	**$R_{lat,k\ timber}$ GL24h** [kN]	**$R_{lat,k\ alu}$** [kN]
384	160 x 432	≥ 24	**34,3**	**31,2**
448	160 x 496	≥ 28	**39,4**	**36,4**
512	160 x 560	≥ 32	**44,4**	**41,6**
576	160 x 624	≥ 36	**49,5**	**46,8**
640	200 x 688	≥ 40	**69,1**	**52,0**
704	200 x 752	≥ 44	**75,6**	**57,2**
768	200 x 816	≥ 48	**82,0**	**62,4**
832	200 x 880	≥ 52	**88,4**	**67,6**
896	200 x 944	≥ 56	**94,9**	**72,8**
960	200 x 1008	≥ 60	**101,3**	**78,0**

TIMBER-TO-TIMBER | F_{ax}

ALUMAXI with STA dowels

	SECONDARY BEAM		MAIN BEAM				
ALUMAXI			**fastening through nails**		**fastening through screws**		
H [mm]	**b_j x h_j** [mm]	**STA Ø16** [pcs Ø x L]	**LBA Ø6 x 80** [pcs]	**$R_{ax,k\ timber}$ GL24h** [kN]	**LBS LBS Ø7 x 80** [pcs]	**$R_{ax,k\ timber}$ GL24h** [kN]	**$R_{ax,k\ alu}$** [kN]
384	160 x 432	6 - Ø16 x 160	48	**78,3**	48	**131,3**	**101,6**
448	160 x 496	7 - Ø16 x 160	56	**91,4**	56	**153,1**	**118,5**
512	160 x 560	8 - Ø16 x 160	64	**104,4**	64	**175,0**	**135,4**
576	160 x 624	9 - Ø16 x 160	72	**117,5**	72	**196,9**	**152,4**
640	200 x 688	10 - Ø16 x 200	80	**130,5**	80	**218,8**	**169,3**
704	200 x 752	11 - Ø16 x 200	88	**143,6**	88	**240,7**	**186,2**
768	200 x 816	12 - Ø16 x 200	96	**156,6**	96	**262,5**	**203,2**
832	200 x 880	13 - Ø16 x 200	104	**169,7**	104	**284,4**	**220,1**
896	200 x 944	14 - Ø16 x 200	112	**182,7**	112	**306,3**	**237,0**
960	200 x 1008	15 - Ø16 x 200	120	**195,8**	120	**328,2**	**254,0**

NOTES

(1) The strength values are valid for both STA Ø16 dowels and for SBD Ø7,5 self-drilling dowels.

(2) The strength values are valid for both LBA Ø6 nails and for LBS Ø7 screws.

For the GENERAL PRINCIPLES of calculation, see page 95.

STRUCTURAL VALUES | TIMBER-TO-CONCRETE | F_v

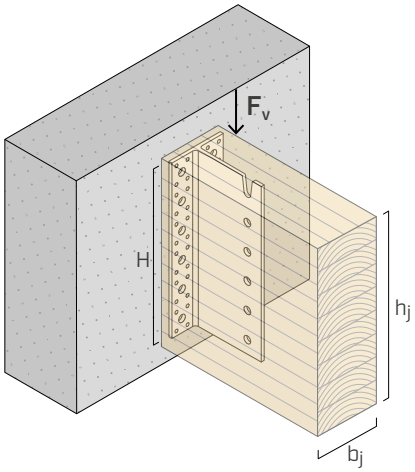

CHEMICAL ANCHOR

ALUMAXI with SBD self drilling dowels and STA dowels

	SECONDARY BEAM TIMBER					MAIN BEAM UNCRACKED CONCRETE	
ALUMAXI		**SBD dowels(2)**		**STA dowels(3)**		**VIN-FIX anchor(4)**	
H(1) [mm]	**b_j x h_j** [mm]	**Ø7,5** [pcs Ø x L]	**$R_{v,k}$** [kN]	**Ø16** [pcs Ø x L]	**$R_{v,k}$** [kN]	**Ø16 x 160** [pcs]	**$R_{v,d\ concrete}$** [kN]
384	160 x 432	12 - Ø7,5 x 155	**134,5**	6 - Ø16 x 160	**131,1**	6	**86,2**
448	160 x 496	14 - Ø7,5 x 155	**156,9**	7 - Ø16 x 160	**153,0**	8	**110,0**
512	160 x 560	16 - Ø7,5 x 155	**179,4**	8 - Ø16 x 160	**174,8**	8	**124,3**
576	160 x 624	18 - Ø7,5 x 155	**201,8**	9 - Ø16 x 160	**196,7**	10	**147,3**
640	200 x 688	20 - Ø7,5 x 195	**259,8**	10 - Ø16 x 200	**247,6**	10	**161,8**
704	200 x 752	22 - Ø7,5 x 195	**285,8**	11 - Ø16 x 200	**272,4**	12	**189,1**
768	200 x 816	24 - Ø7,5 x 195	**311,8**	12 - Ø16 x 200	**297,1**	12	**197,9**
832	200 x 880	26 - Ø7,5 x 195	**337,7**	13 - Ø16 x 200	**321,9**	14	**226,2**
896	200 x 944	28 - Ø7,5 x 195	**363,7**	14 - Ø16 x 200	**346,6**	14	**240,1**
960	200 x 1008	30 - Ø7,5 x 195	**389,7**	15 - Ø16 x 200	**371,4**	16	**259,8**

NOTES

(1) The bracket with height H is available pre-cut in the ALUMAXI versions with holes (codes on page 90) or can be obtained from the rod ALUMAXI2176 or ALUMAXI2176L rod.

(2) SBD self-drilling dowels Ø7,5: $M_{y,k}$ = 75000 Nmm.

(3) STA smooth dowel Ø16: $M_{y,k}$ = 191000 Nmm.

(4) Chemical anchor VIN-FIX according to ETA-20/0363 with threaded rods (type INA) of minimum steel class 5.8 with h_{ef} = 128 mm. Install the anchors two at a time, starting from the top, dowelling alternate rows.

For the GENERAL PRINCIPLES of calculation, see page 95.

GENERAL PRINCIPLES

- Resistance values for the fastening system are valid for the calculation examples shown in the table. For different calculation methods, the MyProject software is available free of charge (www.rothoblaas.com).
- The calculation process used a timber characteristic density of ρ_k = 385 kg/m^3 and C25/30 concrete with a thin reinforcing layer, where edge-distance is not a limiting factor.
- The coefficients k_{mod} and γ_M should be taken according to the current regulations used for the calculation.
- Dimensioning and verification of timber and concrete elements must be carried out separately.
- The following verification shall be satisfied for combined loading:

$$\left(\frac{F_{v,d}}{R_{v,d}}\right)^2 + \left(\frac{F_{lat,d}}{R_{lat,d}}\right)^2 + \left(\frac{F_{ax,d}}{R_{ax,d}}\right)^2 + \left(\frac{F_{up,d}}{R_{up,d}}\right)^2 \leq 1$$

  $F_{v,d}$ and $F_{up,d}$ are forces acting in opposite directions. Therefore only one of the forces $F_{v,d}$ and $F_{up,d}$ can act in combination with the forces $F_{ax,d}$ or $F_{lat,d}$.
- The values provided are calculated with a routing in the 10 mm thick timber.
- For configurations for which only the timber-side strength is reported, the aluminium-side overstrength can be assumed.

STRUCTURAL VALUES | F_v | F_{up}

TIMBER-TO-TIMBER

- Characteristic values comply with the EN 1995-1-1:2014 standard in accordance with ETA-09/0361.
- Design values can be obtained from characteristic values as follows:

$$R_{v,d} = \frac{R_{v,k} \cdot k_{mod}}{\gamma_M}$$

$$R_{up,d} = \frac{R_{up,k} \cdot k_{mod}}{\gamma_M}$$

- Shear strengths on columns are calculated considering the effective number of connectors according to ETA-09/0361.
- In some cases the connection shear strength $R_{V,k}$-$R_{up,k}$ is notably large and may be higher than the secondary beam strength. Particular attention should be paid to the shear check of the reduced timber cross-section at the bracket location.

STRUCTURAL VALUES | F_{lat} | F_{ax}

TIMBER-TO-TIMBER

- Characteristic values comply with the EN 1995-1-1:2014 standard in accordance with ETA-09/0361.
- Design values can be obtained from characteristic values as follows:

$$R_{lat,d} = min \begin{cases} \dfrac{R_{lat,k\ alu}}{\gamma_{M2}} \\ \dfrac{R_{lat,k\ timber} \cdot k_{mod}}{\gamma_M} \end{cases}$$

$$R_{ax,d} = min \begin{cases} \dfrac{R_{ax,k\ alu}}{\gamma_{M2}} \\ \dfrac{R_{ax,k\ timber} \cdot k_{mod}}{\gamma_M} \end{cases}$$

with γ_{M2} partial coefficient of the aluminium.

STRUCTURAL VALUES | F_v

TIMBER-TO-CONCRETE

- Characteristic values are consistent with EN 1995-1-1:2014 and in accordance with ETA-09/0361 and ETA-20/0363..
- Design resistance values can be obtained from the tabulated values as follows:

$$R_{v,d} = min \begin{cases} \dfrac{R_{v,k} \cdot k_{mod}}{\gamma_M} \\ R_{v,d\ concrete} \end{cases}$$

- The design values $R_{v,d\ concrete}$ are according to EN 1992:2018 with α_{sus} = 0,6.

INTELLECTUAL PROPERTY

- An ALUMAXI model is protected by the Registered Community Design RCD 015032190-0001.

MY PROJECT
calculation software

Discover how to design simply, quickly and intuitively!

MyProject is the practical and reliable software created for professionals who design timber structures: it allows for the design of a broad range or connections, carry out thermo-hygrometric analysis of opaque components and designing the most appropriate acoustic solution. The program provides detailed instructions and explanatory illustrations for the products installation.

Simplify your work, **generate complete calculation reports** thanks to MyProject.

Download it now and start designing!

rothoblaas.com



ALUMEGA

PINNED CONNECTION FOR POST AND BEAM

VIDEO

CALCULATION TOOL

DESIGN REGISTERED

ETA-23/0824

SERVICE CLASS SC1 SC2 SC3

MATERIAL

alu 6082 EN AW-6082 aluminium alloy

EXTERNAL LOADS

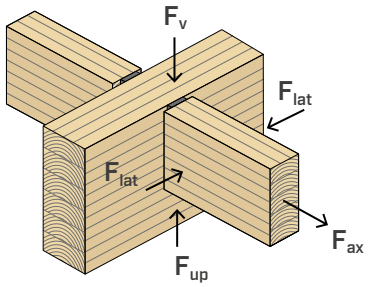

POST AND BEAM CONSTRUCTIONS

It standardizes the beam-to-beam and beam-to-column connections for post-and-beam systems, even with large spans. Modular components and various fastening possibilities solve all types of connections on timber, concrete or steel.

TOLERANCE AND ASSEMBLY

Axial tolerance up to 8 mm (±4 mm) to accommodate installation inaccuracies. The upper notch allows using a bolt as a positioning aid. The connection can be pre-assembled in the factory and completed on site with bolts.

ROTATIONAL COMPATIBILITY

Slotted holes allow rotation of the connector and ensure hinged structural behaviour. The rotation of the connector is compatible with the inter-story drift caused by earthquake and wind actions, reducing momentum transfer and structural damage.

USA, Canada and more design values available online.

VIDEO
Scan the QR Code and watch the video on our YouTube channel


HP


HV


JV


JS



FIELDS OF USE

Concealed joint for beam in timber-to-timber, timber-to-concrete or timber-to-steel configuration, suitable for floors and post and beam constructions, even with large spans. Use also outdoors in non aggressive environments.

Can be applied to:

- glulam, softwood and hardwood
- LVL





FIRE

The multiple installation methods allow for concealed installation and fire protection at all times, possibly by inserting FIRE STRIPE GRAPHITE to seal the joist-header interface.

HYBRID STRUCTURES

The HP version can be fixed on timber, concrete or steel. Ideal for hybrid timber-to-concrete or timber-to-steel structures.

CODES AND DIMENSIONS

HP - main element connector (**H**EADER) for timber (HBS**P** screws), concrete and steel

CODE	B x H x P [mm]	*B x H x P [in]*	pcs
ALUMEGA240HP	95 x 240 x 50	*3 3/4 x 9 1/2 x 1 15/16*	1
ALUMEGA360HP	95 x 360 x 50	*3 3/4 x 14 1/4 x 1 15/16*	1
ALUMEGA480HP	95 x 480 x 50	*3 3/4 x 19 x 1 15/16*	1
ALUMEGA600HP	95 x 600 x 50	*3 3/4 x 23 5/8 x 1 15/16*	1
ALUMEGA720HP	95 x 720 x 50	*3 3/4 x 28 3/8 x 1 15/16*	1
ALUMEGA840HP	95 x 840 x 50	*3 3/4 x 33 1/16 x 1 15/16*	1

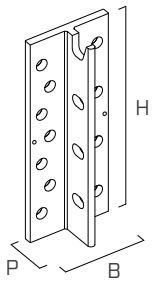

HV - main element connector (**H**EADER) for timber with inclined **V**GS screws

CODE	B x H x P [mm]	*B x H x P [in]*	pcs
ALUMEGA240HV	95 x 240 x 50	*3 3/4 x 9 1/2 x 1 15/16*	1
ALUMEGA360HV	95 x 360 x 50	*3 3/4 x 14 1/4 x 1 15/16*	1
ALUMEGA480HV	95 x 480 x 50	*3 3/4 x 19 x 1 15/16*	1
ALUMEGA600HV	95 x 600 x 50	*3 3/4 x 23 5/8 x 1 15/16*	1
ALUMEGA720HV	95 x 720 x 50	*3 3/4 x 28 3/8 x 1 15/16*	1
ALUMEGA840HV	95 x 840 x 50	*3 3/4 x 33 1/16 x 1 15/16*	1

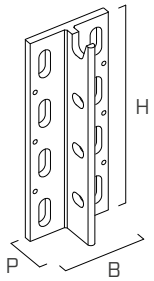

JV - beam connector (**J**OIST) with inclined **V**GS screws

CODE	B x H x P [mm]	*B x H x P [in]*	pcs
ALUMEGA240JV	95 x 240 x 49	*3 3/4 x 9 1/2 x 1 15/16*	1
ALUMEGA360JV	95 x 360 x 49	*3 3/4 x 14 1/4 x 1 15/16*	1
ALUMEGA480JV	95 x 480 x 49	*3 3/4 x 19 x 1 15/16*	1
ALUMEGA600JV	95 x 600 x 49	*3 3/4 x 23 5/8 x 1 15/16*	1
ALUMEGA720JV	95 x 720 x 49	*3 3/4 x 28 3/8 x 1 15/16*	1
ALUMEGA840JV	95 x 840 x 49	*3 3/4 x 33 1/16 x 1 15/16*	1

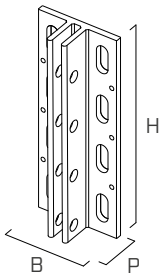

JS - beam connector (**J**OIST) with **S**TA/**S**BD dowels

CODE	B x H x P [mm]	*B x H x P [in]*	pcs
ALUMEGA240JS	68 x 240 x 49	*3 3/4 x 9 1/2 x 1 15/16*	1
ALUMEGA360JS	68 x 360 x 49	*3 3/4 x 14 1/4 x 1 15/16*	1
ALUMEGA480JS	68 x 480 x 49	*3 3/4 x 19 x 1 15/16*	1
ALUMEGA600JS	68 x 600 x 49	*2 11/16 x 23 5/8 x 1 15/16*	1
ALUMEGA720JS	68 x 720 x 49	*2 11/16 x 28 3/8 x 1 15/16*	1
ALUMEGA840JS	68 x 840 x 49	*2 11/16 x 33 1/16 x 1 15/16*	1

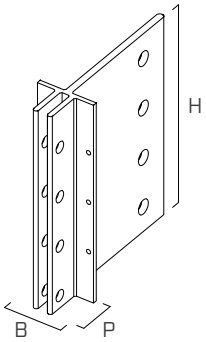

The connectors can be cut in multiples of 60 mm, respecting the minimum height of 240 mm.
For example, it is possible to obtain two ALUMEGA JV connectors with H = 300 mm from the ALUMEGA600JV connector.

CONNECTION BETWEEN CONNECTORS

Make sure that the **JV** and **JS** connectors are correctly installed to the secondary beam, referring to the "**TOP**" marking on the product.

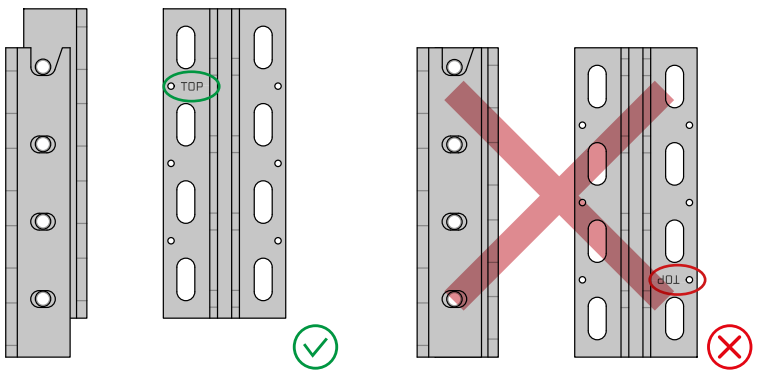

ADDITIONAL PRODUCTS - FASTENING

MEGABOLT - cylindrical head bolt with hexagon socket

CODE	material	d_1 [mm]	L [mm]	*d_1 [in]*	*L [in]*	pcs
MEGABOLT12030	steel class 8.8 zinc plated ISO 4762	M12	30	*0.48*	*1 3/16*	100
MEGABOLT12150		M12	150	*0.48*	*6*	50
MEGABOLT12270		M12	270	*0.48*	*10 5/8*	25

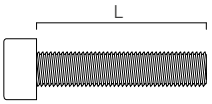

HEX WRENCH 10 mm

CODE	d_1 [mm]	L [mm]	*L [in]*	pcs
HEX10L234	10	234	*9 3/16*	1

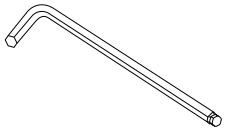

ALUMEGA JIG - set of jigs for installing ALUMEGA connectors side by side

CODE	distance between ALUMEGA HP, HV and JV side by side [mm]	*[in]*	distance between ALUMEGA JS side by side [mm]	*[in]*	L [mm]	pcs
JIGALUMEGA10	10	*3/8*	37	*1 7/16*	82 (1J) - 97 (1H)	6 + 6
JIGALUMEGA22	22	*7/8*	49	*1 15/16*	94 (2J) - 109 (2H)	6 + 6

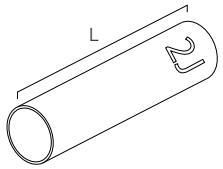

product	description		d [mm]	support [mm]	reference connector	pag.
HBS PLATE **HBS PLATE EVO**	pan head screw	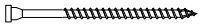	10		ALUMEGA HP	573
KOS	hexagonal head bolt		12		ALUMEGA HP	168
VGS **VGS EVO**	fully threaded countersunk screw	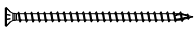	9		ALUMEGA HV ALUMEGA JV	575
VGU	45° washer for VGS		VGS Ø9		ALUMEGA HV ALUMEGA JV	569
JIG VGU	JIG VGU template		VGS Ø9		ALUMEGA HV ALUMEGA JV	569
STA **STA A2 | AISI304**	smooth dowel	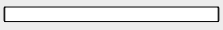	16		ALUMEGA JS	162
SBD	self-drilling dowel		7,5		ALUMEGA JS	154
LBS HARDWOOD EVO	C4 EVO round head screw on hardwoods		5		ALUMEGA HP ALUMEGA HV ALUMEGA JV ALUMEGA JS	572
INA	the threaded rod for chemical anchors		12		ALUMEGA HP	562
VIN-FIX	vinyl ester chemical anchor		-		ALUMEGA HP	545
ULS 440	washer		12		ALUMEGA HP	176

RELATED PRODUCTS



TAPS



FIRE STRIPE GRAPHITE



FIRE SEALING SILICONE



MS SEAL



FIRE SEALING ACRYLIC

GEOMETRY

HP - main element connector (**H**EADER) for timber (HBS**P** screws), concrete and steel

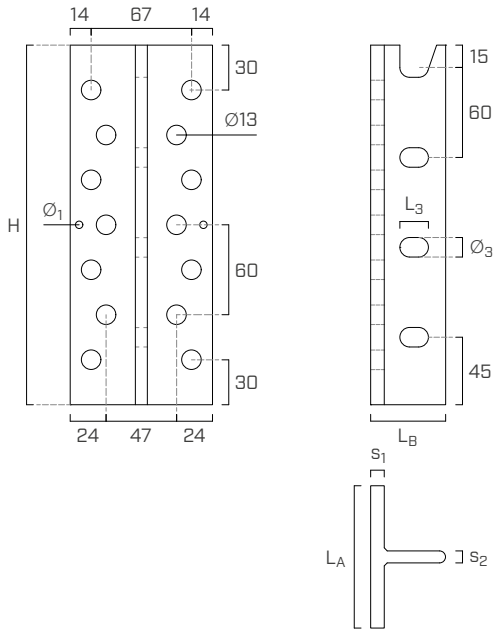

HV - main element connector (**H**EADER) for timber with inclined **V**GS screws

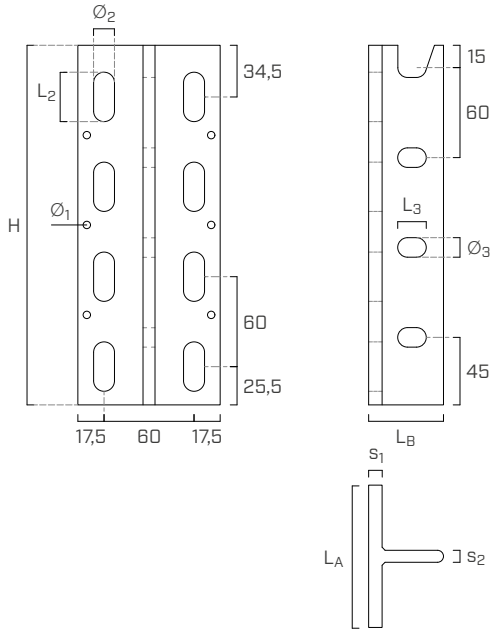

JV - beam connector (**J**OIST) with inclined **V**GS screws

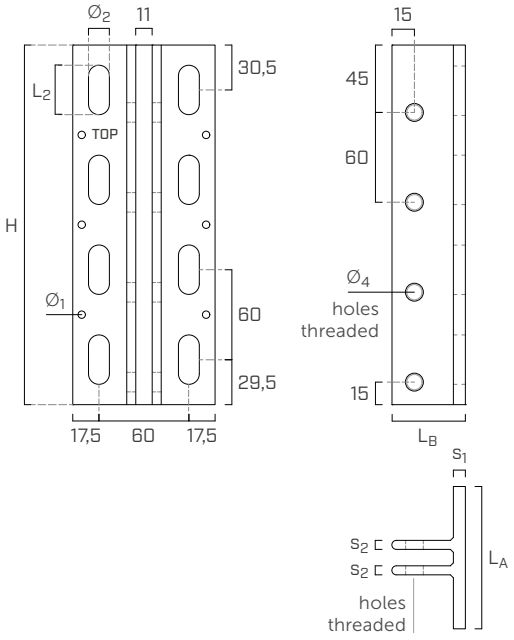

JS - beam connector (**J**OIST) with **S**TA/**S**BD dowels

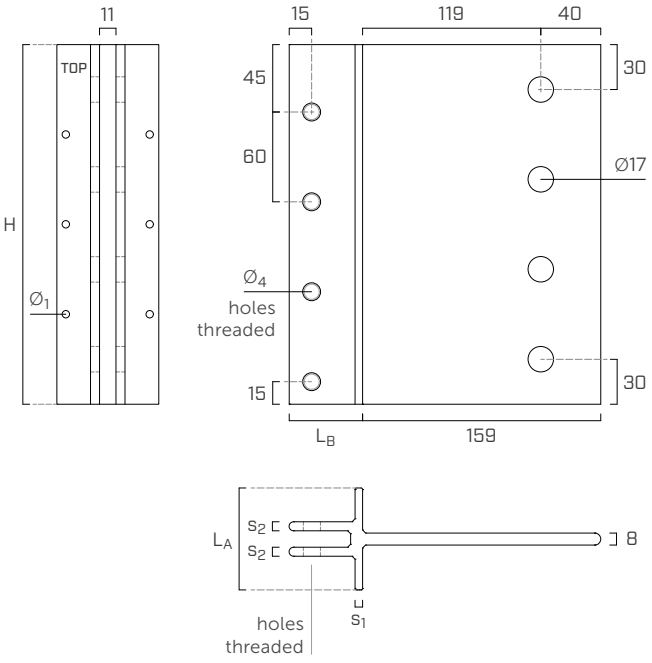

			HP	HV	JV	JS
flange thickness	s_1	[mm]	9	9	8	5
web thickness	s_2	[mm]	8	8	6	6
flange length	L_A	[mm]	95	95	95	68
web length	L_B	[mm]	50	50	49	49
small flange-holes	$Ø_1$	[mm]	5	5	5	5
flange slotted holes	$Ø_2$ x L_2	[mm]	-	Ø14 x 33	Ø14 x 33	-
web slotted holes	$Ø_3$ x L_3	[mm]	Ø13 x 20	Ø13 x 20	-	-
web threaded holes	$Ø_4$	[mm]	-	-	M12	M12

FASTENING OPTIONS

Two main beam connector types (HP and HV) and two secondary beam connector types (JV and JS) are available. Fastening options offer design freedom in terms of structural element cross-sections and strengths.

HP - main element connector (**H**EADER) for timber (HBS**P** screws), concrete and steel

CODE	HBS PLATE Ø10 [pcs]	partial fastening[1] KOS Ø12 [pcs]	VIN-FIX anchor Ø12 x 245 [pcs]	bolt Ø12 [pcs]
ALUMEGA240HP	14	8	6	6
ALUMEGA360HP	22	12	8	8
ALUMEGA480HP	30	16	12	10
ALUMEGA600HP	38	20	16	12
ALUMEGA720HP	46	24	18	14
ALUMEGA840HP	54	28	20	16

[1] Use the two outer rows of holes.

HV - main element connector (**H**EADER) for timber with inclined **V**GS screws

CODE	total fastening VGS Ø9 + VGU945 [n_{screw} + n_{washer}]	partial fastening[2] VGS Ø9 + VGU945 [n_{screw} + n_{washer}]	LBS HARDWOOD EVO Ø5 x 100 | 120[3] [pcs]
ALUMEGA240HV	8 + 8	6 + 6	6
ALUMEGA360HV	12 + 12	10 + 10	10
ALUMEGA480HV	16 + 16	14 + 14	14
ALUMEGA600HV	20 + 20	18 + 18	18
ALUMEGA720HV	24 + 24	22 + 22	22
ALUMEGA840HV	28 + 28	26 + 26	26

[2] Do not use the first row of holes.
[3] The use of LBS HARDWOOD EVO screws is mandatory.

JV - beam connector (**J**OIST) with inclined **V**GS screws

CODE	total fastening VGS Ø9 + VGU945 [n_{screw} + n_{washer}]	partial fastening[4] VGS Ø9 + VGU945 [n_{screw} + n_{washer}]	LBS HARDWOOD EVO Ø5 x 100 | 120[5] [pcs]
ALUMEGA240JV	8 + 8	6 + 6	6
ALUMEGA360JV	12 + 12	10 + 10	10
ALUMEGA480JV	16 + 16	14 + 14	14
ALUMEGA600JV	20 + 20	18 + 18	18
ALUMEGA720JV	24 + 24	22 + 22	22
ALUMEGA840JV	28 + 28	26 + 26	26

[4] Do not use the last row of holes.
[5] The use of LBS HARDWOOD EVO screws is mandatory.

JS - beam connector (**J**OIST) with **S**TA/**S**BD dowels

CODE	STA Ø16 [pcs]	SBD Ø7,5 [pcs]
ALUMEGA240JS	4	14
ALUMEGA360JS	6	22
ALUMEGA480JS	8	30
ALUMEGA600JS	10	38
ALUMEGA720JS	12	46
ALUMEGA840JS	14	54

MEGABOLT

H [mm]	total fastening MEGABOLT Ø12 [pcs]
240	4
360	6
480	8
600	10
720	12
840	14

INSTALLATION | **ALUMEGA HP**

MINIMUM DISTANCES AND DIMENSIONS

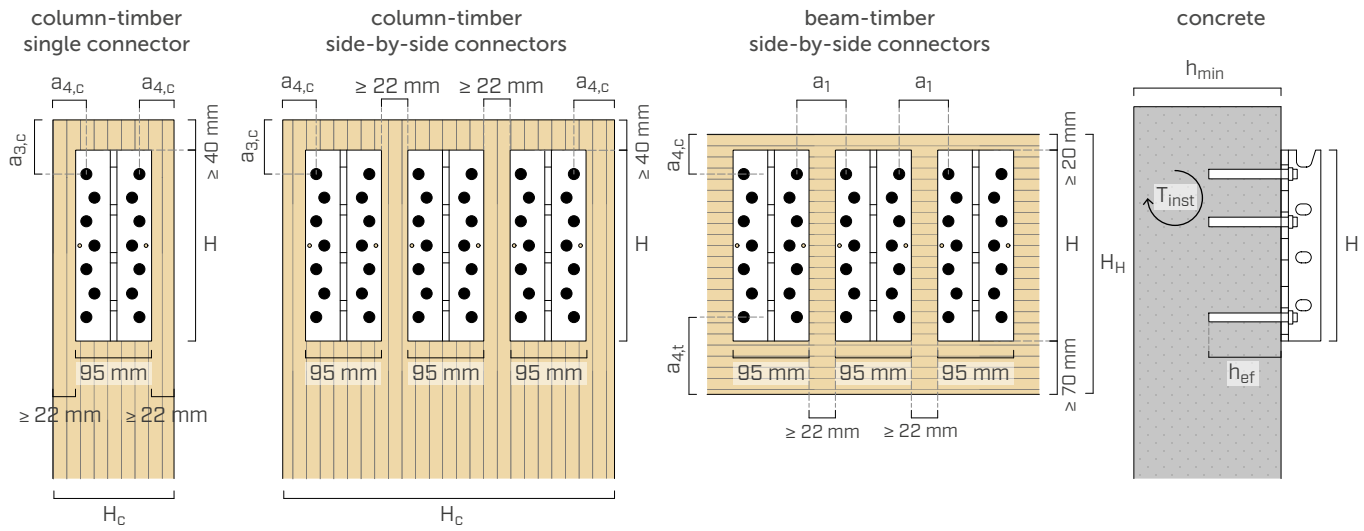

Primary beam height $H_H \geq H + 90$mm, where H is the connector height.
The spacing between connectors refers to timber elements with density $\rho_k \leq 420$ kg/m^3, screws inserted without pre-drilling hole and for stresses F_v and F_{up}. For other configurations refer to ETA-23/0824.

ALUMEGA HP - minimum distances

main element-timber			HBS PLATE Ø10			
			column load-to-grain angle α = 0°		beam load-to-grain angle α = 90°	
screw-screw	a_1	[mm]	-	-	≥ 5·d	≥ 50
screw-unloaded end	$a_{3,c}$	[mm]	≥ 7·d	≥ 70	-	-
screw-stressed edge	$a_{4,t}$	[mm]	-	-	≥ 10·d	≥ 100
screw-unloaded edge	$a_{4,c}$	[mm]	≥ 3,6·d	≥ 36	≥ 5·d	≥ 50

ALUMEGA HP - side-by-side connectors

			single connector	double connector	triple connector
column width	H_c	[mm]	139	256	373

concrete			chemical anchor VIN-FIX Ø12
minimum support thickness	h_{min}	[mm]	h_{ef} + 30 ≥ 100
concrete hole diameter	d_0	[mm]	14
tightening torque	T_{inst}	[Nm]	40

h_{ef} = effective anchoring depth in concrete

TIMBER-TO-CONCRETE FASTENING PATTERNS

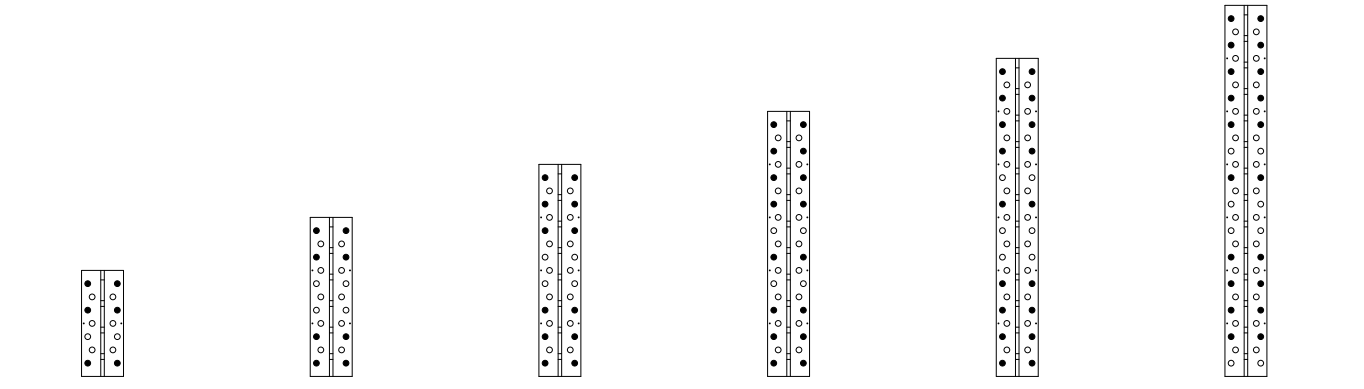

ALUMEGA240HP | ALUMEGA360HP | ALUMEGA480HP | ALUMEGA600HP | ALUMEGA720HP | ALUMEGA840HP

Depending on stress, minimum concrete thickness and edge distances, different fastening patterns can be used; we recommend using the free Concrete Anchors software (www.rothoblaas.com).

INSTALLATION | **ALUMEGA HV**

MINIMUM DISTANCES AND DIMENSIONS

total fastening on column
side-by-side connectors

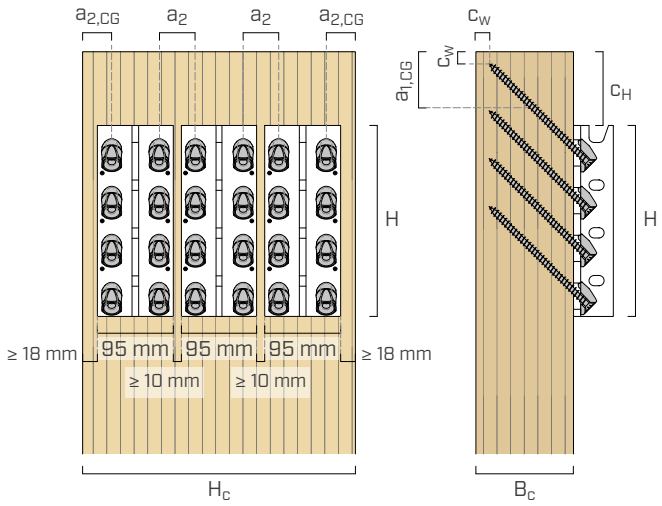

total fastening on main beam
side-by-side connectors

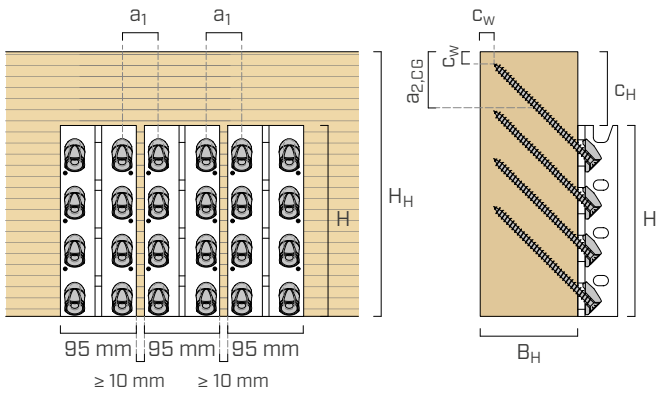

ALUMEGA HV - single connector

H	VGS Ø9 x 180			VGS Ø9 x 240			VGS Ø9 x 300		
	column	main beam		column	main beam		column	main beam	
	B_c x H_c	B_H x H_H	c_H	B_c x H_c	B_H x H_H	c_H	B_c x H_c	B_H x H_H	c_H
[mm]	[mm]	[mm]	[mm]	[mm]	[mm]	[mm]	[mm]	[mm]	[mm]
240	118 x 132	118 x 328	88	159 x 132	159 x 371	131	201 x 132	201 x 413	173
360	118 x 132	118 x 448		159 x 132	159 x 491		201 x 132	201 x 533	
480	118 x 132	118 x 568		159 x 132	159 x 611		201 x 132	201 x 653	
600	118 x 132	118 x 688		159 x 132	159 x 731		201 x 132	201 x 773	
720	118 x 132	118 x 808		159 x 132	159 x 851		201 x 132	201 x 893	
840	118 x 132	118 x 928		159 x 132	159 x 971		201 x 132	201 x 1013	

ALUMEGA HV - minimum distances

main element-timber			VGS Ø9	
screw-screw	a_1	[mm]	≥ 5·d	≥ 45
screw-screw	a_2	[mm]	≥ 5·d	≥ 45
screw-column end	$a_{1,CG}$	[mm]	≥ 8,4·d	≥ 76
beam/column screw-edge	$a_{2,CG}$	[mm]	≥ 4·d	≥ 36

ALUMEGA HV - side-by-side connectors

			single connector	double connector	triple connector
column width	H_c	[mm]	132	237	342

NOTES

- The distances $a_{1,CG}$ and $a_{2,CG}$ refer to the centre of gravity of the threaded part of the screw in the timber element.
- In addition to the stated minimum distances $a_{1,CG}$ and $a_{2,CG}$, it is recommended to use a $c_w \geq 10$ mm timber cover.
- The minimum length of VGS screws is 180 mm.
- The spacing between connectors refers to timber elements with density $\rho_k \leq 420$ kg/m^3, screws inserted without pre-drilling hole and for stresses F_v, F_{ax} and F_{up}. For other configurations refer to ETA-23/0824.

INSTALLATION | **ALUMEGA JV**

MINIMUM DISTANCES AND DIMENSIONS

total fastening on secondary beam
single connector

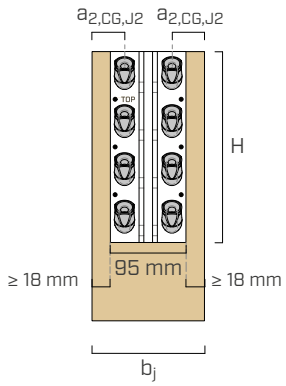

total fastening on secondary beam
side-by-side connectors

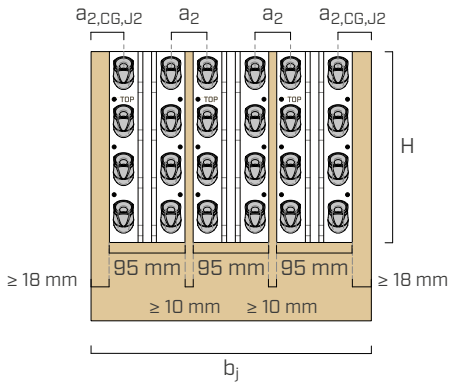

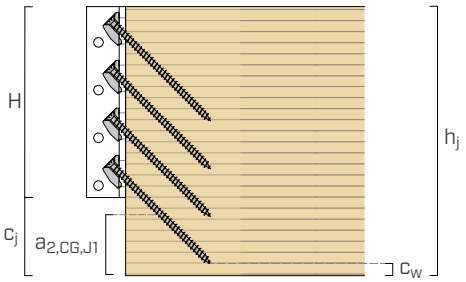

ALUMEGA JV - single connector

H	VGS Ø9 x 180		VGS Ø9 x 240		VGS Ø9 x 300	
	b_j x h_j	c_j	b_j x h_j	c_j	b_j x h_j	c_j
[mm]	[mm]	[mm]	[mm]	[mm]	[mm]	[mm]
240	132 x 333	93	132 x 376	136	132 x 418	178
360	132 x 453		132 x 496		132 x 538	
480	132 x 573		132 x 616		132 x 658	
600	132 x 693		132 x 736		132 x 778	
720	132 x 813		132 x 856		132 x 898	
840	132 x 933		132 x 976		132 x 1018	

ALUMEGA JV - minimum distances

secondary beam-timber			VGS Ø9	
screw-screw	a_2	[mm]	≥ 5·d	≥ 45
screw-beam edge	$a_{2,CG,J1}$	[mm]	≥ 8,4·d	≥ 76
screw-beam edge	$a_{2,CG,J2}$	[mm]	≥ 4·d	≥ 36

ALUMEGA JV - single connector

			single connector	double connector	triple connector
secondary beam width	b_j	[mm]	132	237	342

NOTES

- The distances $a_{2,CG,J1}$ and $a_{2,CG,J2}$ refer to the centre of gravity of the threaded part of the screw in the timber element.
- In addition to the minimum distance $a_{2,CG,J1}$ indicated, it is recommended to use a $c_w \geq 10$ mm timber cover.
- The minimum length of VGS screws is 180 mm.
- The spacing between connectors refers to timber elements with density $\rho_k \leq 420$ kg/m^3, screws inserted without pre-drilling hole and for stresses F_v, F_{ax} and F_{up}. For other configurations refer to ETA-23/0824.

INSTALLATION | **ALUMEGA JS**

MINIMUM DISTANCES AND DIMENSIONS

STA smooth dowel Ø16

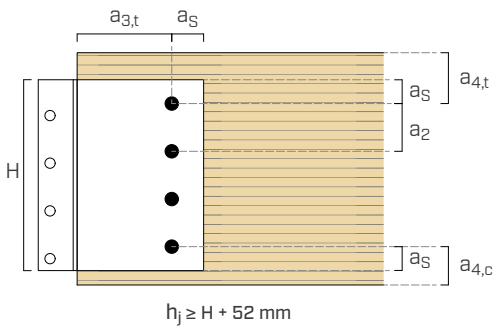

self-drilling dowel SBD Ø7,5

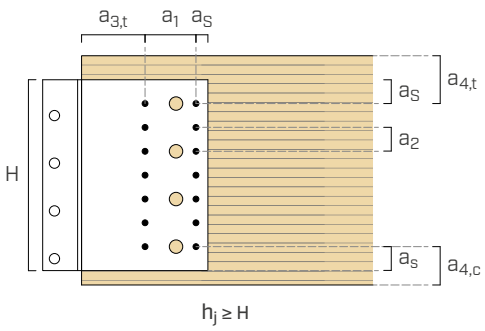

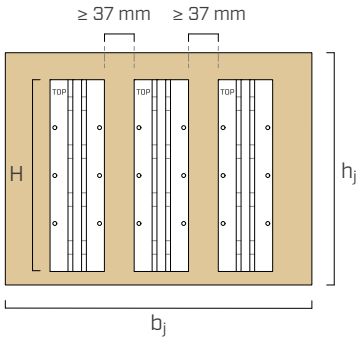

Spacing between ALUMEGA JS side-by-side ≥ 37 mm meets the minimum spacing requirement of 10 mm between HV connectors on beam and column. If the JS connector is attached to an HP connector on beam and column, the minimum spacing between connectors is 49 mm.

secondary beam-timber				**SBD Ø7,5**	**STA Ø16**
dowel-dowel	a_1[(1)]	[mm]	≥ 3·d | ≥ 5·d	≥ 23 | ≥ 38	-
dowel-dowel	a_2	[mm]	≥ 3·d	≥ 23	≥ 48
dowel-beam end	$a_{3,t}$	[mm]	max (7 d; 80 mm)	≥ 80	≥ 112
dowel-top of beam	$a_{4,t}$	[mm]	≥ 4·d	≥ 30	≥ 64
dowel-bottom of beam	$a_{4,c}$	[mm]	≥ 3·d	≥ 23	≥ 48
dowel-bracket edge	a_s[(2)]	[mm]	≥ 1,2·d_0[(3)]	≥ 10	≥ 21

(1)Spacing between SBD dowels parallel to the fibre for load-to-grain angle α = 90° (F_v or F_{up} stress) and α = 0° (F_{ax} stress) respectively.
(2)It is advisable to pay special attention to the positioning of the SBD dowels with respect to the distance from the bracket edge, using a pilot hole if necessary.
(3)Hole diameter.

ASSEMBLY OF CONNECTORS OF DIFFERENT HEIGHTS

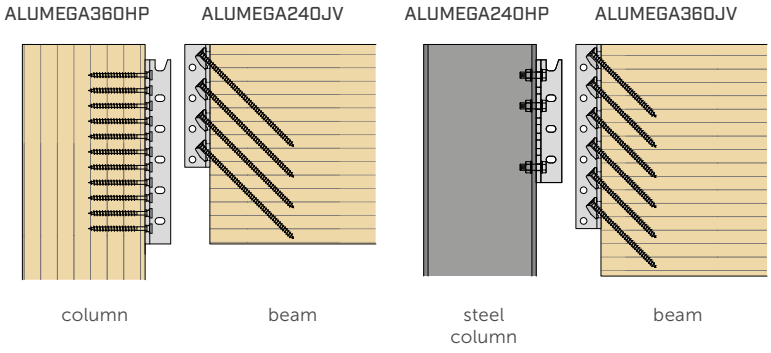

A secondary beam connector (JV and JS) may be attached to a main element connector (HV and HP) of a different height. The configurations shown allow for balancing the strengths between the HP and JV connectors, and limit the extension of the inclined screws beyond the outline of the connectors (example on the left). The final strength is the minimum between the strength of the connectors and the bolts.

PARTIAL FASTENING FOR **HV** AND **JV** CONNECTORS

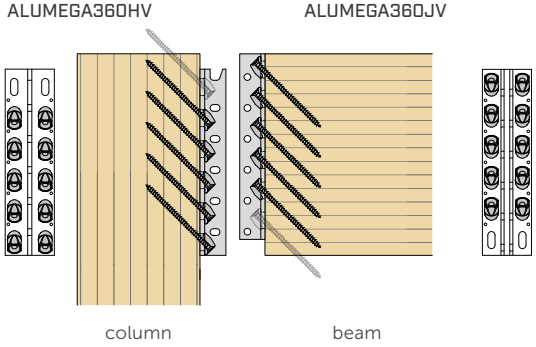

Partial fastening is permitted for the HV and JV connectors by omitting the first and last row of screws, respectively. This configuration is particularly favourable for beam-to-column connections, with the column extrados aligned with the beam extrados.

STRUCTURAL VALUES | **ALUMEGA HP** | F_v | F_{ax} | F_{up}

column

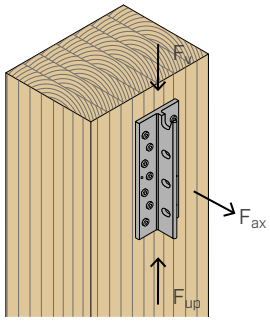

main beam

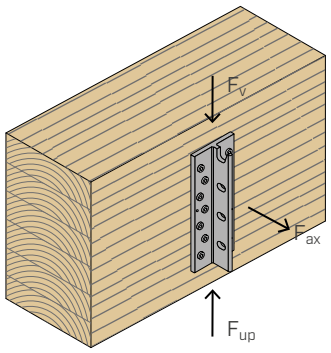

	$R_{v,k}$ | $R_{up,k}$								$R_{ax,k}$	
	$R_{v,k\ timber}$ - $R_{up,k\ timber}$				$R_{v,k\ alu}$		$R_{up,k\ alu}$		$R_{ax,k\ timber}$	$R_{ax,k\ alu}$ [1]
	column		main beam		total fastening	per bolt	total fastening	per bolt		
H	HBSP Ø10 x 100	HBSP Ø10 x 180	HBSP Ø10 x 100	HBSP Ø10 x 180	MEGABOLT M12	MEGABOLT M12	MEGABOLT M12	MEGABOLT M12	HBSP Ø10 x 180	Total
[mm]	[kN]	[kN]	[kN]	[kN]	[kN]	[kN]	[kN]	[kN]	[kN]	[kN]
240	89	118	106	142	188	47,0	139	46,3	159	100
360	137	179	172	227	286	47,7	237	47,4	239	167
480	182	238	237	311	384	48,0	335	47,9	315	223
600	226	295	302	395	483	48,3	433	48,2	390	279
720	269	350	367	479	581	48,4	532	48,3	463	335
840	311	405	432	562	679	48,5	630	48,5	535	391

[1]Strength referred to total fastening with MEGABOLT M12.

STRUCTURAL VALUES | **ALUMEGA HP** | F_v

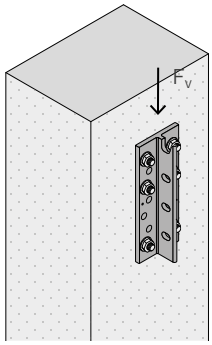

CONNECTOR		$R_{v,d}$ concrete					
		H=240	H=360	H=480	H=600	H=720	H=840
	fastening	[kN]	[kN]	[kN]	[kN]	[kN]	[kN]
ALUMEGA HP	VIN-FIX anchor Ø12 x 245	157	213	322	429	486	541

NOTES

- In the calculation, C25/30 concrete with thin reinforcement was considered in the absence of distances from the edge.
- Chemical anchor VIN-FIX according to ETA-20/0363 with threaded rods (type INA) of minimum steel class 8.8 with h_{ef} = 225 mm.
- The design values are according to EN 1992:2018 with α_{sus} = 0,6.
- The values in the table are design values referring to the dowelling patterns on page 102.
- Aluminium-side strength must be verified in accordance with ETA-23/0824.
- Refer to ETA-23/0824 for the calculation of $F_{ax,d}$, $F_{up,d}$ and $F_{lat,d}$.

STRUCTURAL VALUES | **ALUMEGA HV** | F_v | F_{ax} | F_{up}

column

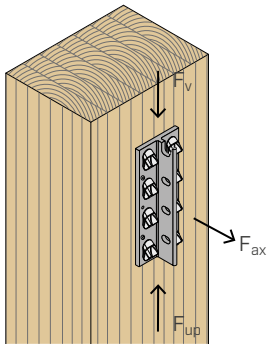

main beam

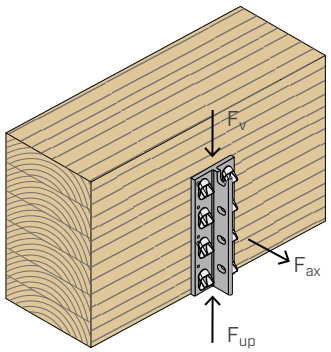

	$R_{v,k}$						$R_{ax,k}$			$R_{up,k}$
	$R_{v,k\ screw}$			$R_{tens,45,k}$	$R_{v,k\ alu}$		$R_{ax,k\ timber}$ [3]	$R_{ax,k\ alu}$		$R_{up,k\ timber}$ [2]
	$R_{v,k\ timber}$ [1][2][4]				total fastening	per bolt		total fastening	per bolt	
H	VGS Ø9 x 180	VGS Ø9 x 240	VGS Ø9 x 300	VGS Ø9	MEGABOLT M12	MEGABOLT M12	VGS Ø9	MEGABOLT M12	MEGABOLT M12	VGS Ø9
[mm]	[kN]	[kN]	[kN]	[kN]	[kN]	[kN]	[kN]	[kN]	[kN]	[kN]
240	122	-	-	179	188	47,0	38 + 0,8·$F_{v,Ek}$	100	33,4	32
360	166	-	-	244	286	47,7	57 + 0,8·$F_{v,Ek}$	167	33,4	48
480	221	308	-	325	384	48,0	76 + 0,8·$F_{v,Ek}$	234	33,4	64
600	276	385	-	406	483	48,3	94 + 0,8·$F_{v,Ek}$	300	33,4	80
720	332	463	593	488	581	48,4	113 + 0,8·$F_{v,Ek}$	367	33,4	96
840	387	540	692	569	679	48,5	132 + 0,8·$F_{v,Ek}$	434	33,4	112

STRUCTURAL VALUES | **ALUMEGA JV** | F_v | F_{ax} | F_{up}

secondary beam

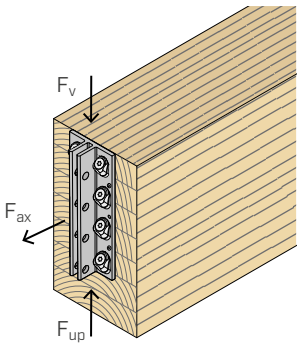

	$R_{v,k}$						$R_{ax,k}$			$R_{up,k}$
	$R_{v,k\ screw}$			$R_{tens,45,k}$	$R_{v,k\ alu}$		$R_{ax,k\ timber}$ [3]	$R_{ax,k\ alu}$		$R_{up,k\ timber}$ [2]
	$R_{v,k\ timber}$ [1][2][4]				total fastening	per bolt		total fastening	per bolt	
H	VGS Ø9 x 180	VGS Ø9 x 240	VGS Ø9 x 300	VGS Ø9	MEGABOLT M12	MEGABOLT M12	VGS Ø9	MEGABOLT M12	MEGABOLT M12	VGS Ø9
[mm]	[kN]	[kN]	[kN]	[kN]	[kN]	[kN]	[kN]	[kN]	[kN]	[kN]
240	122	-	-	179	188	47,0	29 + 0,8·$F_{v,Ek}$	100	33,4	18
360	166	-	-	244	286	47,7	44 + 0,8·$F_{v,Ek}$	167	33,4	26
480	221	308	-	325	384	48,0	59 + 0,8·$F_{v,Ek}$	234	33,4	35
600	276	385	-	406	483	48,3	73 + 0,8·$F_{v,Ek}$	300	33,4	44
720	332	463	593	488	581	48,4	88 + 0,8·$F_{v,Ek}$	367	33,4	53
840	387	540	692	569	679	48,5	103 + 0,8·$F_{v,Ek}$	434	33,4	62

NOTES

(1) For intermediate values of the screw length, it is possible to interpolate the resistance linearly.

(2) The $R_{v,k\ timber}$ and $Rup,k_{\ timber}$ strengths for partial fastening can be determined by multiplying by the following ratio: (number of screws for partial fastening)/(number of screws for total fastening).

(3) $F_{v,Ek}$ is the characteristic permanent action in the F_v direction. The design value is derived according to EN 1990 $F_{v,Ed} = F_{v,Ed} = F_{v,Ek}\cdot\gamma_{G,inf}\cdot$

(4) The test campaign for ETA-23/0824 resulted in the certification of all ALUMEGA HV and JV models with screw lengths up to 520 mm. To increase safety in the event of incorrect installation, the use of connectors with short screws is preferred. In any case, it is recommended to drill a guide hole with JIG VGU and insert screws with controlled torque (max. 20 Nm) using TORQUE LIMITER or BEAR torque wrench.

STRUCTURAL VALUES | **ALUMEGA JS** F_v | F_{ax} | F_{up}

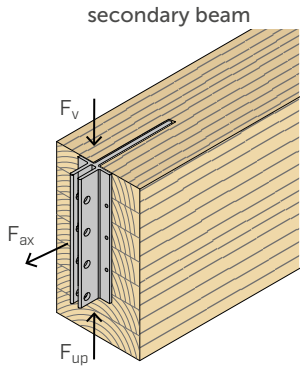

	$R_{v,k}$ | $R_{up,k}$						$R_{ax,k}$			
	$R_{v,k\ timber}$ - $R_{up,k\ timber}$		$R_{v,k\ alu}$		$R_{up,k\ alu}$		$R_{ax,k\ timber}$		$R_{ax,k\ alu}$	
			total fastening	per bolt	total fastening	per bolt			total fastening	per bolt
H	STA Ø16 x 240	SBD Ø7.5 x 195	MEGABOLT M12	MEGABOLT M12	MEGABOLT M12	MEGABOLT M12	STA Ø16 x 240	SBD Ø7.5 x 195	MEGABOLT M12	MEGABOLT M12
[mm]	[kN]	[kN]	[kN]	[kN]	[kN]	[kN]	[kN]	[kN]	[kN]	[kN]
240	77	107	188	47,0	139	46,3	164	206	100	33,4
360	142	206	286	47,7	237	47,4	245	323	167	33,4
480	206	314	384	48,0	335	47,9	327	441	234	33,4
600	269	425	483	48,3	433	48,2	409	558	300	33,4
720	331	534	581	48,4	532	48,3	491	676	367	33,4
840	394	643	679	48,5	630	48,5	573	794	434	33,4

NOTES

- The values provided are calculated with a routing in the 12 mm thick timber.
- The values provided are in accordance with the patterns on page 105. For SBD dowels a_1 = 64 mm, $a_{3,t}$ = 80 mm, a_s = 15 mm (side bracket edge) and a_s = 30 mm (bottom/top bracket edge).
- STA smooth dowel Ø16: $M_{y,k}$ = 191000 Nmm.
- SBD self-drilling dowels Ø7,5: $M_{y,k}$ = 75000 Nmm.

GENERAL PRINCIPLES

- The dimensions indicated in the installation section are minimum dimensions of structural elements, for screws inserted without pre-drilling hole, and do not take fire resistance requirements into account.
- For the calculation process a timber characteristic density ρ_k = 385 kg/m^3 has been considered.
- The coefficients k_{mod}, γ_M and γ_{M2} should be taken according to the current regulations used for the calculation.
- Dimensioning and verification of timber and concrete elements must be carried out separately.
- Characteristic values are consistent with EN 1995-1-1, EN 1999-1-1 and in accordance with ETA-23/0824.
- The following verification shall be satisfied for combined loading:

$$\left(\frac{F_{ax,d}}{R_{ax,d}}\right)^2 + \left(\frac{F_{v,d}}{R_{v,d}}\right)^2 + \left(\frac{F_{up,d}}{R_{up,d}}\right)^2 + \left(\frac{F_{lat,d}}{R_{lat,d}}\right)^2 \leq 1$$

  $F_{v,d}$ and $F_{up,d}$ are forces acting in opposite directions. Therefore only one of the forces $F_{v,d}$ and $F_{up,d}$ can act in combination with the forces $F_{ax,d}$ or $F_{lat,d}$. Refer to ETA-23/0824 for the calculation of $F_{lat,d}$.
- The $F_{ax,d}$ strength is activated as a result of the initial sliding given by the slotted holes, refer to the TENSILE STRENGTH section on page 111.
- Refer to ETA-23/0824 for the sliding modulus.
- ETA-23/0824 does not cover eccentricity in F_v loads, which means the application of torque on the connection. Designers should evaluate whether to use an additional fastening system or ALUMEGA connectors placed side by side.

SIDE-BY-SIDE CONNECTORS

- Particular attention must be paid to alignment during installation, in order to avoid different stresses between connectors. The use of the JIGALUMEGA assembly template is recommended.
- The total strength of a connection consisting of up to three side-by-side connectors is the sum of the strength of the individual connectors.

ALUMEGA HP-ALUMEGA JS

- Design values can be obtained from characteristic values as follows:

$$R_{v,d} = min \begin{cases} \frac{R_{v,k\ timber} \cdot k_{mod}}{\gamma_M} \\ \frac{R_{v,k\ alu}}{\gamma_{M2}} \end{cases} \qquad R_{up,d} = min \begin{cases} \frac{R_{up,k\ timber} \cdot k_{mod}}{\gamma_M} \\ \frac{R_{up,k\ alu}}{\gamma_{M2}} \end{cases}$$

$$R_{ax,d} = min \begin{cases} \frac{R_{ax,k\ timber} \cdot k_{mod}}{\gamma_M} \\ \frac{R_{ax,k\ alu}}{\gamma_{M2}} \end{cases}$$

- For F_{ax} stresses, the splitting of the main beam or column caused by forces perpendicular to the fibre (ALUMEGA HP) must be checked separately.
- The end of the secondary beam must be in contact with the wing of the JS connector.

ALUMEGA HV-ALUMEGA JV

- Design values can be obtained from characteristic values as follows:

$$R_{v,d} = min \begin{cases} \frac{R_{v,k\ timber} \cdot k_{mod}}{\gamma_M} \\ \frac{R_{tens,45,k}}{\gamma_{M2}} \\ \frac{R_{v,k\ alu}}{\gamma_{M2}} \end{cases} \qquad R_{up,d} = \frac{R_{up,k\ timber} \cdot k_{mod}}{\gamma_M}$$

$$R_{ax,d} = min \begin{cases} \frac{R_{ax,k\ timber} \cdot k_{mod}}{\gamma_M} \\ \frac{R_{ax,k\ alu}}{\gamma_{M2}} \end{cases}$$

MAIN CHARACTERISTICS

ASSEMBLY TOLERANCE

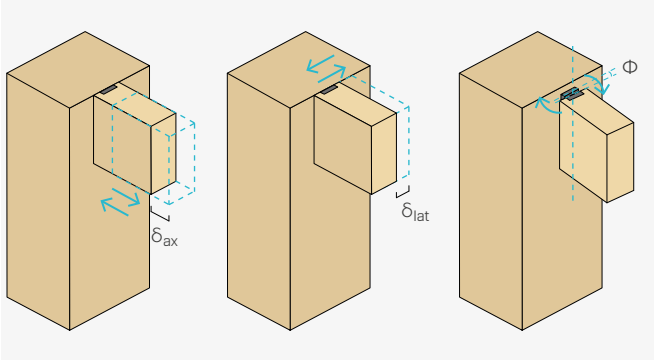

It offers the greatest assembly tolerance of any high-strength connector on the market: δ_{ax} = 8 mm (± 4 mm), δ_{lat} = 3 mm (± 1,5 mm) e Φ = ± 6°.

MODULARITY

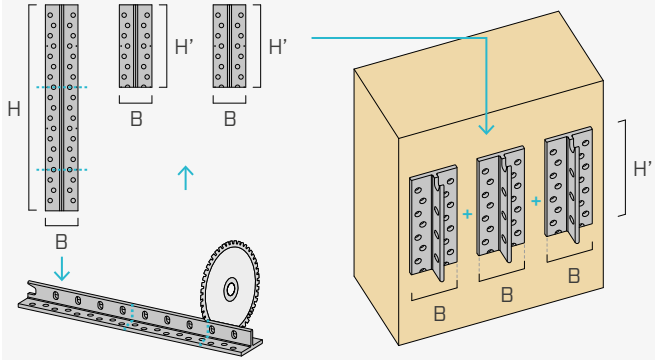

Available in 6 standard sizes (heights); the height H can be changed due to the modular connector geometry. In addition, connectors can be placed side-by-side to meet geometric or strength requirements.

INTER-STOREY DRIFT FOR HORIZONTAL ACTIONS

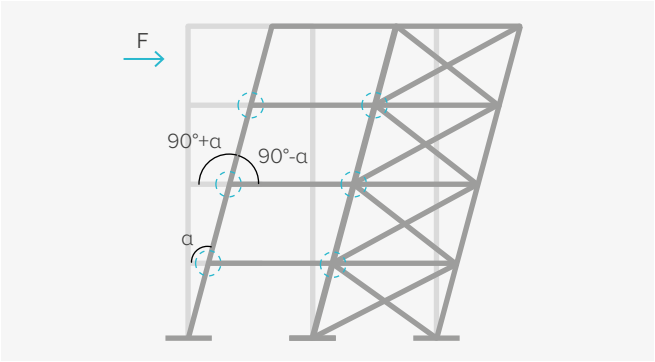

The rotation of the connector is compatible with the inter-storey drift caused by earthquake or wind actions and helps reducing momentum transfer and structural damage.

ROTATION FOR GRAVITATIONAL LOADS

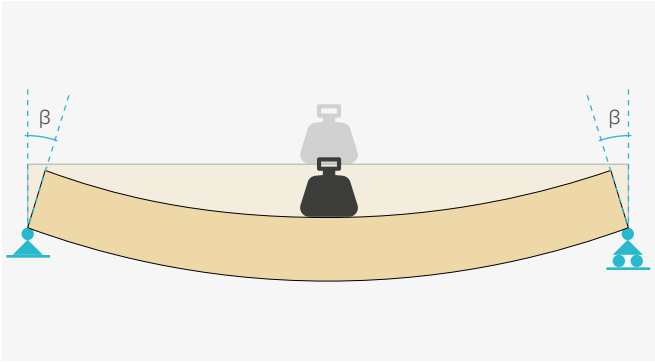

For gravitational loads, the connector has a hinged structural behaviour and ensures free rotation at the ends of the beam.

STRUCTURAL STRENGTH

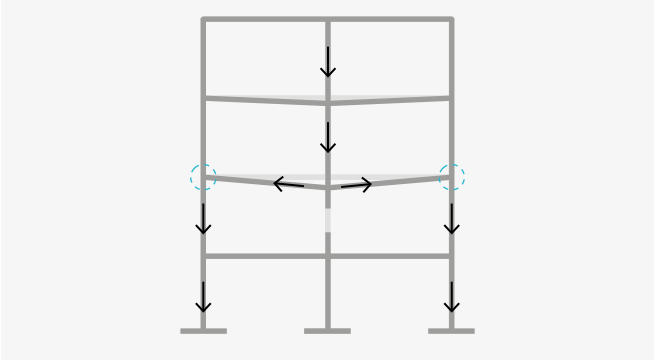

The connector withstands high axial tensile forces, allowing the catenary effect to develop in accidental situations. This contributes to the structural strength of the building, ensuring greater safety and resistance.

DISASSEMBLY

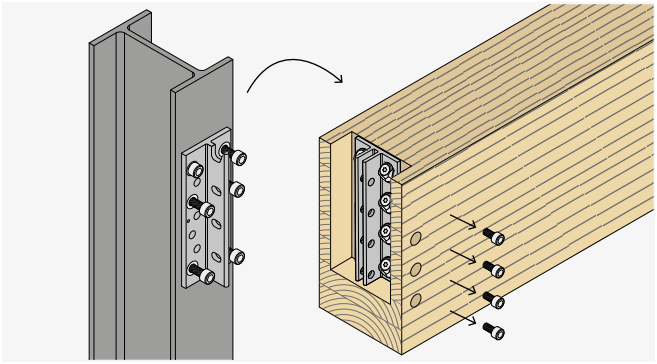

Particularly suitable for facilitating the dismantling of temporary structures or structures that have reached the end of their useful life. The connection with ALUMEGA can be easily disassembled by removing the MEGABOLT bolts, thus simplifying the separation of components (Design for Disassembly).

INSTALLATION CONFIGURATIONS

The standard configuration for the manufacture of timber elements consists in a nominal 4 mm gap.
On site, a variety of configurations can occur between the two limiting cases: zero gap and maximum 8 mm gap.

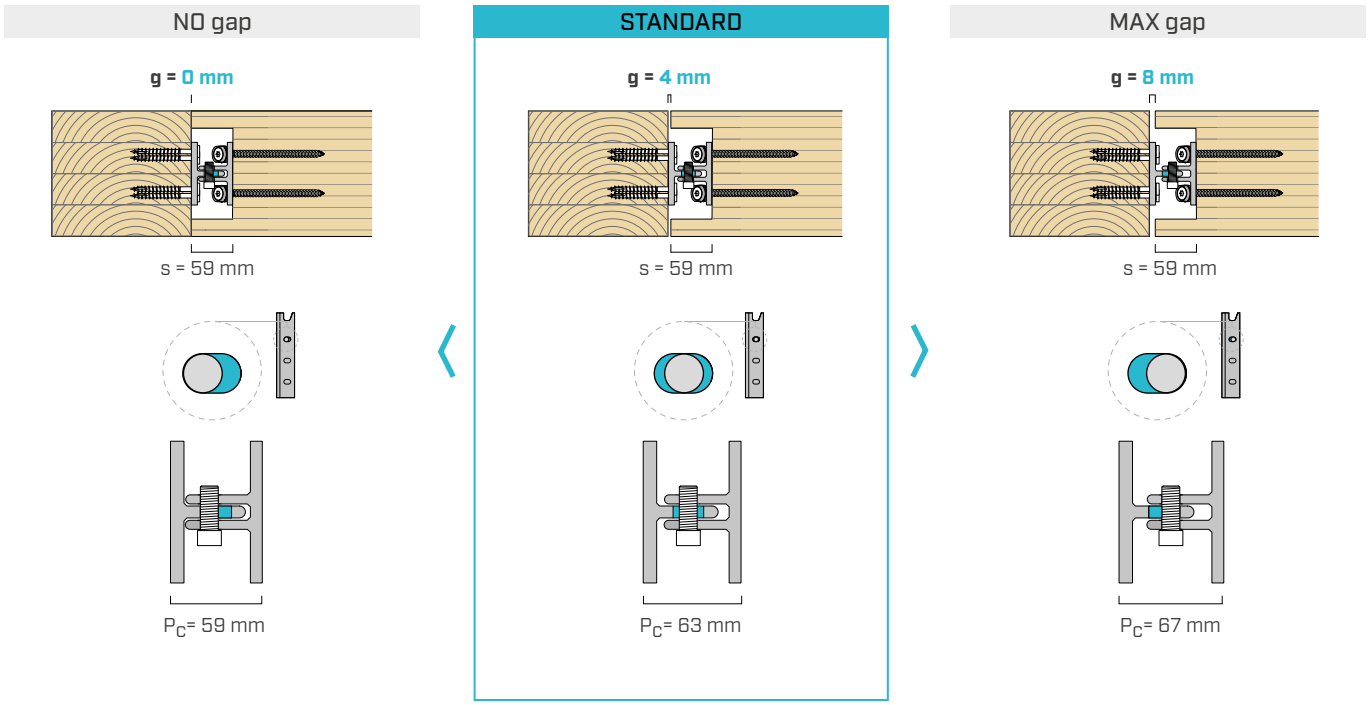

If it is required to limit the gap in the construction, for example due to fire resistance requirements of the connection, the depth of the routing in the secondary beam can be modified. As the depth of the routing increases, the gap between the secondary beam and the primary element is reduced and, at the same time, the axial installation tolerance is reduced. The limit case, for which particular precision during assembly is required, is achieved with a routing depth of 67 mm and zero axial installation gap/tolerance.

routing depth s [mm]	assembled connectors size P_C [mm]								
	59	60	61	62	63	64	65	66	67
59	g = 0 mm	g = 1 mm	g = 2 mm	g = 3 mm	g = 4 mm	g = 5 mm	g = 6 mm	g = 7 mm	g = 8 mm
61	-	-	g = 0 mm	g = 1 mm	g = 2 mm	g = 3 mm	g = 4 mm	g = 5 mm	g = 6 mm
63	-	-	-	-	g = 0 mm	g = 1 mm	g = 2 mm	g = 3 mm	g = 4 mm
65	-	-	-	-	-	-	g = 0 mm	g = 1 mm	g = 2 mm
67	-	-	-	-	-	-	-	-	g = 0 mm

Fire resistance requirements can be met by limiting the gap or by using dedicated products for fire protection of metal elements, such as FIRE STRIPE GRAPHITE, FIRE SEALING SILICONE, MS SEAL and FIRE SEALING ACRYLIC.

INTELLECTUAL PROPERTY

- Some ALUMEGA models are protected by the following Registered Community Designs: RCD 015032190-0002 | RCD 015032190-0003 | RCD 015032190-0004 | RCD 015032190-0005 | RCD 015032190-0006 | RCD 015032190-0007 | RCD 015032190-0008 | RCD 015032190-0009.

TENSILE STRENGTH

The strength values F_{ax} are valid as a result of the initial sliding given by the horizontally slotted holes in the ALUMEGA HP and HV connectors. If there are design requirements according to which the connection must be able to withstand tensile stress without initial sliding or limited initial sliding, one of the following options is recommended:

- In the case of a concealed connection, it is possible to modify the depth of the routing in the secondary beam (or in the column) in such a way that the axial sliding is entirely or partially reduced. Refer to the INSTALLATION CONFIGURATIONS section.
- Use an additional fastening system positioned at the top of the beam. Standard (e.g. WHT PLATE T) or customised metal plates as well as screw systems can be used, depending on the geometrical and strength requirements.
- Once the connection assembly is complete, a SBD self-drilling dowel can be inserted in the middle of the assembled connectors. It is advisable to pay particular attention to the positioning of the dowel, ensuring that the functionality and capacity of the MEGABOLT bolts and VGU washers are not interfered with and compromised, possibly using a pilot hole.

The proposed solutions can change the rotational stiffness of the connection and its hinge behaviour.

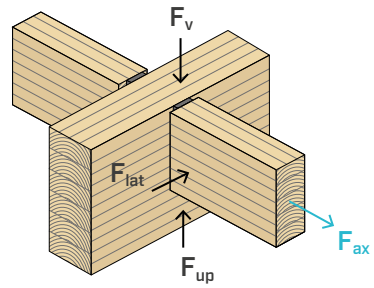

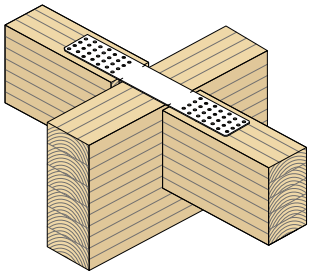

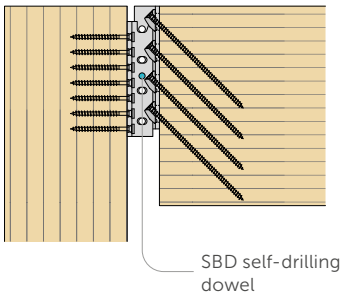

ROTATIONAL COMPATIBILITY

The ALUMEGA HV and HP connectors have horizontally slotted holes, which not only offer installation tolerance, but also allow free rotation of the connection. The table shows the maximum free rotation α_{free} of the connection and the respective storey-drift, as a function of the height H of the connector. The connector, once it has reached α_{free} rotation has a further $\alpha_{semi\text{-}rigid}$ rotation before failure. Rotation $\alpha_{semi\text{-}rigid}$ occurs due to the deformation of the aluminium connector and its fastening.
The moment-rotation graph shows a comparison between the theoretical behaviour of a connection with ALUMEGA and that of a common semi-rigid connection.
For a connection with ALUMEGA, it is possible to assume a first phase, the extension of which is a function of H, in which the behaviour is hinge-like; in a second phase, semi-rigid behaviour can be assumed.
It should be pointed out that free rotation takes place without deformation or damage to the aluminium and fasteners, and that the above assessments are to be confirmed experimentally. See www.rothoblaas.com for updates.

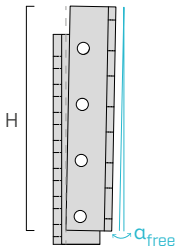

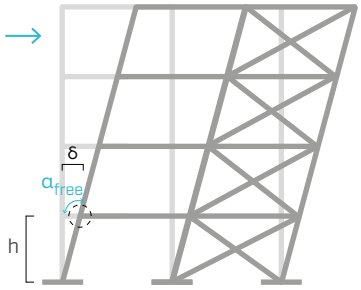

H [mm]	maximum free rotation α_{free} [°]	STOREY-DRIFT δ/h [%]
240	2,5	4,4
360	1,5	2,7
480	1,1	1,9
600	0,8	1,5
720	0,7	1,2
840	0,6	1,0

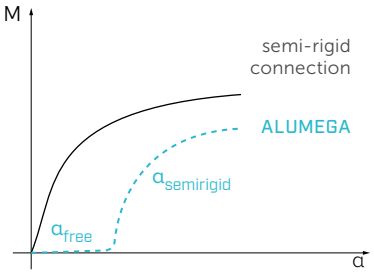

"TOP-DOWN" INSTALLATION WITH ROUTING IN THE SECONDARY BEAM

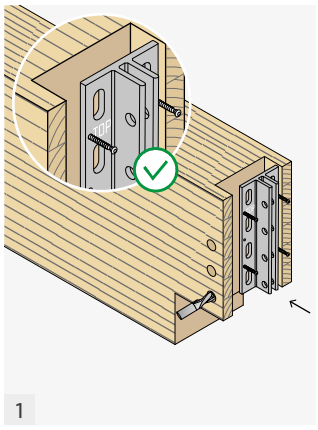

Make the routing in the secondary beam and drill the holes (min. Ø25) for the MEGABOLT bolts. Position the ALUMEGA JV connector on the secondary beam paying particular attention to the correct orientation with reference to the "TOP" marking on the connector. Fasten the Ø5 LBS HARDWOOD EVO positioning screws.

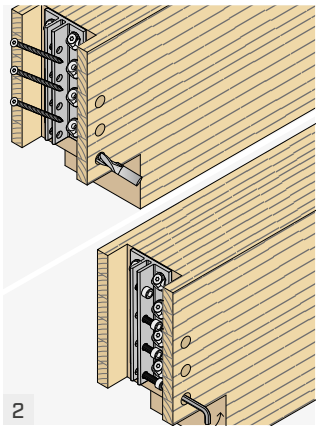

Place the VGU washer in the slotted hole and, using the JIG-VGU jig, drill a Ø5 pilot hole with a minimum length of 50 mm. Install the VGS screw and respect the 45° angle of insertion. Insert the MEGABOLT bolts in the following way: the first bolt must pass completely through both cores of the connector, while the other bolts must only pass through the first core.

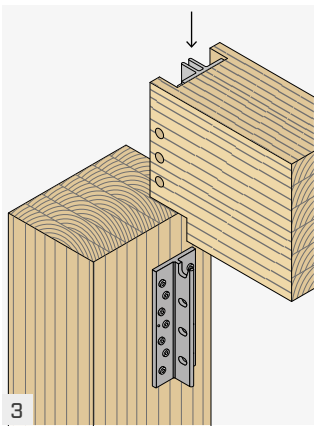

Position the ALUMEGA HP connector on the column, fasten the Ø5 LBS HARDWOOD EVO positioning screws (optional) and the HBS PLATE screws. Hook the secondary beam from top to bottom using the upper positioning notch in the ALUMEGA HP connector.

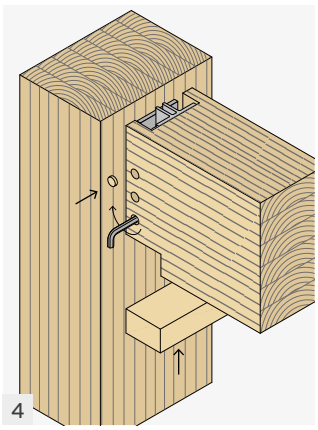

Fully tighten the MEGABOLT bolts with a 10 mm hexagonal wrench.
Place the TAPS timber plugs in the circular holes and insert the closing board, hiding the connection for fire resistance requirements.

"TOP-DOWN" INSTALLATION WITH ROUTING IN THE COLUMN

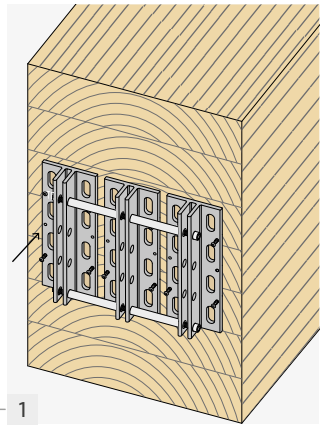

Place the three JV connectors assembled with template and bolts on the secondary beam. Once the Ø5 LBS HARDWOOD EVO positioning screws are fastened, remove the jigs and bolts.

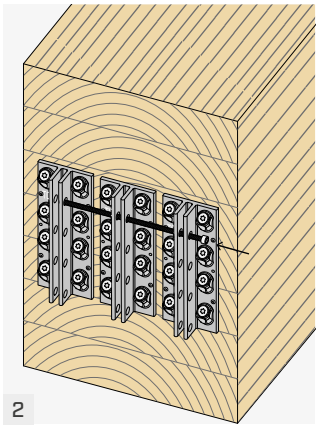

Place the VGU washer in the slotted hole and, using the JIG-VGU jig, drill a Ø5 pilot hole with a minimum length of 50 mm. Install the VGS screw and respect the 45° angle of insertion. Insert the upper MEGABOLT bolt through the three JV connectors.

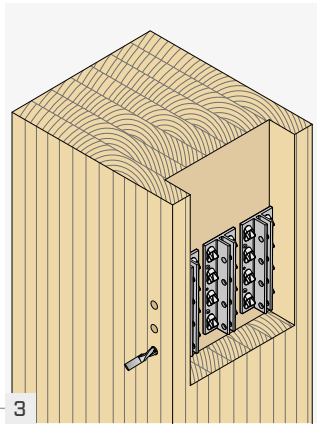

Make the routing in the column and drill the holes (min. Ø25) for the MEGABOLT bolts. Use the jig for positioning the ALUMEGA HV connectors. Fasten the Ø5 LBS HARDWOOD EVO positioning screws. Place the VGU washer in the slotted hole and, using the JIG-VGU jig, drill a Ø5 pilot hole with a minimum length of 50 mm. Install the VGS screw and respect the 45° angle of insertion.

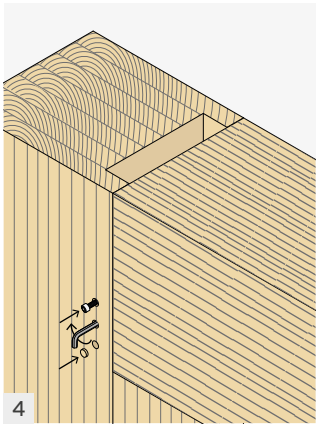

Hook the secondary beam from top to bottom using the upper positioning notch in the ALUMEGA HV connectors.
Insert the remaining MEGABOLT bolts and screw them in completely with a 10 mm hexagonal wrench.

0

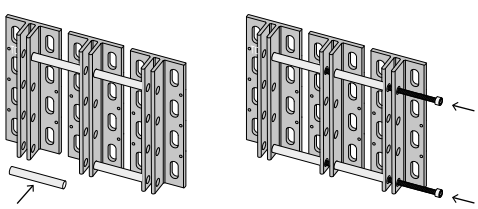

MANUALS

JIG INSTALLATION

Place the JV connectors side by side and position the jigs at two rows of M12 holes in the connectors. Insert the MEGABOLT bolts through the M12 threaded holes, taking care to maintain the alignment between connectors.
The use of the jig for HP and HV connectors is similar, it is recommended to use M12 nuts to avoid MEGABOLT bolts slipping out during installation.

"BOTTOM-UP" INSTALLATION WITH ROUTING IN THE SECONDARY BEAM

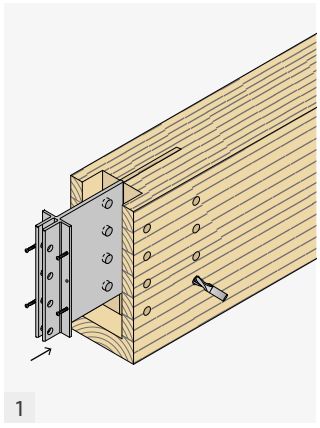

Carry out the routing at partial height in the secondary beam and drill the holes for the MEGABOLT bolts (min. Ø25) and the STA dowels Ø16. Position the ALUMEGA JS connector on the secondary beam paying particular attention to the correct orientation with reference to the "TOP" marking on the connector. Fasten the Ø5 LBS HARDWOOD EVO positioning screws (optional).

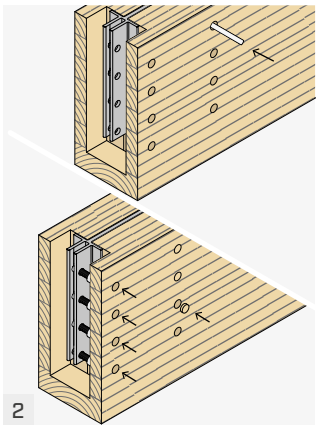

Insert STA dowels Ø16 and then close with TAPS timber plugs. Insert the MEGABOLT bolts through the first core of the connector.

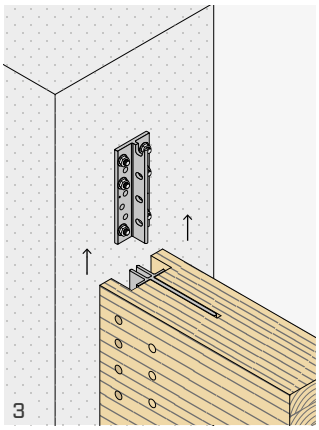

Place the ALUMEGA HP connector on concrete with INA threaded rods Ø12 and VIN-FIX resin, according to the installation instructions. Lift the secondary beam from the bottom upwards, and only screw the upper MEGABOLT bolt fully in when the ALUMEGA JS connector is positioned above the ALUMEGA HP connector.

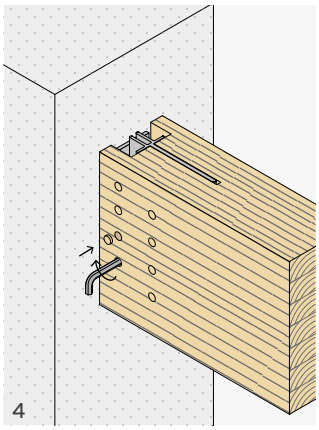

Hook the secondary beam from top to bottom using the upper positioning notch in the ALUMEGA HP connector.
Fully screw in the remaining MEGABOLT bolts with a 10 mm hexagonal wrench and insert the TAPS timber plugs into the round holes.

VISIBLE "TOP-DOWN" INSTALLATION

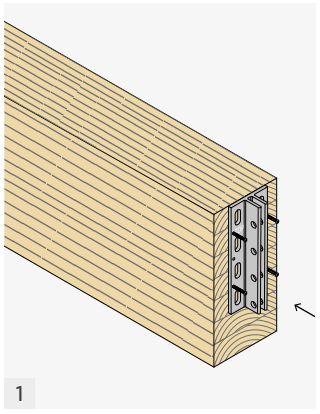

Place the ALUMEGA JV connector on the secondary beam, paying particular attention to the orientation according to the "TOP" marking on the connector. Then, fasten the Ø5 LBS HARDWOOD EVO positioning screws.

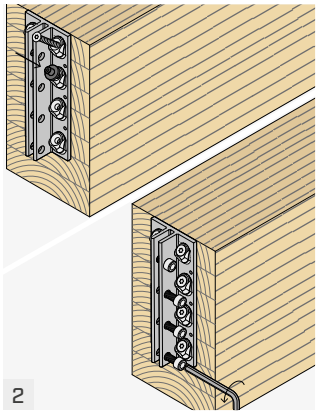

Place the VGU washer in the slotted hole and, using the JIG-VGU jig, drill a Ø5 pilot hole with a minimum length of 50 mm.
Install the VGS screw and respect the 45° angle of insertion.
Insert the MEGABOLT bolts in the following way: the first bolt must pass completely through both cores of the connector, while the other bolts must only pass through the first core.

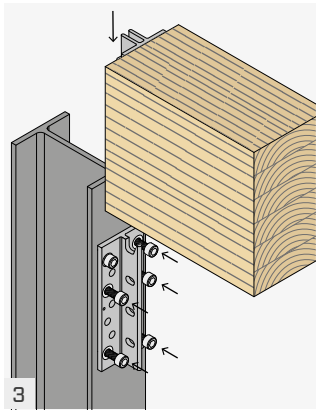

Fasten the ALUMEGA HP connector to steel using M12 bolts and washer, MEGABOLT bolts can be used. Hook the secondary beam from top to bottom using the upper positioning notch in the ALUMEGA HP connector.

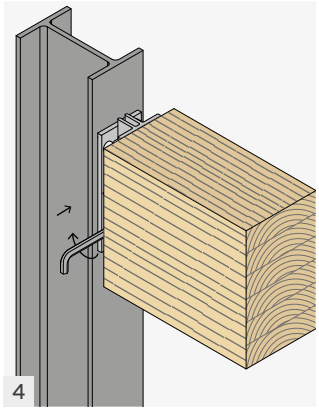

Fully tighten the MEGABOLT bolts with a 10 mm hexagonal wrench.

DISC FLAT

REMOVABLE CONCEALED CONNECTOR

VIDEO

DESIGN REGISTERED

CE ETA-19/0706

UNIVERSAL

Resistant to forces in all directions due to clamping of elements by through-rod. It can be installed on any timber surface and attached to any support by means of a bolt.

PREFABRICATION

Simple to install thanks to the possibility of being tightened after the assembly. The connector can be mounted off-site and fastened on-site with a simple bolt.

DISASSEMBLED

Usable for temporary structures, it can be easily removed thanks to the pass-through rod.

USA, Canada and more design values available online.

SERVICE CLASS SC1 SC2

MATERIAL

S235 Fe/Zn5c — S235 bright zinc plated Fe/Zn5c carbon steel.

EXTERNAL LOADS

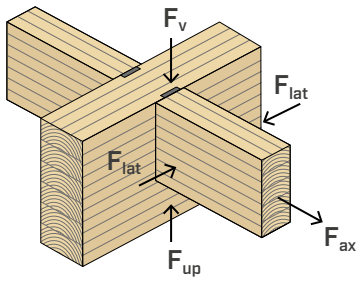

VIDEO
Scan the QR Code and watch the video on our YouTube channel



DISCF120



DISCF80



DISCF55



FIELDS OF USE

Concealed joints for beams and columns in timber-to-timber, timber-to-steel or timber-to-concrete configuration, suitable for hybrid structures, non-standard situations or special requirements.

Can be applied to:

- solid timber softwood and hardwood
- glulam, LVL





DISASSEMBLED

Completely concealed joint to ensure a pleasant aesthetic appearance. It can be disassembled by removing the bolt.

OUTDOOR

On special request and depending on quantities, available in a painted version or with increased zinc thickness for better corrosion resistance for outdoor applications.

CODES AND DIMENSIONS

CODE	D [mm]	s [mm]	M [mm]	*D [in]*	*s [in]*	*M [in]*	$n_{45°}$ - Ø	$n_{0°}$ - Ø	pcs
DISCF55	55	10	12	*2 3/16*	*0.40*	*0.48*	8 - Ø5 | *0.20*	2 - Ø5 | *0.20*	16
DISCF80	80	15	16	*3 1/8*	*0.60*	*0.63*	8 - Ø7 | *0.28*	2 - Ø7 | *0.28*	8
DISCF120	120	15	20	*4 3/4*	*0.60*	*0.79*	16 - Ø7 | *0.28*	2 - Ø7 | *0.28*	4

Screws not included in the box.

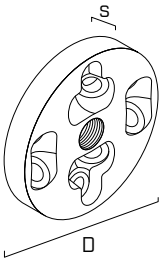

GEOMETRY

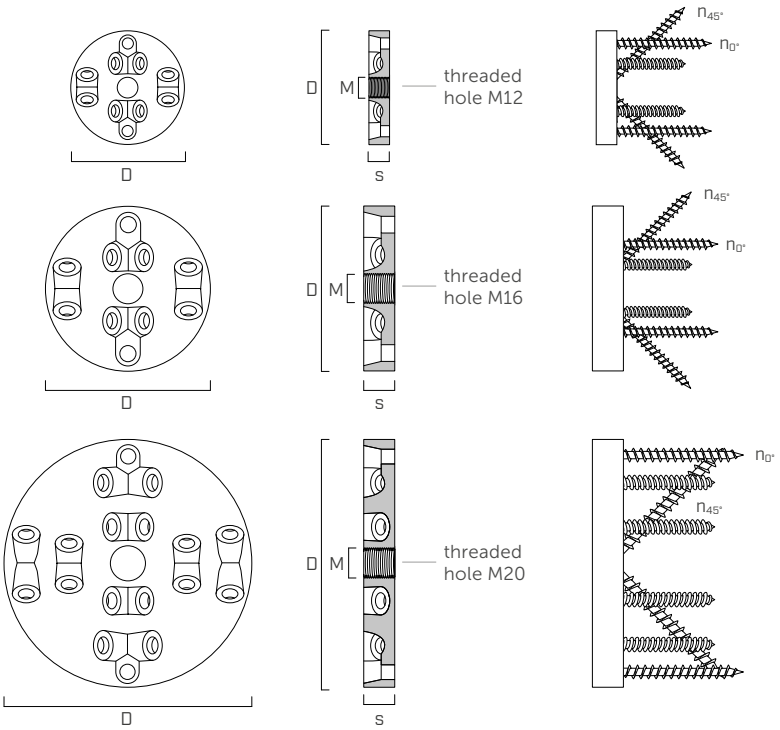

FASTENERS

type	description		d [mm]	connector	page
LBS **LBS EVO**	round head screw for plates	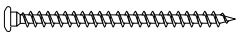	5 7 7	**DISCF55** **DISCF80** **DISCF120**	571
LBSH **LBSH EVO**	round head screw on hardwoods		5 7 7	**DISCF55** **DISCF80** **DISCF120**	572
KOS	hexagonal head bolt	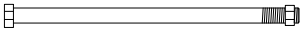	12 16 20	**DISCF55** **DISCF80** **DISCF120**	168
ULS1052	washer	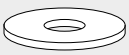	12 16 20	**DISCF55** **DISCF80** **DISCF120**	176

CODE	secondary beam-timber		main element-timber			
	screws	$n_{45°} + n_{0°}$	bolts	n	washer	n
DISCF55	LBS | LBS EVO Ø5	8 + 2	KOS M12	1	ULS14586 - M12	1
DISCF80	LBS | LBS EVO Ø7	8 + 2	KOS M16	1	ULS18686 - M16	1
DISCF120	LBS | LBS EVO Ø7	16 + 2	KOS M20	1	ULS22808 - M20	1

MINIMUM DIMENSIONS AND SPACING

CODE	LBS | LBS EVO	secondary beam	main element				spacing		
	Ø x L	b_j x h_j	H_H[(1)]	D_H	S_F	D_F	a_1	$a_{3,t}$	$a_{4,t}$
	[mm]	[mm]	[mm]	[mm]	[mm]	[mm]	[mm]	[mm]	[mm]
DISCF55	Ø5 x 50	100 x 100	110	13	11	56	90	50	60
	Ø5 x 60	110 x 110	115	13	11	56	105	55	60
	Ø5 x 70	130 x 130	130	13	11	56	120	65	60
DISCF80	Ø7 x 60	120 x 120	150	17	16	81	110	60	90
	Ø7 x 80	150 x 150	165	17	16	81	140	75	90
	Ø7 x 100	180 x 180	180	17	16	81	170	90	90
DISCF120	Ø7 x 80	160 x 160	200	21	16	121	150	80	120
	Ø7 x 100	190 x 190	215	21	16	121	180	95	120

(1) H_H is only valid in case of installation with routing. For installation without routing, the minimum bolt distances according to EN 1995-1-1:2014 apply.

INSTALLATION

WITHOUT SLOT

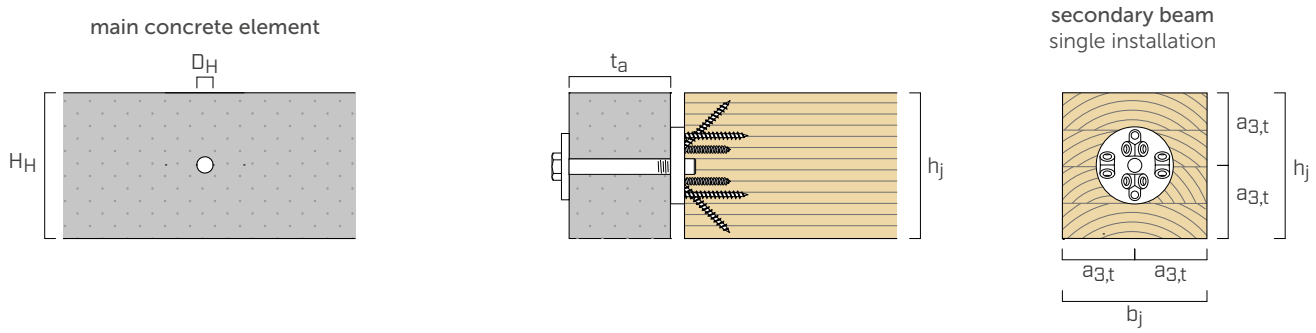

WITH OPEN SLOT

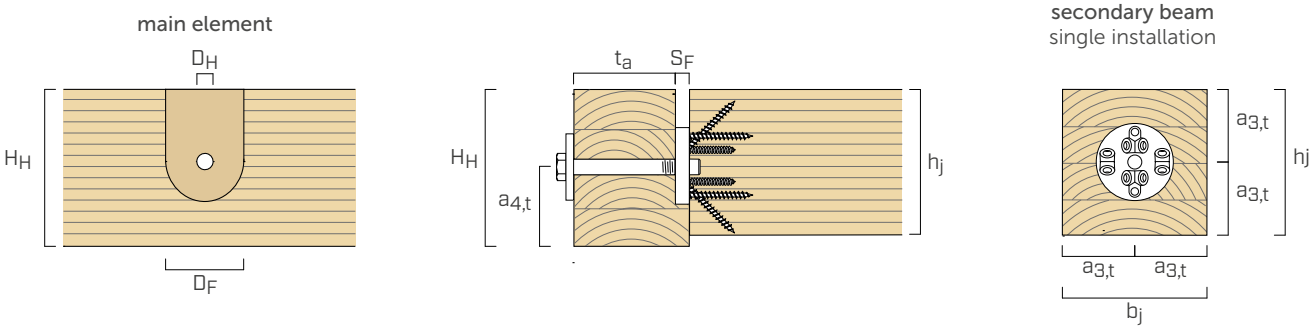

WITH ROUND SLOT

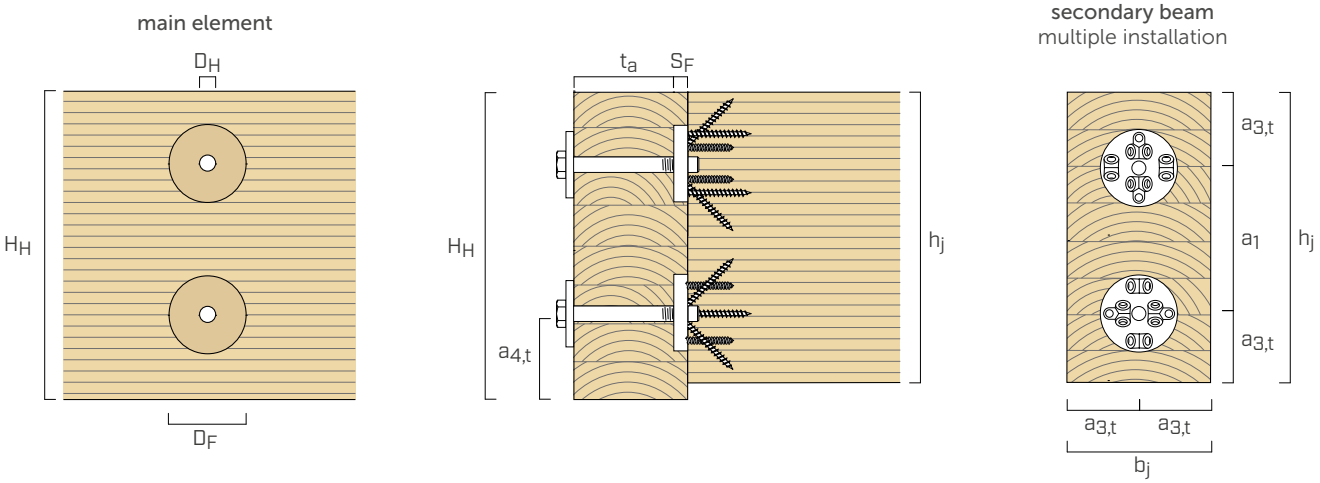

STRUCTURAL VALUES | TIMBER-TO-TIMBER | F_v | F_{lat} | F_{ax}

STRENGTHS - SECONDARY BEAM

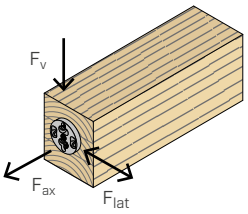

connector	LBS | LBS EVO		$R_{v,k\ joist} = R_{lat,k\ joist}$		$R_{ax,k\ joist}$	
	Ø x L	b_j x h_j	GL24h	LVL	GL24h	LVL
	[mm]	[mm]	[kN]	[kN]	[kN]	[kN]
DISCF55	Ø5 x 50	100 x 100	9,6	8,0	17,0	11,6
	Ø5 x 60	110 x 110	11,8	9,9	21,0	14,3
	Ø5 x 70	130 x 130	14,1	11,8	24,9	17,0
DISCF80	Ø7 x 60	120 x 120	14,7	12,3	26,1	17,9
	Ø7 x 80	150 x 150	20,9	17,5	37,2	25,5
	Ø7 x 100	180 x 180	27,2	22,7	48,2	33,0
DISCF120	Ø7 x 80	160 x 160	41,9	48,1	70,7	81,2
	Ø7 x 100	190 x 190	54,4	62,5	91,7	105,5

SHEAR STRENGTHS - MAIN ELEMENT

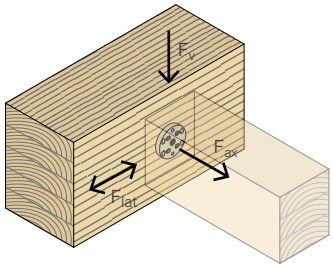

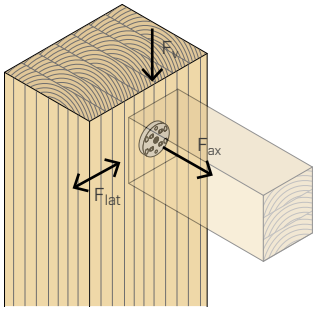

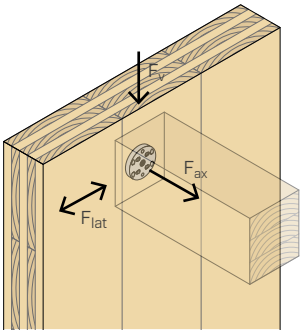

connector	$R_{v,k\ main}$								
	WITHOUT SLOT					WITH ROUTING			
	beam		column		wall	beam		column	
	GL24h	LVL	GL24h	LVL	CLT	GL24h	LVL	GL24h	LVL
	[kN]	[kN]	[kN]	[kN]	[kN]	[kN]	[kN]	[kN]	[kN]
DISCF55	13,9	14,3	19,9	23,0	19,0	25,1	28,3	35,6	42,5
DISCF80	21,2	21,7	31,0	37,5	25,7	40,8	46,2	58,6	71,9
DISCF120	34,1	35,0	48,1	54,4	32,8	71,1	80,0	98,7	117,5

connector	$R_{lat,k\ main}$								
	WITHOUT SLOT					WITH ROUTING			
	beam		column		wall	beam		column	
	GL24h	LVL	GL24h	LVL	CLT	GL24h	LVL	GL24h	LVL
	[kN]	[kN]	[kN]	[kN]	[kN]	[kN]	[kN]	[kN]	[kN]
DISCF55	19,9	23,0	13,9	14,3	17,5	35,6	42,5	25,1	28,3
DISCF80	31,0	37,5	21,2	21,7	23,8	58,6	71,9	40,8	46,2
DISCF120	48,1	54,4	34,1	35,0	30,7	98,7	117,5	71,1	80,0

TENSILE STRENGTHS - MAIN ELEMENT

connector	$R_{ax,k\ main}$		
	GL24h	LVL	CLT
	[kN]	[kN]	[kN]
DISCF55	18,7	22,4	17,9
DISCF80	25,3	30,4	24,3
DISCF120	34,8	41,8	33,5

INSTALLATION OPTIONS

The direction of the connector makes no difference. It can be installed according to OPTION 1 or OPTION 2.

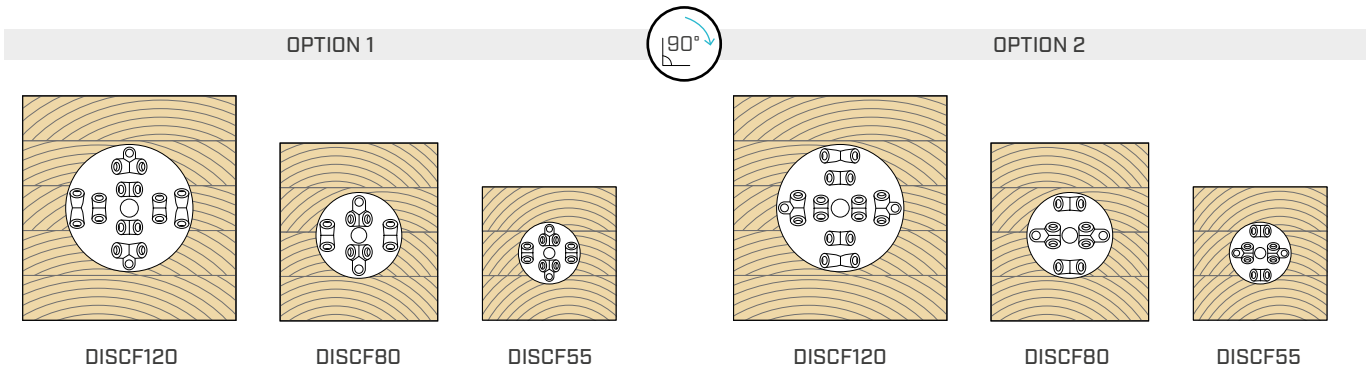

CONNECTION STIFFNESS

Connection stiffness can be calculated according to ETA-19/0706, with the following equation:

$$K_{ax,ser} = 150 \text{ kN/mm}$$

$$K_{v,ser} = K_{lat,ser} = \frac{\rho_m^{1,5} \cdot d}{23} \text{ N/mm}$$ for shear stressed connectors in timber-to-timber joints

$$K_{v,ser} = K_{lat,ser} = 70 \cdot d^2 \text{ N/mm}$$ for shear stressed connectors in steel-to-timber joints

where:

- d is the bolt diameter in mm;
- ρ_m is the average density of the main element, in kg/m³.

GENERAL PRINCIPLES

- Characteristic values comply with the EN 1995-1-1:2014 standard in accordance with ETA-19/0706.
- The calculation process used a timber characteristic density of ρ_k = 385 kg/m³ for GL24h, ρ_k = 480 kg/m³ for LVL and ρ_k = 350 kg/m³ for CLT.
- Screws with the same length must be used in all holes.
- Dimensioning and verification of timber and concrete elements must be carried out separately.
- There are two options or installation on secondary beam (option 1/option 2). The strengths do not vary in both cases.
- The following verification shall be satisfied for combined loading:

$$\left(\frac{F_{ax,d}}{R_{ax,d}}\right)^2 + \frac{F_{v,d}}{R_{v,d}} + \frac{F_{lat,d}}{R_{lat,d}} \leq 1$$

STRUCTURAL VALUES

- The characteristic strength values of the connection are obtained as follows:

$$R_{v,k} = min \begin{cases} R_{v,k\ joist} \\ R_{v,k\ main} \end{cases}$$

$$R_{ax,k} = min \begin{cases} R_{ax,k\ joist} \\ R_{ax,k\ main} \end{cases}$$

$$R_{lat,k} = min \begin{cases} R_{lat,k\ joist} \\ R_{lat,k\ main} \end{cases}$$

- The $R_{v,k\ main}$ and $R_{lat,k\ main}$ strengths are calculated for a useful bolt length of:
  - t_a = 100 mm for DISCF55 on beam or column;
  - t_a = 120 mm for DISCF80 on beam or column;
  - t_a = 180 mm for DISCF120 on beam or column;
  - t_a = 100 mm for DISCF55, DISCF80 and DISCF120 on wall.

  In the case of longer or shorter lengths, the strengths can be calculated according to ETA-19/0706.
- The $R_{ax,k\ main}$ strengths are calculated according to ETA-19/0706 with DIN1052 washers. In the calculation, $f_{c,90,k}$ = 2.5 MPa for GL24h, $f_{c,90,k}$ = 3.0 MPa for LVL and $f_{c,90,k}$ = 2.4 MPa for CLT were considered. The calculations must be carried out again if other washers are used.
- Design values can be obtained from characteristic values as follows:

$$R_d = \frac{R_k \cdot k_{mod}}{\gamma_M}$$

  The coefficients k_{mod} and γ_M should be taken according to the current regulations used for the calculation.

MULTIPLE CONNECTORS

- In case of installation with multiple connectors, it is recommended to install alternate connectors with installation option 1 and installation option 2.
- The strength of the screws in the secondary beam is the sum of the strength of the screws in the individual connectors.
- The calculation of the strength in the main element of a connection consisting of multiple connectors must be carried out by the designer, according to chapters 8.5 and 8.9 EN 1995-1-1:2014.

TIMBER-TO-CONCRETE | TIMBER-TO-STEEL

- The calculation of $R_{v,k\ main}$, $R_{ax,k\ main}$ and $R_{lat,k\ main}$ must be executed by the designer. The calculation of the relative design values must be carried out using the γ_M coefficients to be assumed according to the regulations in force used for the calculation.

INTELLECTUAL PROPERTY

- DISC FLAT connectors are protected by the following Registered Community Designs:
  - RCD 008254353-0003;
  - RCD 008254353-0004.

SIMPLEX

REMOVABLE CONCEALED CONNECTOR

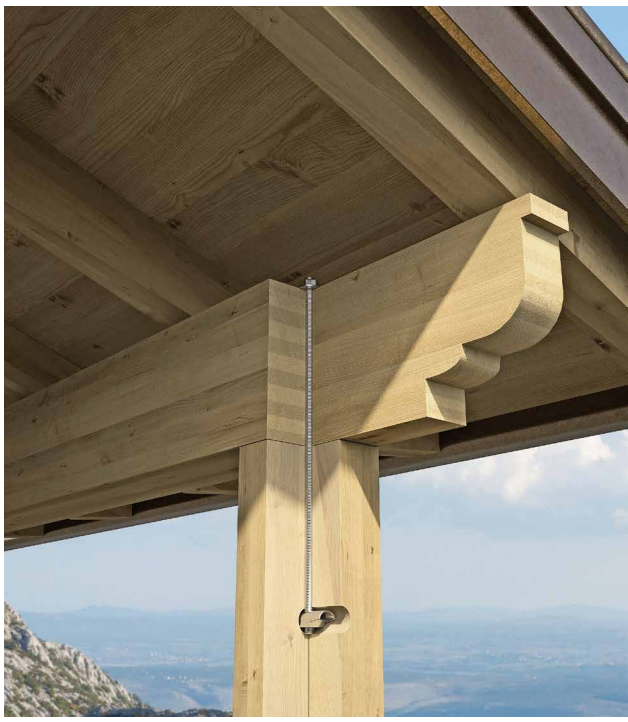

SIMPLE
Ideal for longitudinal and transverse connections in timber subject to tension. Suitable for 12 or 16 mm diameter bolts or threaded rods.

TEMPORARY STRUCTURES
Disassembled by simply unscrewing the bolt. Suitable for temporary structures or those that can be disassembled and reassembled.

CANOPIES AND SHELTERS
For small canopies or shelters, it can be used to create a partial joint between beam and column and stabilise the structure.



SERVICE CLASS	SC1 SC2
MATERIAL	
Zn ELECTRO PLATED	cast iron with zinc plating
EXTERNAL LOADS	

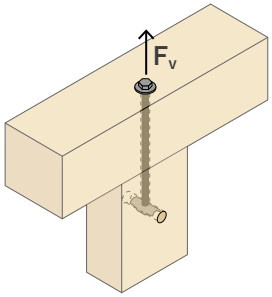



PANEL-PANEL
It can be used in panel-to-panel connections for tension connections and for pulling panels by closing the joint.

CODES AND DIMENSIONS

DIN 1052

CODE	rod	L	P	hole	*L*	*P*	*hole*	pcs
		[mm]	[mm]	[mm]	*[in]*	*[in]*	*[in]*	
SIMPLEX12	**M12**	54	22	24	*2 1/8*	*7/8*	*0.95*	100
SIMPLEX16	**M16**	72	28,5	32	*2 13/16*	*1 1/8*	*1.26*	100

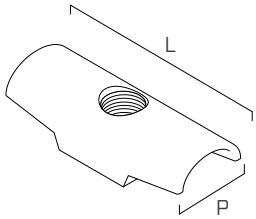

STRUCTURAL VALUES WITH DADO SIMPLEX WITHDRAWAL

BEARING STRESS RESISTANCE OF WOOD

CODE	rod	P	L_{ef}	a(1)	$R_{v,k}$
		[mm]	[mm]	[mm]	[kN]
SIMPLEX12	**M12**	22	32	154	**6,4**
SIMPLEX16	**M16**	28,5	43,5	200	**10,4**

L_{eff} =L-d, with d= rod diameter
(1)a is the minimum distance from the end of the element.

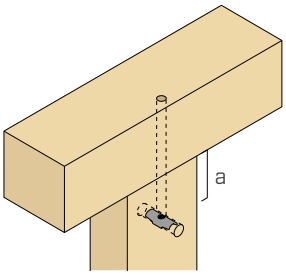

INSTALLATION

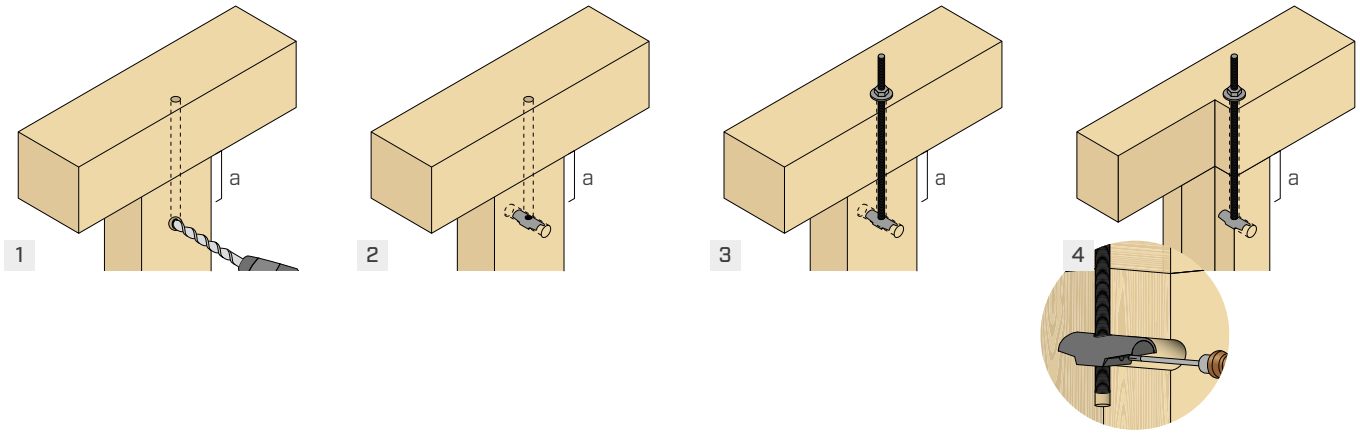

GENERAL PRINCIPLES:

- Characteristic values according to EN 1995-1-1.
- Design values can be obtained from characteristic values as follows:

$$R_{v,d} = \frac{R_{v,k} \cdot k_{mod}}{\gamma_M}$$

The coefficients γ_M and k_{mod} should be taken according to the current regulations used for the calculation.

- A timber density of ρ_k = 350 kg/m^3 was considered for the calculation process.

METAL HANGERS

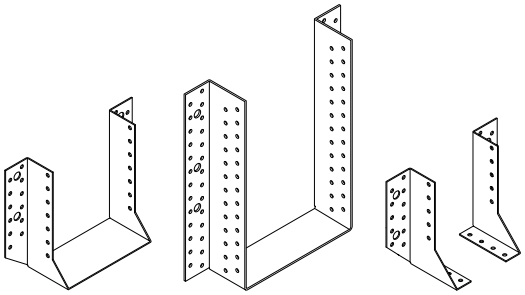

BSAS BSAG BSAD

BSA - hangers with external wings

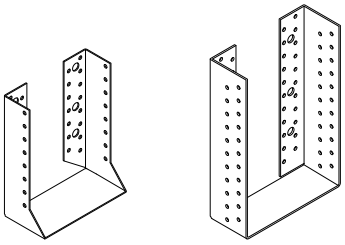

BSIS BSIG

BSI - hangers with internal wings

APPLICATIONS

The strength values achieved depend on the method of installation on-site and the type of support.
The main configurations are:

TIMBER-TO-TIMBER

beam-beam

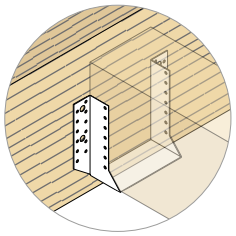

beam-column

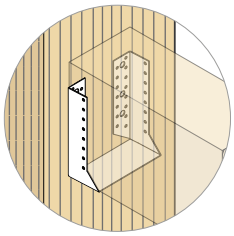

TIMBER-TO-CONCRETE

beam-wall

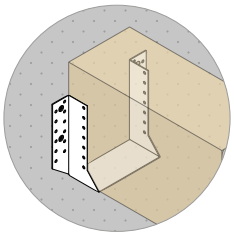

beam-beam

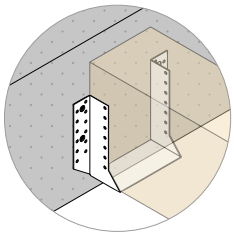

TIMBER-OSB

beam-wall

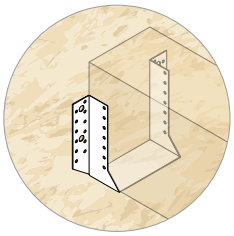

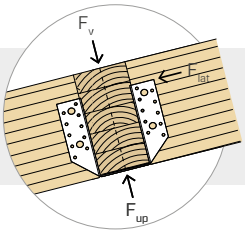

The hanger can be applied to horizontal or inclined beams.
The hanger can be subjected to combined loading.

INSTALLATION - MINIMUM DISTANCES

TIMBER-TO-TIMBER

			nail LBA Ø4	screw LBS Ø5
First connector - top of beam	$a_{4,c}$	[mm]	≥ 5d	≥ 20	≥ 25

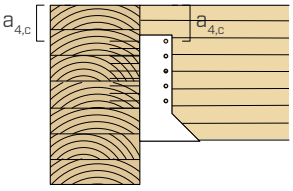

TIMBER-TO-CONCRETE

			VIN-FIX anchor Ø8	Ø10	Ø12
Minimum support thickness	h_{min}	[mm]	h_{ef} + 30 mm ≥ 100		
Concrete hole diameter	d_0	[mm]	10	12	14
Tightening torque	T_{inst}	[Nm]	10	20	40

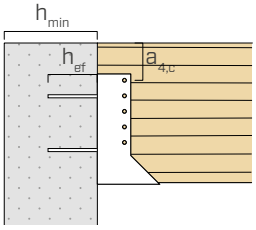

INSTALLATION - FASTENERS

TIMBER-TO-TIMBER

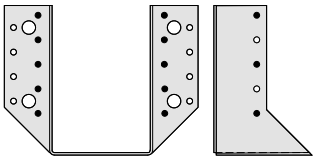

BSAS

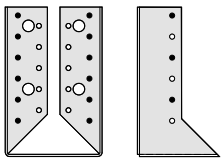

BSIS

	main beam (n_H)	secondary beam (n_J)
PARTIAL NAILING ●	n_H nails positioned on the column closest to the lateral wing of the hanger	n_J nails with alternate pattern
FULL NAILING ● + ○	n_H nails in all the holes	n_J nails in all the holes

TIMBER-TO-TIMBER | large size

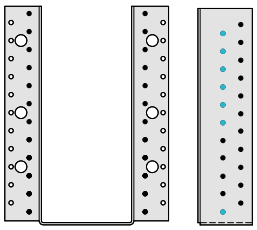

BSAG

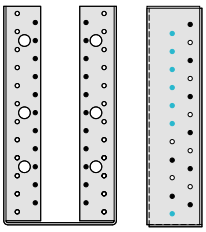

BSIG

	main beam (n_H)	secondary beam (n_J)
PARTIAL NAILING ●	n_H nails positioned on the column closest to the lateral wing of the hanger	(●) nJ nails with alternate pattern, avoiding the holes marked in azure
FULL NAILING ● + ○	n_H nails in all the holes	(●) $n_J$nails with alternate pattern, avoiding the holes marked in azure

TIMBER-TO-CONCRETE

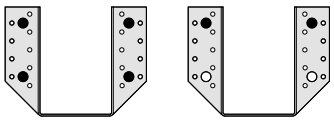

BSAS

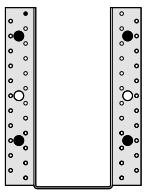

BSAG

	main beam (n_H)	secondary beam (n_J)
FIXING OF THE ANCHORS n_{bolt} ●	the n_{bolt} anchors shall be placed symmetrically with respect to the vertical axis. At least two anchors should be positioned in the top holes	n_J nails positioned according to full nailing patterns as shown above

INSTALLATION - RECOMMENDED DIMENSIONS

SECONDARY BEAM

			nail LBA Ø4	screw LBS Ø5
Secondary beam height	h_{jMIN}	[mm]	H + 12 mm	H + 17 mm
	h_{jMAX}	[mm]	1,5H	

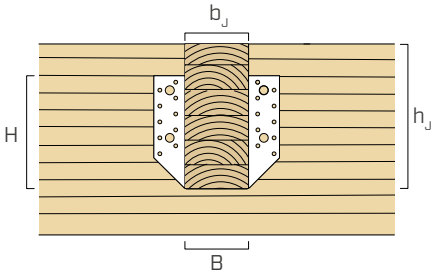

BSA

METAL HANGER WITH EXTERNAL WINGS

CE
ETA

FAST USE
Standardized, certified, fast and inexpensive system.

MIXED MODE BENDING
Suitable for the fasting of joints in mixed mode bending.

WIDE RANGE
More than 50 models to suit all needs, for beam widths from 40 to 200 mm. Strengths of up to 75 kN for use in heavy structural applications on both timber and concrete.

USA, Canada and more design values available online.

SERVICE CLASS SC1 SC2

MATERIAL

S250 Z275 — Z275 bright zinc plated S250GD carbon steel

EXTERNAL LOADS

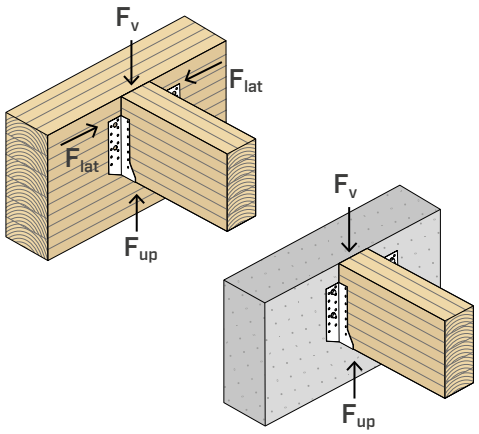



BSAD



BSAS



BSAG



FIELD OF USE

Joints for beams in timber-to-timber or timber-to-concrete configuration, suitable for beams, I-joists and wood trusses.

Can be applied to:
- solid timber softwood and hardwood
- glulam, LVL



WOOD TRUSS

Also ideal for the fastening of TRUSS and RAFTER with small cross-sections. Certified values also allow for the direct fastening of TIMBER STUD to OSB panels.

I-JOIST

Versions homologated for direct fastening on OSB panels, for joining „I" beams and for timber-to-concrete joints.

CODES AND DIMENSIONS

BSAS - smooth

S250 Z275

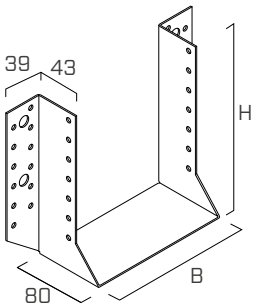

CODE	B [mm]	H [mm]	s [mm]	*B [in]*	*H [in]*	*s [in]*			pcs
BSAS40110	40	110	2,0	*1 9/16*	*4 3/8*	*0.08*	●	●	50
BSAS46117	46	117	2,0	*1 13/16*	*4 5/8*	*0.08*	●	-	50
BSAS46137	46	137	2,0	*1 13/16*	*5 3/8*	*0.08*	●	●	50
BSAS46207	46	207	2,0	*1 13/16*	*8 1/8*	*0.08*	●	-	25
BSAS5070	50	70	2,0	*1 15/16*	*2 3/4*	*0.08*	●	-	50
BSAS51105	51	105	2,0	*2*	*4 1/8*	*0.08*	●	●	50
BSAS51135	51	135	2,0	*2*	*5 5/16*	*0.08*	●	●	50
BSAS60100	60	100	2,0	*2 3/8*	*4*	*0.08*	●	●	50
BSAS64128	64	128	2,0	*2 1/2*	*5 1/16*	*0.08*	●	●	50
BSAS64158	64	158	2,0	*2 1/2*	*6 1/4*	*0.08*	●	●	50
BSAS70125	70	125	2,0	*2 3/4*	*4 15/16*	*0.08*	●	●	50
BSAS70155	70	155	2,0	*2 3/4*	*6 1/8*	*0.08*	●	●	50
BSAS7690	76	90	2,0	*3*	*3 1/2*	*0.08*	●	-	50
BSAS76152	76	152	2,0	*3*	*6*	*0.08*	●	●	50
BSAS80120	80	120	2,0	*3 1/8*	*4 3/4*	*0.08*	●	●	50
BSAS80140	80	140	2,0	*3 1/8*	*5 1/2*	*0.08*	●	●	50
BSAS80150	80	150	2,0	*3 1/8*	*6*	*0.08*	●	●	50
BSAS80180	80	180	2,0	*3 1/8*	*7 1/8*	*0.08*	●	●	25
BSAS80210	80	210	2,0	*3 1/8*	*8 1/4*	*0.08*	●	●	50
BSAS90145	90	145	2,0	*3 1/2*	*5 11/16*	*0.08*	●	●	50
BSAS92184	92	184	2,0	*3 5/8*	*7 1/4*	*0.08*	●	-	25
BSAS10090	100	90	2,0	*4*	*3 1/2*	*0.08*	●	-	50
BSAS100120	100	120	2,0	*4*	*4 3/4*	*0.08*	●	-	50
BSAS100140	100	140	2,0	*4*	*5 1/2*	*0.08*	●	●	50
BSAS100160	100	160	2,0	*4*	*6 1/4*	*0.08*	●	-	50
BSAS100170	100	170	2,0	*4*	*6 3/4*	*0.08*	●	●	25
BSAS100200	100	200	2,0	*4*	*8*	*0.08*	●	●	25
BSAS120120	120	120	2,0	*4 3/4*	*4 3/4*	*0.08*	●	●	25
BSAS120160	120	160	2,0	*4 3/4*	*6 1/4*	*0.08*	●	●	50
BSAS120190	120	190	2,0	*4 3/4*	*7 1/2*	*0.08*	●	●	25
BSAS140140	140	140	2,0	*5 1/2*	*5 1/2*	*0.08*	●	●	25
BSAS140160	140	160	2,0	*5 1/2*	*6 1/4*	*0.08*	●	-	25
BSAS140180	140	180	2,0	*5 1/2*	*7 1/8*	*0.08*	●	●	25

BSAD - 2 pieces

S250 Z275

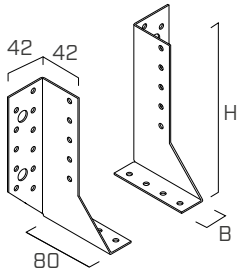

CODE	B [mm]	H [mm]	s [mm]	*B [in]*	*H [in]*	*s [in]*			pcs
BSAD25100	25	100	2,0	*1*	*4*	*0.08*	●	-	25
BSAD25140	25	140	2,0	*1*	*5 1/2*	*0.08*	●	-	25
BSAD25180	25	180	2,0	*1*	*7 1/8*	*0.08*	●	-	25

CODES AND DIMENSIONS

BSAG - large size

CODE	B [mm]	H [mm]	s [mm]	*B [in]*	*H [in]*	*s [in]*			pcs
BSAG100240	100	240	2,5	*4*	*9 1/2*	*0.10*	●	●	20
BSAG100280	100	280	2,5	*4*	*11*	*0.10*	●	●	20
BSAG120240	120	240	2,5	*4 3/4*	*9 1/2*	*0.10*	●	●	20
BSAG120280	120	280	2,5	*4 3/4*	*11*	*0.10*	●	●	20
BSAG140240	140	240	2,5	*5 1/2*	*9 1/2*	*0.10*	●	●	20
BSAG140280	140	280	2,5	*5 1/2*	*11*	*0.10*	●	●	20
BSAG160160	160	160	2,5	*6 1/4*	*6 1/4*	*0.10*	●	●	15
BSAG160200	160	200	2,5	*6 1/4*	*8*	*0.10*	●	●	15
BSAG160240	160	240	2,5	*6 1/4*	*9 1/2*	*0.10*	●	●	15
BSAG160280	160	280	2,5	*6 1/4*	*11*	*0.10*	●	●	15
BSAG160320	160	320	2,5	*6 1/4*	*12 5/8*	*0.10*	●	●	15
BSAG180220	180	220	2,5	*7 1/8*	*8 5/8*	*0.10*	●	●	10
BSAG180280	180	280	2,5	*7 1/8*	*11*	*0.10*	●	●	10
BSAG200200	200	200	2,5	*8*	*8*	*0.10*	●	●	10
BSAG200240	200	240	2,5	*8*	*9 1/2*	*0.10*	●	●	10

S250
Z275

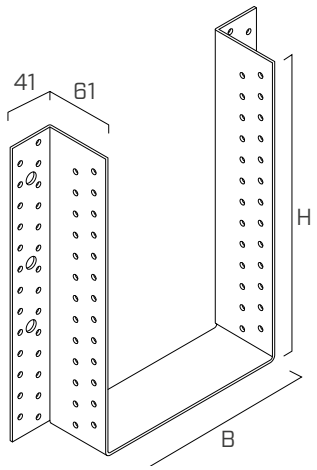

ADDITIONAL PRODUCTS - FASTENING

type	description		d [mm]	support	page
LBA	high bond nail		4		570
LBS	round head screw		5		571
AB1	CE1 expansion anchor		M8 - M10 -M12		536
VIN-FIX	vinyl ester chemical anchor		M8 - M10 -M12		545
HYB-FIX	hybrid chemical anchor	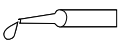	M8 - M10 -M12		552

STRUCTURAL VALUES | TIMBER-TO-TIMBER | F_v | F_{lat}

PARTIAL/TOTAL NAILING[1]

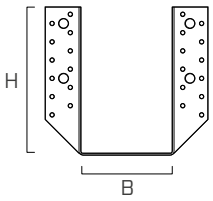

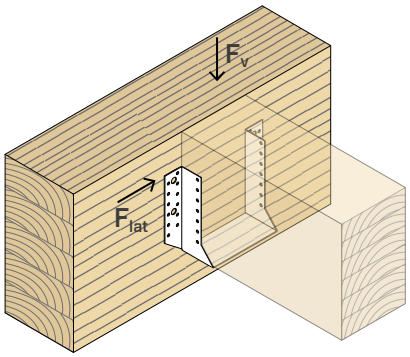

BSAS - SMOOTH			PARTIAL NAILING				FULL NAILING			
			fastening number		characteristic values		fastening number		characteristic values	
B	H	LBA nails	n_H[2]	n_J[3]	$R_{v,k}$	$R_{lat,k}$	n_H[2]	n_J[3]	$R_{v,k}$	$R_{lat,k}$
[mm]	[mm]	d x L [mm]	[pcs]	[pcs]	[kN]	[kN]	[pcs]	[pcs]	[kN]	[kN]
40 *	110	Ø4 x 40	8	4	**8,7**	**1,9**	-	-	**-**	**-**
46 *	117	Ø4 x 40	8	4	**9,0**	**2,1**	-	-	**-**	**-**
46 *	137	Ø4 x 40	10	6	**11,8**	**2,4**	-	-	**-**	**-**
46 *	207	Ø4 x 40	14	8	**16,9**	**2,9**	-	-	**-**	**-**
50 *	70	Ø4 x 40	4	2	**3,6**	**1,3**	-	-	**-**	**-**
51 *	105	Ø4 x 40	8	4	**8,1**	**2,3**	-	-	**-**	**-**
51 *	135	Ø4 x 40	10	6	**11,5**	**2,6**	-	-	**-**	**-**
60	100	Ø4 x 40	8	4	**7,6**	**2,6**	14	8	**13,0**	**4,9**
64	128	Ø4 x 40	10	6	**10,9**	**3,6**	18	10	**19,2**	**5,9**
64	158	Ø4 x 40	12	6	**15,0**	**3,6**	22	12	**26,3**	**6,7**
70	125	Ø4 x 40	10	6	**10,5**	**3,7**	18	10	**18,6**	**6,2**
70	155	Ø4 x 40	12	6	**15,0**	**3,8**	22	12	**26,3**	**7,1**
76	90	Ø4 x 40	6	4	**5,9**	**2,9**	12	6	**10,4**	**4,4**
76	152	Ø4 x 40	12	6	**15,0**	**3,9**	22	12	**26,3**	**7,4**
80	120	Ø4 x 40	10	6	**9,9**	**4,0**	18	10	**17,5**	**6,6**
80	140	Ø4 x 40	10	6	**12,3**	**4,0**	20	10	**22,5**	**6,7**
80	150	Ø4 x 40	12	6	**14,8**	**4,0**	22	12	**26,3**	**7,6**
80	180	Ø4 x 40	14	8	**18,8**	**4,8**	26	14	**30,0**	**8,4**
80	210	Ø4 x 40	16	8	**18,8**	**4,8**	30	16	**33,8**	**9,1**
90	145	Ø4 x 40	12	6	**14,2**	**4,2**	22	12	**25,7**	**8,0**
92	184	Ø4 x 40	14	8	**18,8**	**5,2**	26	14	**30,0**	**9,0**
100	90	Ø4 x 60	6	4	**8,7**	**4,8**	12	6	**15,2**	**7,2**
100	120	Ø4 x 60	10	6	**15,3**	**7,0**	18	10	**27,1**	**11,7**
100	140	Ø4 x 60	12	6	**18,9**	**6,5**	22	12	**33,1**	**12,3**
100	160	Ø4 x 60	12	6	**18,9**	**6,5**	22	12	**33,1**	**12,3**
100	170	Ø4 x 60	14	8	**23,6**	**7,7**	26	14	**37,8**	**13,5**
100	200	Ø4 x 60	16	8	**23,6**	**7,7**	30	16	**42,5**	**14,6**
120	120	Ø4 x 60	10	6	**15,3**	**7,0**	18	10	**27,1**	**11,7**
120	160	Ø4 x 60	14	8	**23,6**	**8,5**	26	14	**37,8**	**14,9**
120	190	Ø4 x 60	16	8	**23,6**	**8,5**	30	16	**42,5**	**16,2**
140	140	Ø4 x 60	12	6	**18,9**	**7,4**	22	12	**33,1**	**14,3**
140	160	Ø4 x 60	14	8	**23,6**	**9,1**	26	14	**37,8**	**16,0**
140	180	Ø4 x 60	16	8	**23,6**	**9,1**	30	16	**42,5**	**17,5**

* It cannot be to completely nailed.

STRUCTURAL VALUES | TIMBER-TO-TIMBER | F_v | F_{lat}

PARTIAL/TOTAL NAILING[1]

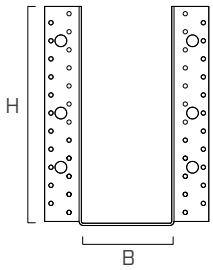

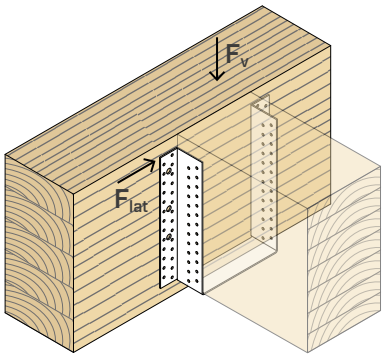

BSAG - LARGE SIZE			PARTIAL NAILING				FULL NAILING			
			fastening number		characteristic values		fastening number		characteristic values	
B	H	LBA nails	n_H[2]	n_J[3]	$R_{v,k}$	$R_{lat,k}$	n_H[2]	n_J[3]	$R_{v,k}$	$R_{lat,k}$
[mm]	[mm]	d x L [mm]	[pcs]	[pcs]	[kN]	[kN]	[pcs]	[pcs]	[kN]	[kN]
100	240	Ø4 x 60	24	16	**40,7**	**10,7**	46	30	**75,6**	**19,9**
100	280	Ø4 x 60	28	18	**47,3**	**10,8**	54	34	**85,1**	**20,3**
120	240	Ø4 x 60	24	16	**40,7**	**12,3**	46	30	**75,6**	**22,9**
120	280	Ø4 x 60	28	18	**47,3**	**12,6**	54	34	**85,1**	**23,5**
140	240	Ø4 x 60	24	16	**40,7**	**13,7**	46	30	**75,6**	**25,6**
140	280	Ø4 x 60	28	18	**47,3**	**14,1**	54	34	**85,1**	**26,4**
160	160	Ø4 x 60	16	10	**21,2**	**11,1**	30	18	**41,6**	**19,9**
160	200	Ø4 x 60	20	12	**30,7**	**12,3**	38	22	**56,7**	**22,4**
160	240	Ø4 x 60	24	16	**40,7**	**15,0**	46	30	**75,6**	**27,9**
160	280	Ø4 x 60	28	18	**47,3**	**15,5**	54	34	**85,1**	**29,0**
160	320	Ø4 x 60	32	20	**52,0**	**15,9**	62	38	**94,6**	**30,0**
180	220	Ø4 x 60	22	14	**35,7**	**15,2**	42	26	**66,2**	**27,0**
180	280	Ø4 x 60	28	18	**47,3**	**16,7**	54	34	**85,1**	**31,3**
200	200	Ø4 x 60	20	12	**30,7**	**13,7**	38	22	**56,7**	**25,0**
200	240	Ø4 x 60	24	16	**40,7**	**16,9**	46	30	**75,6**	**31,3**

NOTES

(1) For total or partial nailing patterns please refer to the guidelines reported at p. 150.

(2) n_H = number of fasteners on the main beam.

(3) n_J = number of fasteners on the secondary beam.

GENERAL PRINCIPLES

- Characteristic values are consistent with EN 1995:2014 and in accordance with ETA.
- Design values can be obtained from characteristic values as follows:

$$R_d = \frac{R_k \cdot k_{mod}}{\gamma_M}$$

  The coefficients k_{mod} and γ_M should be taken according to the current regulations used for the calculation.
- A timber density of ρ_k = 350 kg/m^3 was considered for the calculation process.
- Dimensioning and verification of the timber elements must be carried out separately.
- In case of F_v parallel to the grain, partial nailing is required.
- The following verification shall be satisfied for combined loading:

$$\left(\frac{F_{v,d}}{R_{v,d}}\right)^2 + \left(\frac{F_{lat,d}}{R_{lat,d}}\right)^2 \leq 1$$

STRUCTURAL VALUES | TIMBER-TO-CONCRETE | F_V

CHEMICAL ANCHOR[1]

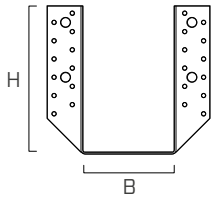

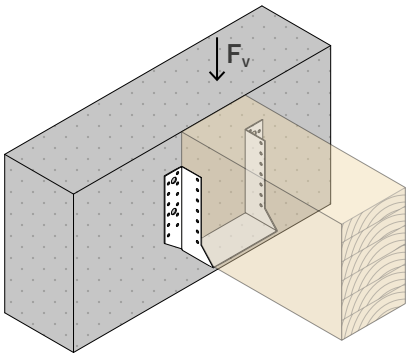

BSAS - SMOOTH		FASTENERS		CHARACTERISTIC VALUES	
B	**H**	**anchor VIN-FIX[2]**	**nails LBA**	**$R_{v,k\ timber}$**	**$R_{v,k\ steel}$**
[mm]	[mm]	[n_{bolt} - Ø x L] [3]	[n_J - Ø x L] [4]	[kN]	[kN]
40 *	110	2 - M8 x 110	4 - Ø4 x 40	**11,3**	**10,6**
46 *	137	2 - M10 x 110	6 - Ø4 x 40	**15,0**	**13,2**
51 *	105	2 - M8 x 110	4 - Ø4 x 40	**11,3**	**10,6**
51 *	135	2 - M10 x 110	6 - Ø4 x 40	**15,0**	**13,2**
60	100	2 - M8 x 110	8 - Ø4 x 40	**18,8**	**10,6**
64	128	4 - M10 x 110	10 - Ø4 x 40	**22,5**	**26,4**
64	158	4 - M10 x 110	12 - Ø4 x 40	**26,3**	**26,4**
70	125	4 - M10 x 110	10 - Ø4 x 40	**22,5**	**26,4**
70	155	4 - M10 x 110	12 - Ø4 x 40	**26,3**	**26,4**
76	152	4 - M10 x 110	12 - Ø4 x 40	**26,3**	**26,4**
80	120	4 - M10 x 110	10 - Ø4 x 40	**22,5**	**26,4**
80	140	4 - M10 x 110	10 - Ø4 x 40	**22,5**	**26,4**
80	150	4 - M10 x 110	12 - Ø4 x 40	**26,3**	**26,4**
80	180	4 - M10 x 110	14 - Ø4 x 40	**30,0**	**26,4**
80	210	4 - M10 x 110	16 - Ø4 x 40	**33,8**	**26,4**
90	145	4 - M10 x 110	12 - Ø4 x 40	**26,3**	**26,4**
100	140	4 - M10 x 110	12 - Ø4 x 60	**33,1**	**26,4**
100	170	4 - M10 x 110	14 - Ø4 x 60	**37,8**	**26,4**
100	200	4 - M10 x 110	16 - Ø4 x 60	**42,6**	**26,4**
120	120	4 - M10 x 110	10 - Ø4 x 60	**28,4**	**26,4**
120	160	4 - M10 x 110	14 - Ø4 x 60	**37,8**	**26,4**
120	190	4 - M10 x 110	16 - Ø4 x 60	**42,6**	**26,4**
140	140	2 - M10 x 110	12 - Ø4 x 60	**33,1**	**13,2**
140	180	4 - M10 x 110	16 - Ø4 x 60	**42,6**	**26,4**

* Partial nailing.

STRUCTURAL VALUES | TIMBER-TO-CONCRETE | F_V

CHEMICAL ANCHOR[1]

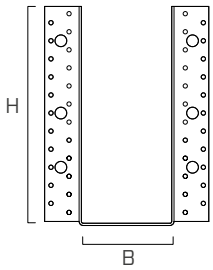

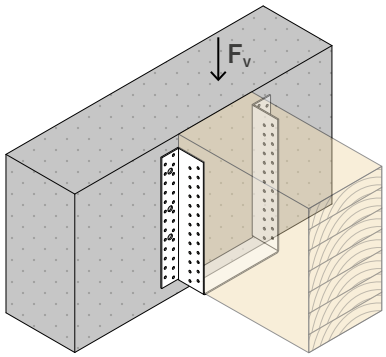

BSAG - LARGE SIZE		FASTENERS		CHARACTERISTIC VALUES	
B	**H**	**anchor VIN-FIX[2]**	**nails LBA**	**$R_{v,k\ timber}$**	**$R_{v,k\ steel}$**
[mm]	[mm]	[n_{bolt} - Ø x L] [3]	[n_J - Ø x L] [4]	[kN]	[kN]
100	240	6 - M12 x 130	30 - Ø4 x 60	**75,6**	**59,4**
100	280	6 - M12 x 130	34 - Ø4 x 60	**85,1**	**59,4**
120	240	6 - M12 x 130	30 - Ø4 x 60	**75,6**	**59,4**
120	280	6 - M12 x 130	34 - Ø4 x 60	**85,1**	**59,4**
140	240	6 - M12 x 130	30 - Ø4 x 60	**75,6**	**59,4**
140	280	6 - M12 x 130	34 - Ø4 x 60	**85,1**	**59,4**
160	160	4 - M12 x 130	18 - Ø4 x 60	**47,3**	**39,6**
160	200	6 - M12 x 130	22 - Ø4 x 60	**56,7**	**59,4**
160	240	6 - M12 x 130	30 - Ø4 x 60	**75,6**	**59,4**
160	280	6 - M12 x 130	34 - Ø4 x 60	**85,1**	**59,4**
160	320	6 - M12 x 130	38 - Ø4 x 60	**94,6**	**59,4**
180	220	6 - M12 x 130	26 - Ø4 x 60	**66,2**	**59,4**
180	280	6 - M12 x 130	34 - Ø4 x 60	**85,1**	**59,4**
200	200	6 - M12 x 130	22 - Ø4 x 60	**56,7**	**59,4**
200	240	6 - M12 x 130	30 - Ø4 x 60	**75,6**	**59,4**

NOTES

(1) For fixing on the concrete the two top holes must always be fixed and the anchors shall be positioned symmetrically with respect to the vertical axis of the hanger.

(2) Chemical anchor VIN-FIX with threaded rods (type INA) of minimum strength grade equal to 5.8. with $h_{ef} \geq 8d$.

(3) n_{bolt} = number of anchors on the concrete support.

(4) n_J = number of fasteners on the secondary beam.

GENERAL PRINCIPLES

- Characteristic values are consistent with EN 1995:2014 and in accordance with ETA.
- The connection design strength is the minimum between the design strength pertaining to the timber side ($R_{v,d\ timber}$) and the design strength of the steel part ($R_{v,d\ steel}$):

$$R_{v,d} = min \begin{cases} \frac{R_{v,k\ timber} \cdot k_{mod}}{\gamma_M} \\ \frac{R_{v,k\ steel}}{\gamma_{M2}} \end{cases}$$

  The coefficients k_{mod}, γ_M and γ_{M2} should be taken according to the current regulations used for the calculation.
- A timber density of ρ_k = 350 kg/m^3 was considered for the calculation process.
- Dimensioning and verification of timber and concrete elements must be carried out separately.
- The strength values of the connection system are valid under the calculation hypothesis listed in the table.

BSI

METAL HANGER WITH INTERNAL WINGS

CE
ETA

FAST USE
Standardized, certified, fast and inexpensive system. Thanks to the internal wings, the junction is almost entirely concealed.

MIXED MODE BENDING
Suitable for the fastening of joints in mixed mode bending.

WIDE RANGE
Suitable for beams with width from 40 to 200 mm. Strengths of up to 75 kN for use in heavy structural applications on both timber and concrete.

USA, Canada and more design values available online.

SERVICE CLASS SC1 SC2

MATERIAL

S250 Z275 Z275 bright zinc plated S250GD carbon steel

EXTERNAL LOADS

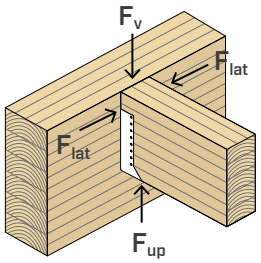



BSIS



BSIG

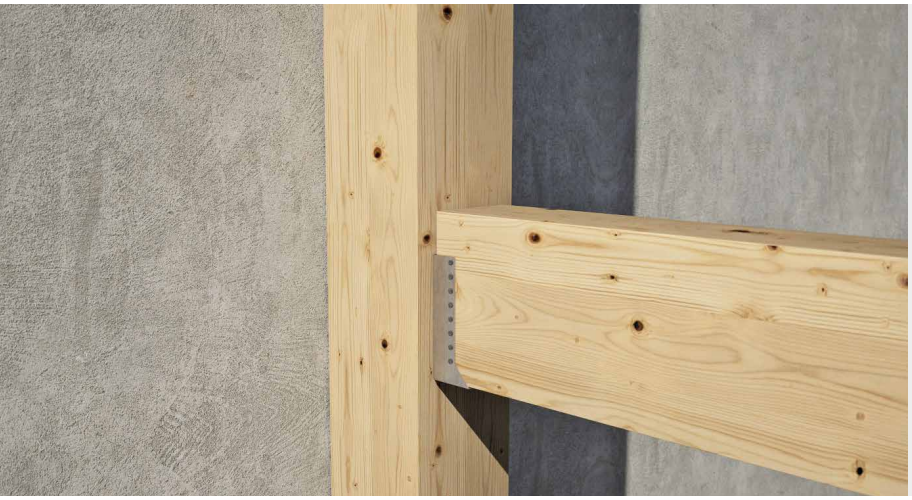

FIELD OF USE
Beam joint in timber-to-timber configuration, suitable for beams in floors and roofs.

Can be applied to:
- solid timber softwood and hardwood
- glulam, LVL

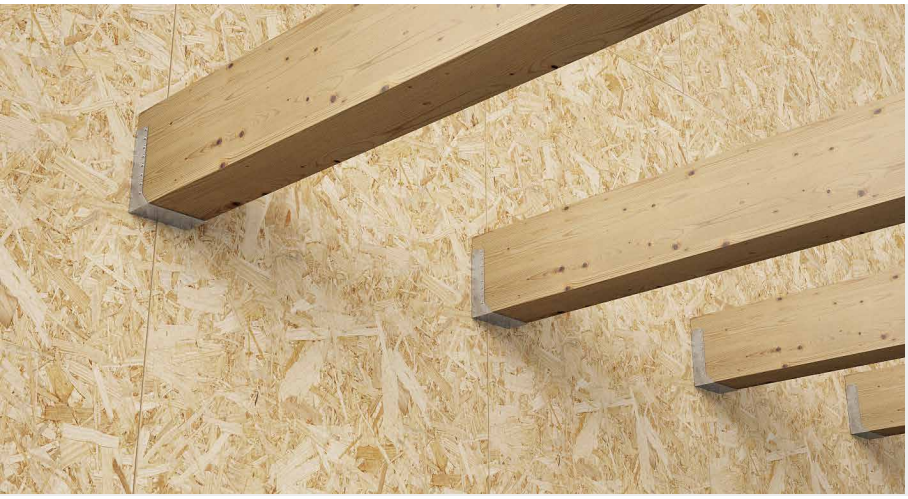

CONCEALED

Thanks to the internal wings, the junction is almost entirely concealed. Additionally, the distribution of the nailing on the secondary beam makes the system light, highly effective and relatively inexpensive.

LARGE SCALE STRUCTURES

A quick and economical system, it offers a method for the fastening of large size beams using hangers with a minimal thickness.

CODES AND DIMENSIONS

BSIS - smooth

S250 Z275

CODE	B [mm]	H [mm]	s [mm]	*B [in]*	*H [in]*	*s [in]*			pcs
BSIS40110	40	110	2,0	*1 9/16*	*4 3/8*	*0.08*	●	-	50
BSIS60100	60	100	2,0	*2 3/8*	*4*	*0.08*	●	-	50
BSIS60160	60	160	2,0	*2 3/8*	*6 1/4*	*0.08*	●	-	50
BSIS70125	70	125	2,0	*2 3/4*	*4 15/16*	*0.08*	●	-	50
BSIS80120	80	120	2,0	*3 1/8*	*4 3/4*	*0.08*	●	-	50
BSIS80150	80	150	2,0	*3 1/8*	*6*	*0.08*	●	-	50
BSIS80180	80	180	2,0	*3 1/8*	*7 1/8*	*0.08*	●	-	25
BSIS90145	90	145	2,0	*3 1/2*	*5 11/16*	*0.08*	●	-	50
BSIS10090	100	90	2,0	*4*	*3 1/2*	*0.08*	●	-	50
BSIS100120	100	120	2,0	*4*	*4 3/4*	*0.08*	●	-	50
BSIS100140	100	140	2,0	*4*	*5 1/2*	*0.08*	●	-	50
BSIS100170	100	170	2,0	*4*	*6 3/4*	*0.08*	●	-	50
BSIS100200	100	200	2,0	*4*	*8*	*0.08*	●	-	25
BSIS120120	120	120	2,0	*4 3/4*	*4 3/4*	*0.08*	●	-	25
BSIS120160	120	160	2,0	*4 3/4*	*6 1/4*	*0.08*	●	-	25
BSIS120190	120	190	2,0	*4 3/4*	*7 1/2*	*0.08*	●	-	25
BSIS140140	140	140	2,0	*5 1/2*	*5 1/2*	*0.08*	●	-	25
BSIS140180	140	180	2,0	*5 1/2*	*7 1/8*	*0.08*	●	-	25

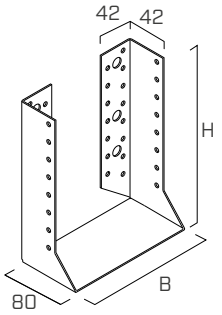

BSIG - large size

S250 Z275

CODE	B [mm]	H [mm]	s [mm]	*B [in]*	*H [in]*	*s [in]*			pcs
BSIG120240	120	240	2,5	*4 3/4*	*9 1/2*	*0.10*	●	-	20
BSIG140240	140	240	2,5	*5 1/2*	*9 1/2*	*0.10*	●	-	20
BSIG160160	160	160	2,5	*6 1/4*	*6 1/4*	*0.10*	●	-	15
BSIG160200	160	200	2,5	*6 1/4*	*8*	*0.10*	●	-	15
BSIG180220	180	220	2,5	*7 1/8*	*8 5/8*	*0.10*	●	-	10
BSIG200200	200	200	2,5	*8*	*8*	*0.10*	●	-	10
BSIG200240	200	240	2,5	*8*	*9 1/2*	*0.10*	●	-	10

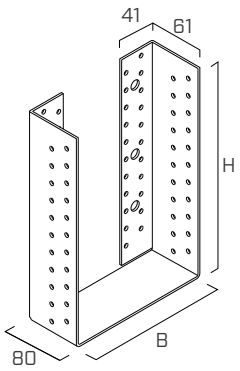

ADDITIONAL PRODUCTS - FASTENING

type	description		d [mm]	support	page
LBA	high bond nail		4		570
LBS	round head screw		5		571

GENERAL PRINCIPLES

- Characteristic values are consistent with EN 1995:2014 and in accordance with ETA.
- Design values can be obtained from characteristic values as follows:

$$R_d = \frac{R_k \cdot k_{mod}}{\gamma_M}$$

The coefficients k_{mod} and γ_M should be taken according to the current regulations used for the calculation.

- A timber density of ρ_k = 350 kg/m^3 was considered for the calculation process.
- Dimensioning and verification of the timber elements must be carried out separately.
- In case of F_v parallel to the grain, partial nailing is required.
- The following verification shall be satisfied for combined loading:

$$\left(\frac{F_{v,d}}{R_{v,d}}\right)^2 + \left(\frac{F_{lat,d}}{R_{lat,d}}\right)^2 \leq 1$$

STRUCTURAL VALUES | TIMBER-TO-TIMBER | F_v | F_{lat}

PARTIAL/TOTAL NAILING[1]

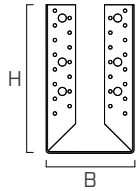

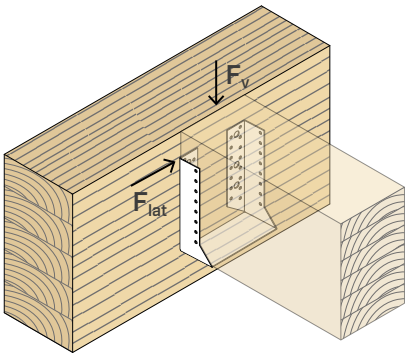

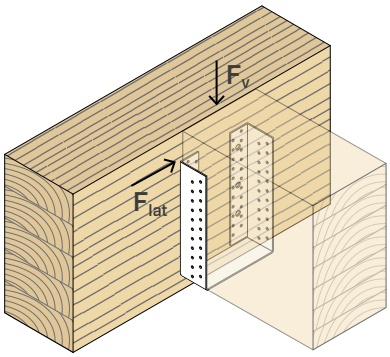

BSIS - SMOOTH

			PARTIAL NAILING				FULL NAILING			
			fastening number		characteristic values		fastening number		characteristic values	
B	H	LBA nails	n_H[2]	n_J[3]	$R_{v,k}$	$R_{lat,k}$	n_H[2]	n_J[3]	$R_{v,k}$	$R_{lat,k}$
[mm]	[mm]	d x L [mm]	pcs	pcs	[kN]	[kN]	pcs	pcs	[kN]	[kN]
40 *	110	Ø4 x 40	8	4	**8,7**	**1,9**	-	-	**-**	-
60 *	100	Ø4 x 40	8	4	**7,6**	**2,6**	-	-	**-**	-
60 *	160	Ø4 x 40	12	6	**15,0**	**3,4**	-	-	**-**	-
70 *	125	Ø4 x 40	10	6	**10,5**	**3,7**	-	-	**-**	-
80	120	Ø4 x 40	10	6	**10,4**	**4,0**	18	10	**18,3**	6,7
80	150	Ø4 x 40	12	6	**14,8**	**4,0**	22	12	**26,3**	7,6
80	180	Ø4 x 40	14	8	**12,8**	**4,8**	26	14	**30,0**	8,4
90	145	Ø4 x 40	12	6	**14,2**	**4,2**	22	12	**25,7**	8,0
100	90	Ø4 x 60	6	4	**8,7**	**4,8**	12	6	**16,8**	7,2
100	120	Ø4 x 60	10	6	**16,5**	**7,7**	16	10	**28,4**	12,5
100	140	Ø4 x 60	12	6	**18,9**	**6,5**	22	12	**33,1**	12,3
100	170	Ø4 x 60	14	8	**23,6**	**7,7**	26	14	**37,8**	13,5
100	200	Ø4 x 60	16	8	**23,6**	**7,7**	30	16	**42,5**	14,6
120	120	Ø4 x 60	10	6	**15,6**	**7,0**	18	10	**27,5**	11,7
120	160	Ø4 x 60	14	8	**23,6**	**8,5**	26	14	**37,8**	14,9
120	190	Ø4 x 60	16	8	**23,6**	**8,5**	30	16	**42,5**	16,2
140	140	Ø4 x 60	12	6	**18,9**	**7,4**	22	12	**33,1**	14,3
140	180	Ø4 x 60	16	8	**23,6**	**9,1**	30	16	**42,5**	17,5

* It cannot be to completely nailed.

BSIG - LARGE SIZE

			PARTIAL NAILING				FULL NAILING			
			fastening number		characteristic values		fastening number		characteristic values	
B	H	LBA nails	n_H[2]	n_J[3]	$R_{v,k}$	$R_{lat,k}$	n_H[2]	n_J[3]	$R_{v,k}$	$R_{lat,k}$
[mm]	[mm]	d x L [mm]	pcs	pcs	[kN]	[kN]	pcs	pcs	[kN]	[kN]
120	240	Ø4 x 60	24	16	**40,7**	**12,3**	46	30	**75,6**	22,9
140	240	Ø4 x 60	24	16	**40,7**	**13,3**	46	30	**75,6**	25,6
160	160	Ø4 x 60	16	10	**21,2**	**11,1**	30	18	**41,6**	19,9
160	200	Ø4 x 60	20	12	**30,7**	**12,3**	38	22	**56,7**	22,4
180	220	Ø4 x 60	22	14	**35,7**	**15,2**	42	26	**66,2**	27,0
200	200	Ø4 x 60	20	12	**30,7**	**13,7**	38	22	**56,7**	25,0
200	240	Ø4 x 60	24	16	**40,7**	**16,9**	46	30	**75,6**	31,6

NOTES

(1) For total or partial nailing patterns please refer to the guidelines reported at p. 150.

(2) n_H = number of fasteners on the main beam.

(3) n_J = number of fasteners on the secondary beam.

XEPOX®

TWO COMPONENTS EPOXY ADHESIVE

VIDEO

CALCULATION TOOL

EN 1504-4

RELIABLE

Proven effectiveness evidenced by 35 years of use in timber construction. Available in 400 ml cartridges for practical and fast use, in 3 litre and 5 litre sizes for larger volume joints.

HIGH PERFORMANCE

High-performance two-components epoxy adhesive. It allows connections with a stiffness unmatched by mechanical connection systems.

DAILY USE

Also suitable for everyday use, such as for repairs, filling holes or restoring damaged portions of timber.

USA, Canada and more design values available online.

SIZES

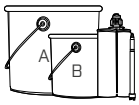

in 3 and 5 litre drums or 400 ml cartridges

APPLICATION

applicable by spray, brush, percolation or spatula depending on viscosity

VIDEO

Scan the QR Code and watch the video on our YouTube channel





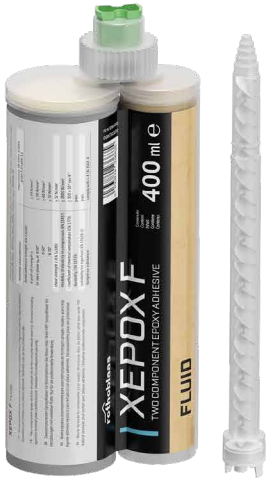

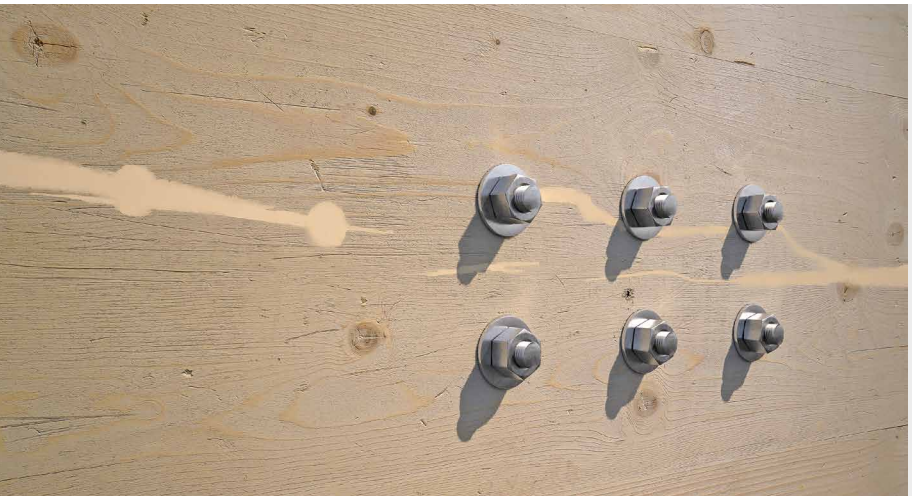

FIELDS OF USE

Glued joints for panels, beams, columns, tie rods and studs.
Application with glued rods.
Application with glued plates for rigid shear, moment and axial action joints.
Repair or consolidation of damaged timber elements.

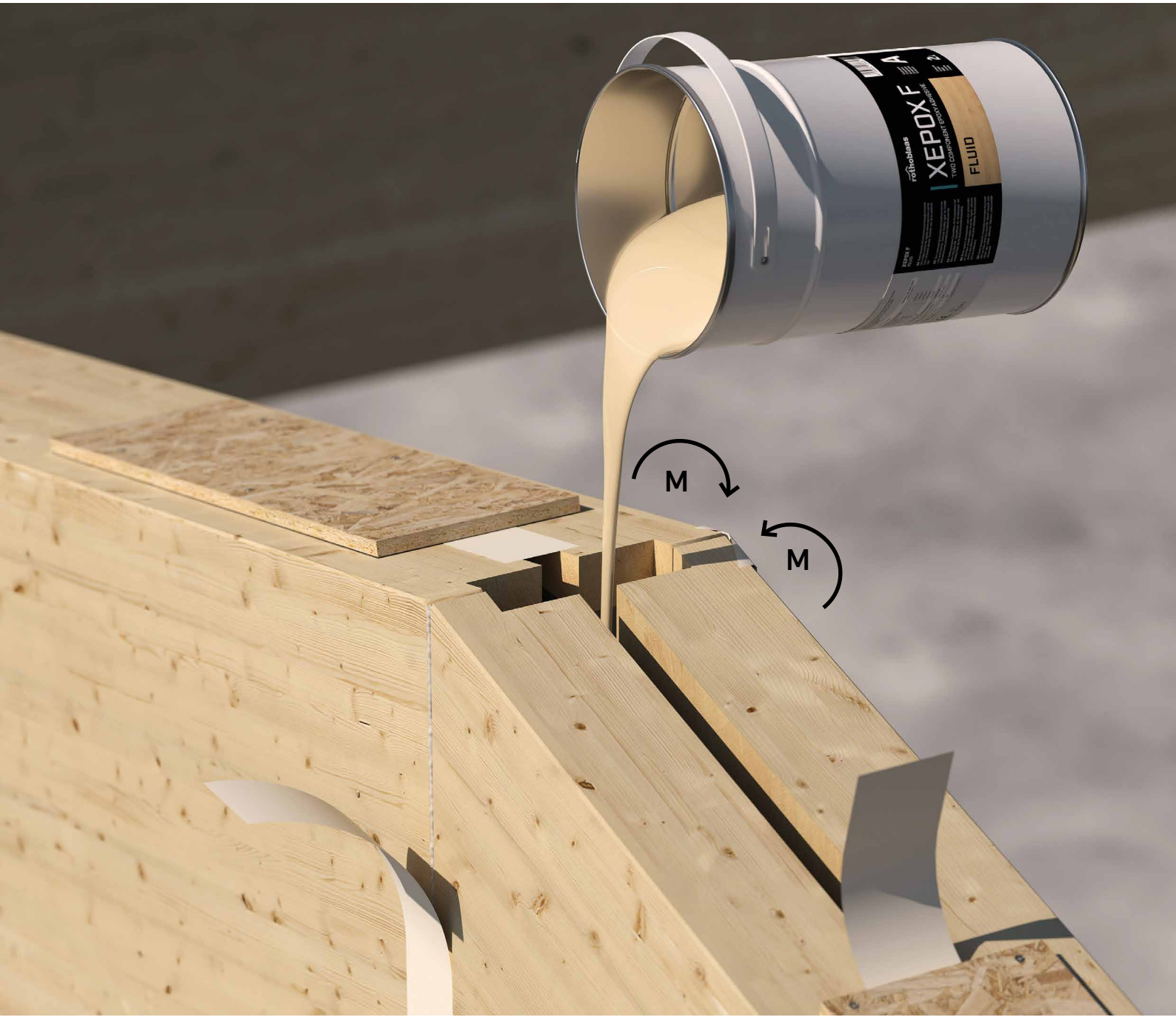



STRUCTURAL

Excellent for the construction of multi-directional rigid joints, with glued plates or rods.

STATIC CONSOLIDATION

Can be used to rebuild "timber material" in combination with metal rods and other materials.

CODES AND DIMENSIONS

XEPOX P - primer

Two-component epoxy adhesive with extremely low viscosity and high wetting properties for carbon or glass fibre structural reinforcements. Useful to protect sanded metal sheets SA2,5/SA3 (ISO 8501) and to realize FRP (Fiber Reinforced Polymers) bits. Applicable by roller, spray and brush.

CODE	description	content		package	pcs
		[ml]	*[US fl oz]*		
XEPOXP3000	P - primer	A + B = 3000	*A+B = 101.44*	drums	1

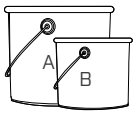

Component A classification: Eye Irrit. 2; Skin Irrit. 2; Skin Sens. 1; Aquatic Chronic 2; Component classification B: Acute Tox. 4; Skin Corr. 1B; Eye Dam. 1; Skin Sens. 1; Aquatic Chronic 3.

XEPOX L - liquid

Two-components epoxy adhesive for structural usage, very fluid, applicable via pouring into very deep vertical holes and suitable for joints with hidden bits placed in quite extended grooves, also good in case of reduced spacing (1mm or more), provided that the slots are accurately sealed. Pourable and injectable.

CODE	description	content		package	pcs
		[ml]	*[US fl oz]*		
XEPOXL3000	L - liquid	A + B = 3000	*A+B = 101.44*	drums	1
XEPOXL5000	L - liquid	A + B = 5000	*A+B = 169.07*	drums	1

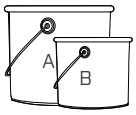

Component A classification: Eye Irrit. 2; Skin Irrit. 2; Skin Sens. 1; Aquatic Chronic 2; Component classification B: Repr. 1B; Acute Tox. 4; STOT RE 2; Skin Corr. 1B; Eye Dam. 1; Skin Sens. 1.

XEPOX F - fluid

Two-components epoxy adhesive for structural usage, applicable via injection into holes and grooves, provided that the slots are accurately sealed. Ideal for binding timber connectors bent (Turrini-Piazza method) into timber-concrete composite floors, on both new and existing beams; gaps between timber and metal of approximately 2 mm or more. Pourable and injectable with cartridge.

CODE	description	content		package	pcs
		[ml]	*[US fl oz]*		
XEPOXF400[(1)]	F - fluid	400	*13.53*	cartridge	1
XEPOXF3000	F - fluid	A + B = 3000	*A+B = 101.44*	drums	1
XEPOXF5000	F - fluid	A + B = 5000	*A+B = 169.07*	drums	1

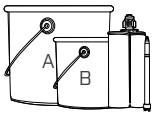

[(1)] 1 STINGXP mixing nozzle included per XEPOXF400 cartridge
Component A classification: Eye Irrit. 2; Skin Irrit. 2; Skin Sens. 1A; Aquatic Chronic 2; Component classification B: Repr. 1B; Acute Tox. 4; STOT RE 2; Skin Corr. 1B; Eye Dam. 1; Skin Sens. 1A.

XEPOX D - dense

Two-component epoxy thixotropic (dense) adhesive for structural usage, applicable via injections especially into horizontal or vertical holes in Glulam and solid timber beams, masonry or reinforced concrete walls.
Injectable with cartridge.

CODE	description	content		package	pcs
		[ml]	*[US fl oz]*		
XEPOXD400[(1)]	D - dense	400	*13.53*	cartridge	1



[(1)] 1 STINGXP mixing nozzle included per XEPOXD400 cartridge

Component A classification: Eye Irrit. 2; Skin Irrit. 2; Skin Sens. 1; Aquatic Chronic 2; Component classification B: Repr. 1B; Acute Tox. 4; Skin Corr. 1B; Eye Dam. 1; Skin Sens. 1; Aquatic Chronic 3.

XEPOX G - gel

Two-components epoxy gel adhesive for structural usage, applicable via trowel also on vertical surfaces, permits the realization of thick or uneven layers. Suitable for large timber overlaps, for gluing structural reinforcing elements by using glass or carbon fibre and for metal or timber coatings. Spreadable.

CODE	description	content		package	pcs
		[ml]	*[US fl oz]*		
XEPOXG3000	G-gel	A + B = 3000	*A+B = 101.44*	drums	1

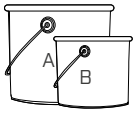

Component A classification: Eye Irrit. 2; Skin Irrit. 2; Skin Sens. 1; Aquatic Chronic 2; Component classification B: Acute Tox. 4; Skin Corr. 1A; Eye Dam. 1; STOT SE 3; Skin Sens. 1; Aquatic Chronic 4.

ADDITIONAL PRODUCTS - ACCESSORIES

CODE	description	pcs
MAMDB	special gun for two-component adhesive	1
STINGXP	spare nozzle for two-component adhesive	1

FIELD OF USE

The mixture of components A and B causes an exothermic reaction (heat development) and, once hardened, forms a three-dimensional structure with exceptional properties, such as: durability over time, interaction with no humidity, excellent thermal stability, great stiffness and strength.
The different viscosities of XEPOX products guarantee versatile uses for different types of joints, both for new constructions and for structural recoveries. The use in combination with steel, in particular plates, sandblasted or drilled, and rods, allows to provide high strength in limited thickness.

1. MOMENT CONTINUITY JOINT

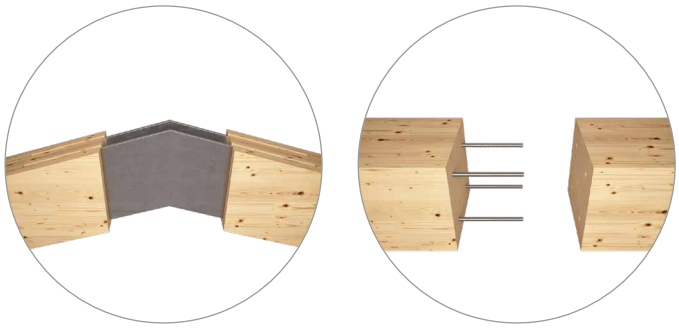

2. TWO- OR THREE-WAY CONNECTIONS



3. TIMBER JOINT



4. REHABILITATION OF DAMAGED PARTS



AESTHETIC IMPROVEMENTS

The cartridge format also allows it to be used for aesthetic adjustments and gluing in small quantities.





APPLICATION AND CONSERVATION TEMPERATURE



ADHESIVE CONSERVATION

Epoxy adhesives must be stored and kept until the immediate time of use at a moderate temperature in both winter and summer (ideally around + 16 °C / + 20 °C).
Extreme temperatures facilitate the separation of individual chemical components, increasing the risk of incorrect mixing. Leaving the packages exposed to the sun considerably reduces the product polymerization time.
Storage temperatures below 10 °C increase the viscosity of adhesives, making extrusion or percolation very difficult.

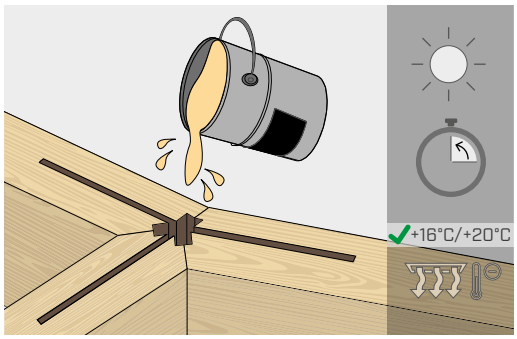

ADHESIVE APPLICATION

The ambient temperature has a significant influence on curing time. It is recommended to carry out structural glueing at an ambient temperature T>+10 °C, ideally around 20 °C. If the temperature is too cold, it is imperative to heat the packages at least one hour before use and to allow for longer times before applying the load. If temperatures should be too high (> 35 °C), glueing should be carried out in cool places, avoiding the hottest hours of the day, considering a significant reduction in curing time. If the above prescriptions are not followed, there is a risk that the static performance of the joint will not be achieved.

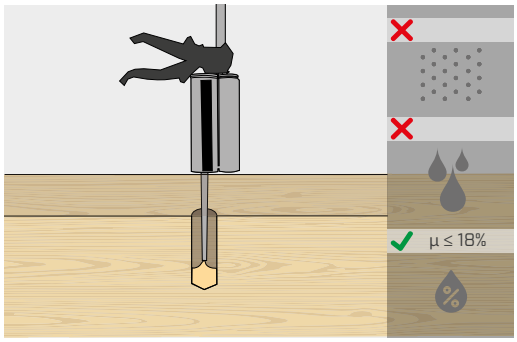

ROUTING AND HOLE TREATMENTS

Before applying the adhesive, the holes and grooves made in the timber must be protected from meteoric water and humidity, and cleaned with compressed air.
If the parts expecting the potting are wet, it is mandatory to dry them.
XEPOX adhesive is recommended for use with timber with a moisture content lower than 18%.

TECHNICAL FEATURES

Properties	Standard		XEPOX P	XEPOX L	XEPOX F	XEPOX D	XEPOX G
Specific weight	ASTM D 792-66	[kg/dm^3]	≈ 1,10	≈ 1,40	≈ 1,45	≈ 2,00	≈ 1,90
Stoichiometric volume ratio (A:B) [(1)]	-	-	100 : 50 [(2)]	100 : 50	100 : 50	100 : 50	100 : 50
Viscosity (25 °C)	-	[mPa·s]	A = 1100 B = 250	A = 2300 B = 800	A = 14000 B = 11000	A = 300000 B = 300000	A = 450000 B = 13000
Pot life (23 °C ± 2°C)[(3)]	ERL 13-70	[min]	50 ÷ 60	50 ÷ 60	50 ÷ 60	50 ÷ 60	60 ÷ 70
Application temperature	-	[°C]	10 ÷ 35	10 ÷ 35	10 ÷ 35	10÷35	10÷35
Glass transition temperature	EN ISO 11357-2	[°C]	66	61	59	57	63
Normal adhesion tension (mean value) σ_0	EN 12188	[N/mm^2]	21	27	25	19	23
Compressive oblique shear strength at 50° $\sigma_{0,50°}$	EN 12188	[N/mm^2]	94	69	93	55	102
Compressive oblique shear strength at 60° $\sigma_{0,60°}$	EN 12188	[N/mm^2]	106	88	101	80	109
Compressive oblique shear strength at 70° $\sigma_{0,70°}$	EN 12188	[N/mm^2]	121	103	115	95	116
Compression strength[(4)]	EN 13412	[N/mm^2]	95	88	85	84	94
Elastic modulus in compression	EN 13412	[N/mm^2]	3438	3098	3937	3824	5764
Coefficient of thermal expansion[(5)]	EN 1770	[m/m°C]	7,0 x 10^{-5}	7,0 x 10^{-5}	6,0 x 10^{-5}	6,0 x 10^{-5}	5,0 x 10^{-5}
Tensile strength[(6)]	ASTM D638	[N/mm^2]	40	36	30	28	30
Elastic modulus in tension[(6)]	ASTM D638	[N/mm^2]	3300	4600	4600	6600	7900
Flexural strength[(6)]	ASTM D790	[N/mm^2]	86	64	38	46	46
Elastic modulus in flexure[(6)]	ASTM D790	[N/mm^2]	2400	3700	2600	5400	5400
Unitary shear strength by punch tool[(6)]	ASTM D732	[N/mm^2]	28	29	27	19	25

NOTES

(1) The components are packaged in pre-measured quantities, ready to use. The ratio is by volume (not weight).

(2) It is best not to use more than one litre of mixed XEPOX P at a time. The weight ratio between components A:B is around 100:44,4

(3) Pot-life refers to the time required for the initial viscosity of the mixture to double or quadruple. This is the time during which the resin remains usable after being mixed with the hardener. It differs from the working life, which is the time available for the operator to apply and handle the resin (approximately 25-30 min).

(4) Average value (out of 3 tests performed) at the end of load/unload cycles.

(5) Coefficient of thermal expansion in the range from -20 °C to +40 °C, according to UNI EN 1770.

(6) Average value from tests carried out in the research campaign: "Innovative connections for timber structural elements" - Politecnico di Milano.

- XEPOX is registered as European Union Trade Mark No. 018146096.

JOINTS WITH GLUED RODS

The indications contained in DIN 1052:2008 and in the Italian standards CNR DT 207:2018 are reported.

CALCULATION MODE | TENSILE STRENGTH

The tensile strength of a rod of diameter d is equal to:

$$R_{ax,d} = min \begin{cases} f_{y,d} \cdot A_{res} & \text{steel rod failure} \\ \pi \cdot d \cdot l_{ad} \cdot f_{v,d} & \text{timber-to--adhesive interface failure} \\ f_{t,0,d} \cdot A_{eff} & \text{failure on timber side} \end{cases}$$



where:

f_{yd} is the design yield strength of the steel rod [N/mm^2]

A_{res} is the strength area of the steel rod [mm^2]

d is the nominal diameter of the steel rod [mm]

l_{ad} is the glueing length of the steel rod [mm]

$f_{v,d}$ is the design shear strength of the glueing [N/mm^2]

$f_{t,0,d}$ is the design tensile strength parallel to the timber grain [N/mm^2]

A_{eff} is the effective failure area of timber [mm^2]



The effective area A_{eff} cannot be assumed greater than that corresponding to a timber square of side 6·d and in any case not greater than the effective geometry.

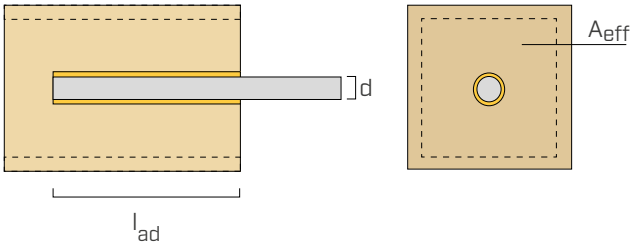

The characteristic shear strength $f_{v,k}$ depends on the glueing length:

l_{ad} [mm]	$f_{v,k}$ [MPa]
≤ 250	4
250 < l_{ad} ≤ 500	5,25 - 0,005 · l
500 < l_{ad} ≤ 1000	3,5 - 0,0015 · l

For a glueing angle α with respect to the grain direction:

$$f_{v,\alpha,k} = f_{v,k} \cdot (1,5 \cdot sin^2\alpha + cos^2\alpha)$$

CALCULATION MODE | SHEAR STRENGTH

The shear strength of a rod can be calculated using the well-known Johansen's formulas for bolts with the following measures.

$f_{h,k\perp} = f_{h,k} + 25\%$

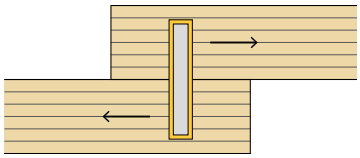

For rods glued **perpendicularly to the fibre**, the bearing stress strength can be increased by up to 25%.

$f_{h,k,//} = 10\% \ f_{h,k,\perp}$

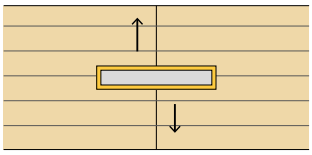

For rods glued **parallel to the grain**, thebearing strength is 10% of the value perpendicular to the grain.

The hollow effect is calculated as the strength given by the timber-adhesive interface. To obtain the strength of a rod glued at an α angle compared to the grain, it is permitted to interpolate linearly between the strength values for α=0° and α=90°.

INSTALLATION

MINIMUM DISTANCES FOR TENSILE LOADS

Rods glued // to the fibre

a_2	5·d
$a_{2,c}$	2,5·d

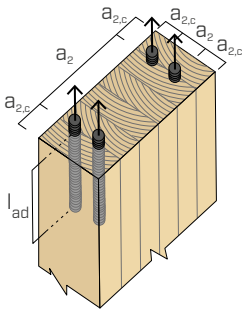

Rods glued ⊥ to the grain

a_1	4·d
a_2	4·d
$a_{1,c}$	2,5·d
$a_{2,c}$	2,5·d

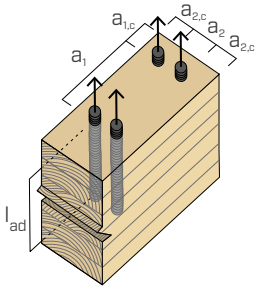

MINIMUM DISTANCES FOR SHEAR LOADS

Rods glued // to the fibre

a_2	5·d
$a_{2,c}$	2,5·d
$a_{2,t}$	4·d

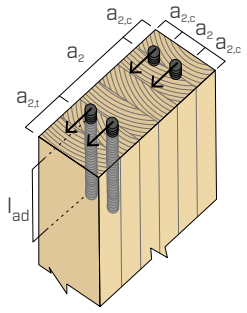

Rods glued ⊥ to the grain

a_1	5·d
a_2	3·d
$a_{3,t}$	7·d
$a_{3,c}$	3·d
$a_{4,t}$	3·d
$a_{4,c}$	3·d

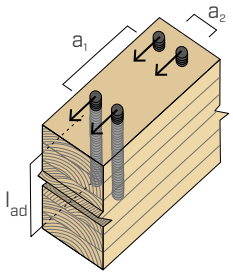

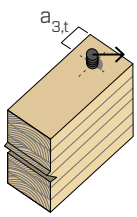

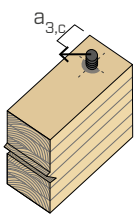

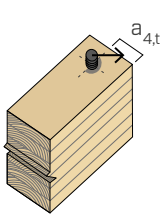

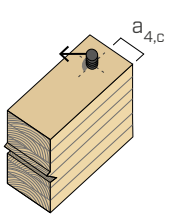

GLUED RODS - INSTALLATION INSTRUCTIONS

OPTION 1 (only valid for vertical gluing)

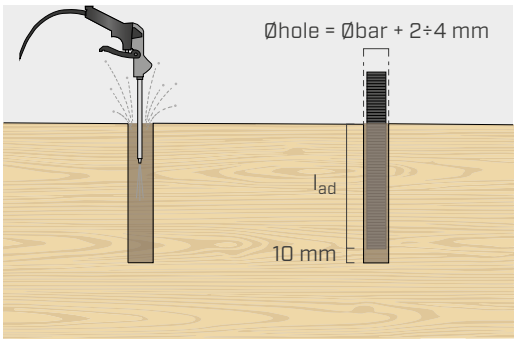

MAKING THE HOLE

It is advisable to drill a blind hole with a diameter equal to that of the threaded rod increased by 2 to 4 mm. The drill bit must be clean and dry in order to remove any contamination that could affect the polymerization process. Likewise, the rod must be perfectly clean and free of any traces of oil or water on its surface. The hole must be cleaned of swarf or dust using compressed air.

Consider a hole length equal to the glueing length derived from the calculations, increased by 10 mm .

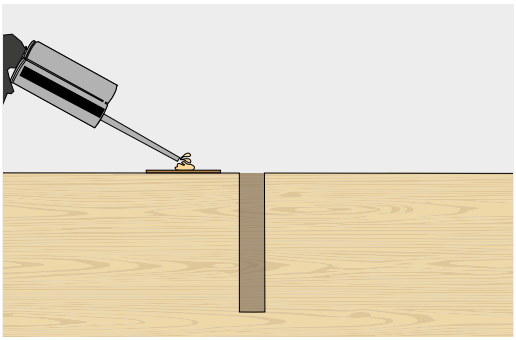

ADHESIVE PREPARATION

After wearing all the necessary PPE, remove the locking ring and protective cap from the cartridge, install the STINGXP mixing nozzle and fasten it by replacing the locking ring.
It is recommended to use correctly stored cartridges as indicated on the previous pages.
Insert the cartridge into the MAMMOTH DOUBLE gun. Start dispensing the resin, discarding it into a separate container until the mixture is homogeneous and free of streaks. Only when the colour of the resin is homogeneous the mixing of the two components can be considered correct.

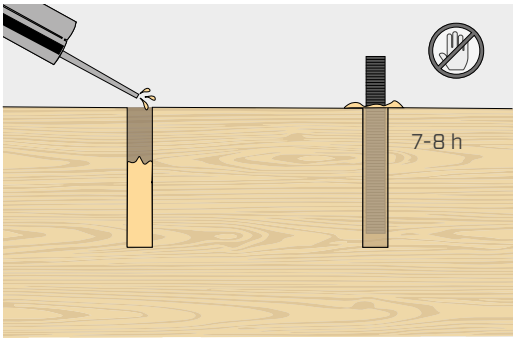

FILLING THE HOLE AND POSITIONING THE ROD

Fill the hole with the required amount of adhesive. It is advisable to exceed the amount of resin a little to be sure that no air bubbles are trapped. A slight lack of resin can be made up after the rod has been inserted.
Slowly insert the rod by turning clockwise and sink it into the hole. It may help to mark the insertion depth on the rod with a felt-tip pen. Ideally, about 1 cm should remain between the end of the rod and the bottom of the hole.
The straightness of the rod can be adjusted up to 15 minutes after insertion. A holding device can be used to keep the rod steady.
For the next 7 to 8 hours, neither the timber nor the rod must be touched or stressed.
It is advisable to leave a small amount of resin overhanging the hole in order to compensate for possible absorption of the timber. Excess adhesive can be wiped off with a cloth or spatula.

OPTION 2 - RECOMMENDED (valid for vertical or horizontal glueing with sealing)

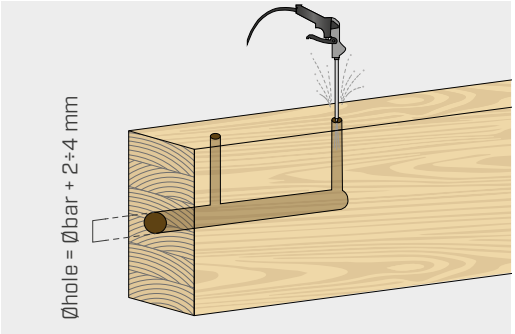

MAKING THE HOLE

It is advisable to drill a blind hole with a diameter equal to that of the threaded rod increased by 2 to 4 mm. The drill bit must be clean and dry in order to remove any contamination that could affect the polymerization process. Likewise, the rod must be perfectly clean and free of any traces of oil or water on its surface.
Drill two holes perpendicular to each blind hole, one for injection (at the base of the main hole) and one for venting (near the top of the main hole). All 3 holes must be perfectly clean, free of swarf or dust. It is recommended to use air guns to check that they are all connected.

Consider a main hole length equal to the glueing length derived from the calculations, increased by 10 mm .

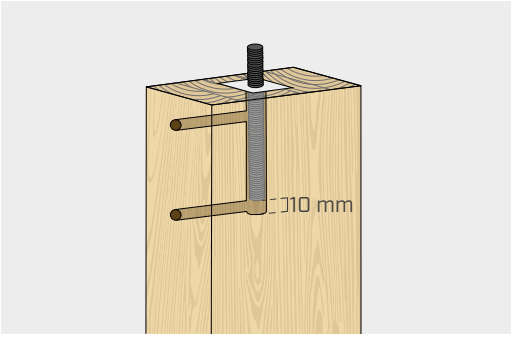

ROD POSITIONING

Insert the rod into the hole. Ideally, about 1 cm should remain between the end of the rod and the bottom of the hole. It may help to mark the required insertion length with a felt-tip pen on the rod.
A support device can be used to keep the rod perfectly centred.
Seal the entrance of the hole around the threaded rod, taking care not to put sealing material inside the hole.
Pay attention to any cracks in the timber that could cause the resin to leak out before curing. Similarly, the sealant must not leak in such a way that the resin leaks.

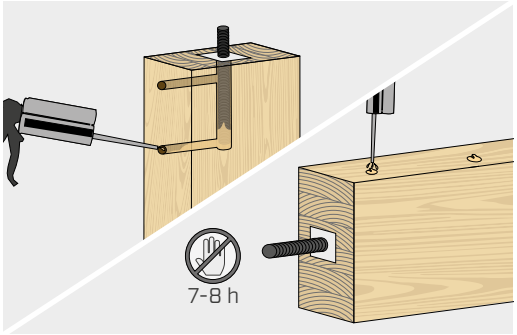

FILLING THE HOLE

Through the bottom injection hole, inject resin until it flows out of the vent hole. Filling from below allows the hole to be filled free of air bubbles.
If the rod is kept in a horizontal position, filling must be carried out by injecting from the top hole.
Add adhesive if you notice a drop in the adhesive level (due to late air leakage or leaks). Plug the vent and injection holes with timber dowels, cleaning off excess resin.
The straightness of the rod can be adjusted up to 15 minutes after resin injection.
For the next 7 to 8 hours, neither the timber nor the rod must be touched or stressed.

MOMENT JOINTS WITH PLATES

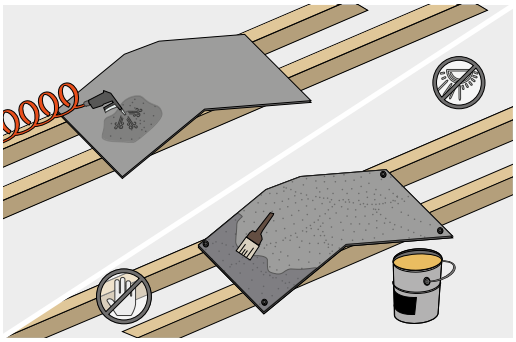

PREPARATION OF METALLIC SUPPORTS

Metal bits must be cleaned and degreased, free of any traces of oil or water on their entire surface.
Smooth sheets must be treated with grade SA2,5/SA3 sanding and then protected through a layer of XEPOX P to avoid their oxidation. To ensure the correct position of the bits within the grooves, it is recommended to place spacer washers on the metal inserts during the protective layer curing phase. Protect metal surfaces from direct sunlight.

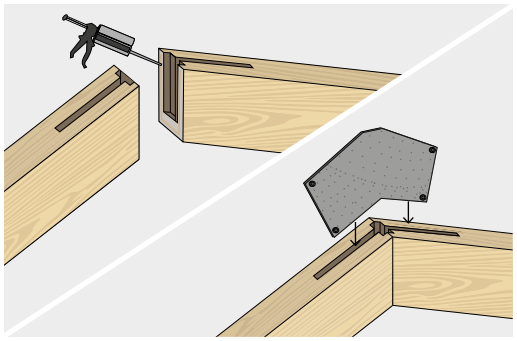

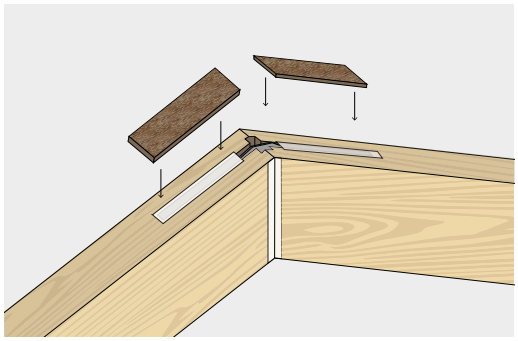

PREPARATION OF TIMBER SUPPORTS

It is advisable to make a routing cut for each metal support with a thickness equal to that of the plate increased by 4÷6 mm (2÷3 mm of glue per side). The grooved area must be perfectly clean, free of swarf or dust. It is advised to provide also a "useful" bearing of adhesive to be made with a special machine at the top of the timber elements in order to guarantee of the functionality of the contact system.
Close to the vertical edges, apply continuous strips of adhesive paper tape at about 2÷3 mm from the edge. After inserting the plate into the routing, apply a continuous bead of acetic silicone and adhere it to the tape-protected surfaces as well. The outer grooves of sloping elements must be sealed with timber boards before applying resin. Only the end of the routing at the highest point must be left uncovered for gluing.
Any contamination between sealants and resin must be avoided.

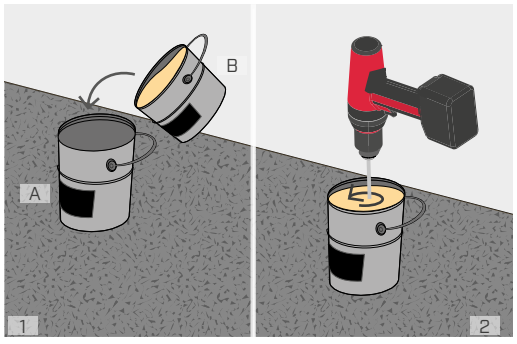

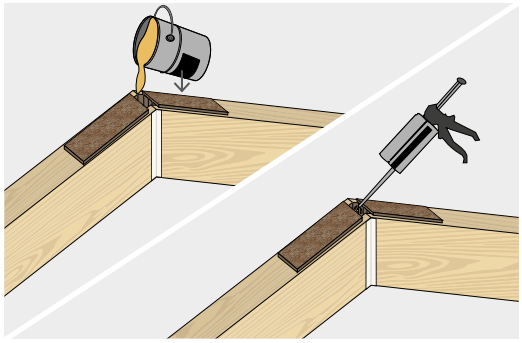

CONSTRUCTION OF THE JOINT

Wear all necessary PPE before starting mixing operations.
Product in drums: If necessary, mix the contents of the individual packages in order to amalgamate the solid and liquid parts of the compounds until homogeneous products are obtained. Pour component B into the drum containing component A. Mix with a suitable electrically-mounted double-helix mixer (or metal whisk) until a homogeneously coloured mixture is obtained. No white streaks or different coloured parts should be visible inside the bin. Then pour the resulting mixture into the routing directly from the mixing drum (pouring) or take the product and spread it out with a spatula.

Product in cartridges: Insert the cartridge including nozzle into the MAMMOTH DOUBLE gun, taking care to ensure that it is firmly seated in the housing. Start dispensing the resin, discarding it into a separate container until the mixture is homogeneous and free of streaks. Only when the colour of the resin is homogeneous the mixing of the two components can be considered correct.

MOMENT JOINTS WITH PLATES

CALCULATION MODE | HEAD SECTION

The stresses due to the moment and the axial stress are determined by homogenizing the materials of the section, in the hypothesis of conservation of the flat sections. The shear stress is absorbed only by the plates. It is also necessary to check the stresses acting on the wood section net of the grooved sections.

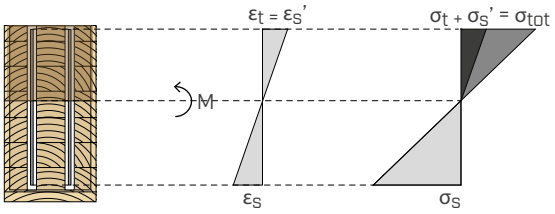

CALCULATION METHOD | MOMENT DISTRIBUTION ON THE STEEL-ADHESIVE-TIMBER INTERFACE

The moment is distributed over the number of interfaces (1 plate = 2 interfaces) and then broken down into stresses, considering both the polar inertia around the centre of gravity and the different rigidity of the timber. In this way, the maximum tangential tensions are obtained in the orthogonal and parallel direction to the fibre, to be verified in their interaction.

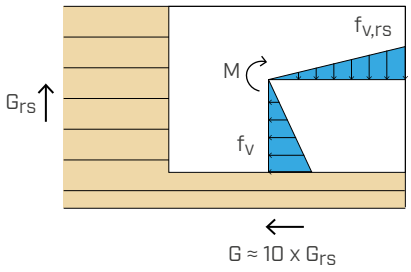

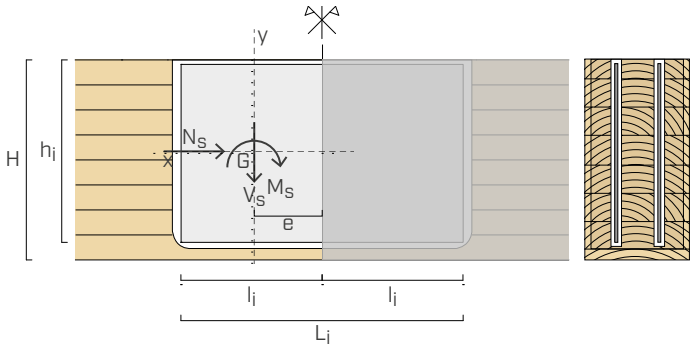

Polar moment of inertia of half the bit with respect to the centre of gravity, weighed on the wood cutting modules:

$$J_P^* = \frac{l_i \cdot h^3}{12} \cdot G + \frac{l_i^3 \cdot h}{12} \cdot G_{rs}$$

Calculation of tangential forces and combined verification:

$$\tau_{max,hor} = \frac{(M_d + M_{T,Ed})}{2 \cdot n_i \cdot J_P^*} \cdot \frac{h}{2} \cdot G + \frac{N_d}{2\ n_i\ A_i}$$

$$\tau_{max,vert} = \frac{(M_d + M_{T,Ed}) \cdot e}{2 \cdot n_i \cdot J_P^*} \cdot G_{rs} + \frac{V_d}{2\ n_i\ A_i}$$

$$\sqrt{\left(\frac{\tau_{max,hor}}{f_{v,d}}\right)^2 + \left(\frac{\tau_{max,vert}}{f_{v,rs,d}}\right)^2} \leq 1$$

CONNECTION STIFFNESS

The moment joints made with XEPOX epoxy adhesives guarantee excellent stiffness to the connected elements. In fact, comparing the behaviour of a simply supported beam consisting of two timber elements moment-joined using XEPOX plate and resin with the behaviour of a simply supported continuous beam of equal span and cross-section, stressed by the same load configuration, it is noticed that the moment connection is able to guarantee a stiffness and moment transmission that are close to those of the continuous beam.

EXPERIMENTAL

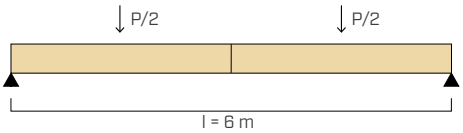

REFERENCE (whole beam, calculated)

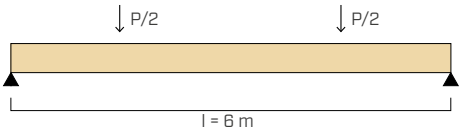

$$\frac{M_{test}}{M_{Rif}} = 0{,}90$$

$$\frac{E_{test}}{E_{Rif}} = 0{,}77$$

The deflection measured experimentally at the breaking load is approximately 55 mm; the elastic deflection of a whole beam calculated for the same load is 33 mm. The increase in vertical displacement for the jointed beam in the vicinity of the joint failure is therefore l/270. It should be noted that these values are not comparable with the deflection values normally used in design, where the deflection is assessed under operating conditions and not at ultimate limit states.

Values derived from tests are not characteristic values and are only to be understood as indicative values of the general behaviour of epoxy resin moment unions and plates.

COMPRESSION-RESPONSIVE TIMBER IN HEAD SECTION

The two graphs below show the horizontal displacements of the tensioned and compressed grains in the head section of the connection, recorded during tests carried out at the Politecnico di Milano.
The two tests involved two moment joints made with XEPOX and metal bits (see example on following pages). The presence of a medium-thick resin pad (5-10 mm) ensured contact between the two head sections. It can be observed in both cases that the greatest displacement occurs in the tensioned grains, validating the computational hypothesis that, if contact between the two sections is guaranteed, the timber also reacts in compression along with the metal bits, shifting the neutral axis upward.

EXAMPLE 1

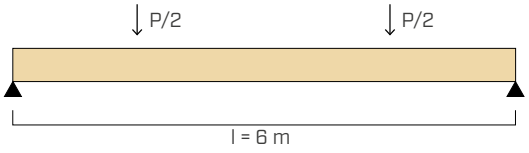

EXAMPLE 2

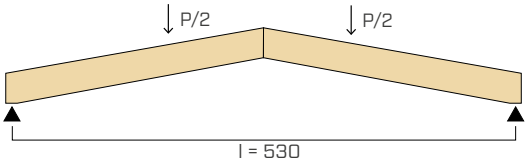

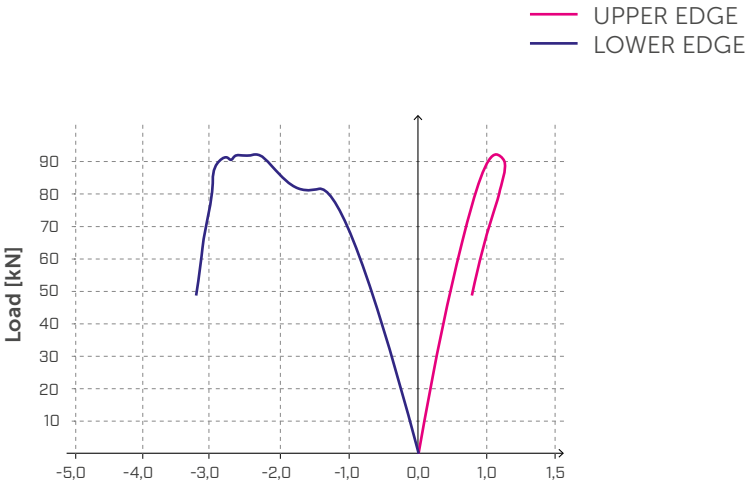

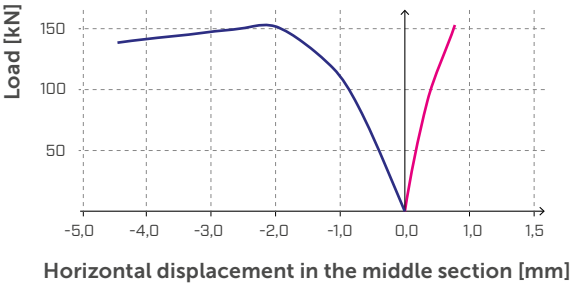

CALCULATION EXAMPLE

The comparison between the results of 4-point bending tests carried out at the laboratories of the Politecnico di Milano and the calculation results of the same moment joint with glued plates is now reported.
As it can be observed from the over-resistance factor f, calculated as the ratio of the resistance moment from testing to the calculated resistance moment, there is a good margin of safety in the calculation of these joints.
The value resulting from the test is not a characteristic value and is not intended to be a use value in the design.

EXAMPLE 1 | CONTINUITY JOINT

GEOMETRY OF THE NODE: BEAM AND PLATES

n_i	2	mm	**B**	200	mm
S_i	5	mm	**H**	360	mm
h_i	320	mm	B_n	178	mm
l_i	400	mm	α_1	0	°
e	200	mm			

PROJECT MATERIAL AND DATA

Steel class	**S275**	
γ_{M0}	1	

Metal bits sandblasted to grade SA2.5/SA3 (ISO8501).

Wood class	**GL24h**	
$f_{c,0,k}$	24,0	MPa
$f_{c,90,k}$	2,1	MPa
$f_{v,k}$	3,5	MPa
$f_{v,rs}$	1,2	MPa
k_{mod}	1,1	
γ_M	1,3	

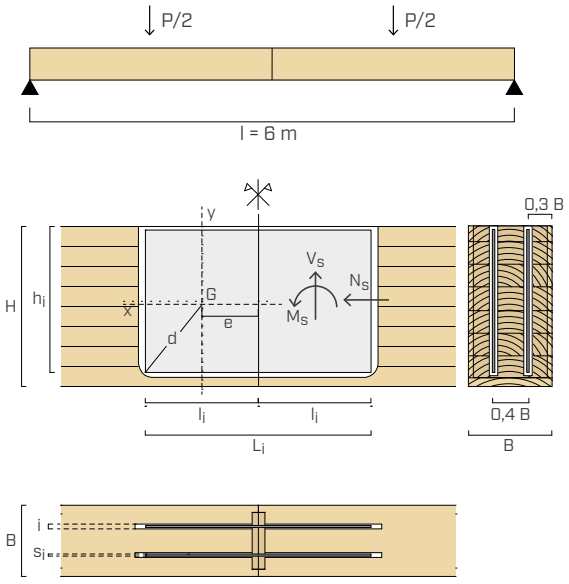

USE OF XEPOX

Protect the metal bits from oxidation with **XEPOX P**. Use **XEPOX F** or **XEPOX L** adhesive.

DESIGN LOADS ACTING ON THE CONNECTION

M_d	design moment applied	**50,9**	**kNm**
V_d	applied design shear	**0**	**kN**
N_d	applied axial action	**0**	**kN**

CONTROLS

HEAD JOINT VERIFICATION [1], [2]

			% verification
σ_t	maximum compressive stress on timber side	10,2 MPa	50 %
σ_s	maximum compressive stress on steel side	179,4 MPa	65 %
$\sigma_{s'}$	maximum tensile stress on steel side	256,9 MPa	93 %

TIMBER NET SECTION VERIFICATION

			% verification
$\sigma_{t,m}$	maximum bending stress on timber side	13,2 MPa	65 %
$F_{t,local}$	maximum tensile load on timber side	242,1 kN	100 %

VERIFICATION OF INTERFACE SURFACES MAXIMUM TANGENTIAL TENSION [3], [4]

			% verification
J_p*	weighted polar inertia modulus	$8{,}50 \cdot 10^{11}$ Nmm^2	
$\tau_{max,hor}$(3)	maximum tangential stress (shear)	1,58 MPa	53 %
$\tau_{max,vert}$(3)	maximum tangential stress (rolling shear)	0,2 MPa	19 %
combined effort verification			**57 %**

COMPARISON OF CALCULATED STRENGTH AND TEST STRENGTH

Connection crisis mode:	% verification
Maximum tensile load on timber side	100 %

$M_d = M_{Rd}$	design moment of resistance	**50,9**	**kNm**
M_{TEST}	moment of resistance from test (Politecnico Milano)	**94,1**	**kNm**
f	**overstrength factor**	**1,8**	

LEGEND:

n_i	number of bits	e	eccentricity between the centre of gravity of the plate and the head joint
S_i	metal bits thickness	J_{p*}	weighted half insert polar moment of inertia
h_i	metal bits height	$f_{c,o,k}$	characteristic compressive strength parallel to the grain
l_i	metal bits insertion length	$f_{c,90,k}$	characteristic compressive strength perpendicular to the grain
B	beam base	$f_{v,k}$	characteristic shear resistance
H	beam height	$f_{v,rs}$	characteristic rolling shear resistance
B_n	beam width less the routing	M_{TEST}	last moment of resistance from tests carried out at the Politecnico di Milano
α_1	beams angle of inclination	f	over-resistance factor ($f = M_{TEST}/M_{Rd}$)

NOTES

The coefficients k_{mod} and y_M should be taken according to the current regulations standard adopted for the design.

It should be noted that the calculations have been made taking into account the values of k_{mod} and γ_M according to EN 1995 1-1, and γ_{M0} according to EN 1993 1-1.

(1) The calculation of the cross-section has been made considering elastic-line bonds for all materials. It should be noted that in case of axial and shear loads, it is necessary to check the combination of these forces.

(2) In this calculation, it is considered that the resin bearing allows full contact of the interface section, and therefore the wood can react to compression. If the bearing is not made, it is advisable to check the metal bit alone as a reagent, applying the formula with the geometrical parameters of the bit:

$$f_{yd} \leq \frac{M_d}{\frac{B \cdot h^2}{6}}$$

(3) It should be pointed out that XEPOX adhesives are characterised by characteristic shear and tensile strengths that remain unchanged over time and are clearly superior to the strengths offered by the material timber. Due to this reason the interface torsional capacity check can be performed only on the timber element, considering the same check satisfied by the adhesive.

(4) The shear stress "τ" of the timber-adhesive-steel interface, transferred to the timber, is calculated at its maximum value in the case of an inclination parallel or perpendicular to the wood grain. These stresses are compared with shear strength in timber and rolling shear resistance, respectively. The contribution of a transport moment M should also be considered$_{T,ED}$ resulting from shear stress, if present.

- XEPOX is registered as European Union Trade Mark No. 018146096.

NEO

NEOPRENE SUPPORTING PLATE

SUPPORTS
Ideal for creating structural supports that reduce stress concentrations on the beam. Model with CE marking to guarantee the suitability for use.

DIMENSIONS
The stripe width has been optimised for the most common joist cross sections. Available also in sheets to be conveniently cut depending on the worksite needs.

CE MARKING
Model according to EN 1337-3 ideal for structural use.

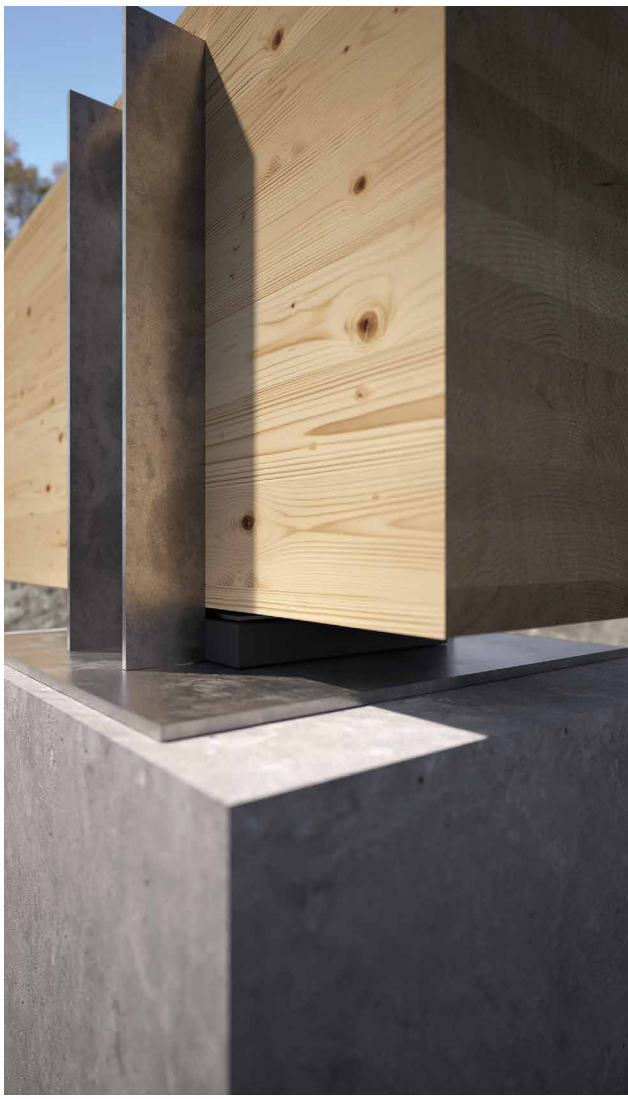

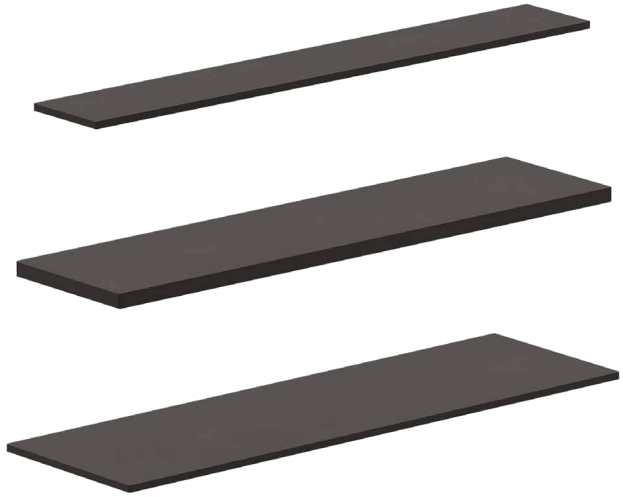

SERVICE CLASS	SC1 SC2
MATERIAL	
natural rubber and styrene rubber	
THICKNESS [mm]	10 or 20 mm



FIELDS OF USE

Structural support of timber beams on concrete or steel.

For use on:
- solid timber softwood and hardwood
- glulam, LVL

CODES AND DIMENSIONS

NEO 10 E NEO 20

CODE	description	s	B	L	*s*	*B*	*L*	weight		pcs
		[mm]	[mm]	[mm]	*[in]*	*[in]*	*[in]*	[kg]	*[lb]*	
NEO101280	stripe	10	120	800	*3/8*	*4 3/4*	*31 1/2*	1,46	*3.22*	1
NEO101680	stripe	10	160	800	*3/8*	*6 1/4*	*31 1/2*	1,95	*4.30*	1
NEO202080	stripe	20	200	800	*13/16*	*8*	*31 1/2*	4,86	*10.71*	1
NEO202480	stripe	20	240	800	*13/16*	*9 1/2*	*31 1/2*	5,84	*12.87*	1
NEO10PAL	sheet	10	1200	800	*3/8*	*47 1/4*	*31 1/2*	14,6	*32.19*	1
NEO20PAL	sheet	20	1200	800	*13/16*	*47 1/4*	*31 1/2*	29,2	*64.37*	1

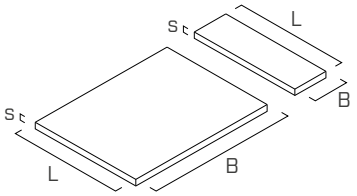

NEO 10 CE

CODE	description	s	B	L	*s*	*B*	*L*	weight		pcs
		[mm]	[mm]	[mm]	*[in]*	*[in]*	*[in]*	[kg]	*[lb]*	
NEO101680CE	stripe	10	160	800	*3/8*	*6 1/4*	*31 1/2*	1,60	*3.53*	1
NEO102080CE	stripe	10	200	800	*3/8*	*8*	*31 1/2*	2,00	*4.41*	1

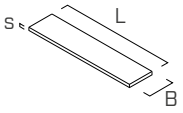

NEO 20 CE

CODE	description	s	B	L	*s*	*B*	*L*	weight		pcs
		[mm]	[mm]	[mm]	*[in]*	*[in]*	*[in]*	[kg]	*[lb]*	
NEO202080CE	stripe	20	200	800	*13/16*	*8*	*31 1/2*	4,00	*8.82*	1
NEO202480CE	stripe	20	240	800	*13/16*	*9 1/2*	*31 1/2*	4,80	*10.58*	1

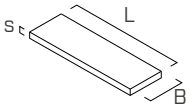

TECHNICAL DATA

NEO

Properties		values
Specific weight	g/cm^3	1,25

NEO CE

Properties		regulations		values
Specific weight			g/cm^3	1,25
Shear modulus G	-	EN 1337-3 p. 4.3.1.1	MPa	0,9
Tensile strength	-	ISO 37 type 2	MPa	≥ 16[(1)] ≥ 14[(2)]
Minimum elongation at failure	-	ISO 37 type 2	%	425[(1)] 375[(2)]
Minimum strength to laceration	24 h; 70 °C	ISO 34-1 method A	kN/m	≥ 8
Residual deformation after compression	spacer 9,38 - 25 %	ISO 815 / 24 h 70 °C	%	≤ 30
Resistance to ozone	elongation: 30 % - 96 h; 40 °C ± 2 °C; 25 pphm	ISO 1431-1	visual	no visible cracks
Accelerated ageing	(minimum variation of the non-aged value)	ISO 188	-	- 5 + 10
Hardness	7 d, 70 °C	ISO 48	IRHD	60 ± 5
Tensile strength	7 d, 70 °C	ISO 37 type 2	%	± 15
Elongation at failure	7 d, 70 °C	ISO 37 type 2	%	± 25

(1) Printed specimen.
(2) Specimen from a support.

COMPRESSION STRENGTH

- The characteristic compressive strength R_k for simple bearing supports is calculated according to EN 1337-3.

$$R_k = min\left(1{,}4 \cdot G \cdot \frac{A^2}{l_p; 1{,}8t}; 7 \cdot A \cdot G\right)$$

with plate A=area, l_p= perimeter and t=thickness.

- Design values can be obtained from characteristic values as follows:

$$R_d = \frac{R_k}{\gamma_M}$$

The coefficient γ_M should be taken according to the current regulations used for the calculation.

DOWELS, BOLTS AND RODS

DOWELS, BOLTS AND RODS

DOWELS

SBD
SELF-DRILLING DOWEL 154

STA
SMOOTH DOWEL 162

BOLTS, RODS, WASHERS AND NUTS

KOS
HEXAGONAL HEAD BOLT 168

KOT
ROUND HEAD BOLT 173

MET
THREADED RODS, NUTS AND WASHERS 174

SURFACE CONNECTORS AND BRACINGS

DBB
SURFACE CONNECTORS DIN 1052 180

ZVB
HOOKS FOR BRACINGS 182

SBD

SELF-DRILLING DOWEL

CE
EN 14592

TAPERED TIP
The new tapered self-perforating tip minimises insertion times in timber-to-metal connection systems and guarantees applications in hard-to-reach positions (reduced application force).

GREATER STRENGTH
Higher shear strengths than the previous version.
The 7.5 mm diameter ensures higher shear strengths than other solutions on the market and enables optimisation of the number of fasteners.

DOUBLE THREAD
The thread close to the tip (b1) facilitates screwing. The longer under-head thread (b_2) allows quick and precise closing of the joint.

CYLINDRICAL HEAD
It allows the dowel to penetrate beyond the surface of the timber substrate. It ensures an optimal appearance and meets fire-strength requisites.

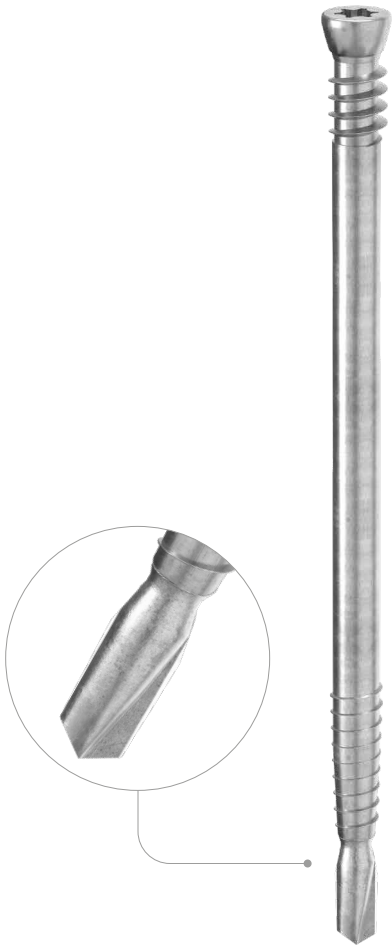

USA, Canada and more design values available online.

MY PROJECT SOFTWARE

VIDEO

BIT INCLUDED

DIAMETER [mm]	7,5	7,5 — 20
LENGTH [mm]	55	235 — 1000
SERVICE CLASS	SC1 SC2	
ATMOSPHERIC CORROSIVITY	C1 C2	
WOOD CORROSIVITY	T1 T2	
MATERIAL	Zn ELECTRO PLATED	electrogalvanized carbon steel

EXTERNAL LOADS

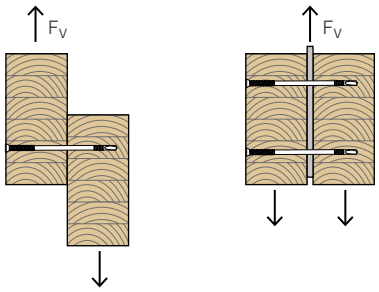



FIELDS OF USE

Self-drilling system for concealed timber-to. steel joints.
It can be used with screw guns running at 600-2100 rpm, minimum applied force 25 kg, with:

- steel S235 ≤ 10.0 mm
- steel S275 ≤ 10.0 mm
- steel S355 ≤ 10.0 mm
- ALUMINI, ALUMIDI and ALUMAXI brackets



MOMENT RESTORING

It restores shear and moment forces in concealed centreline joints of large beams.

EXCEPTIONAL SPEED

The only dowel that drills a 5 mm thick S355 plate in 20 seconds (horizontal application with an applied force of 25 kg).
No self-drilling dowel exceeds the application speed of the SBD with its new tip.



Fastening of Rothoblaas pillar-holder with internal knife plate F70.

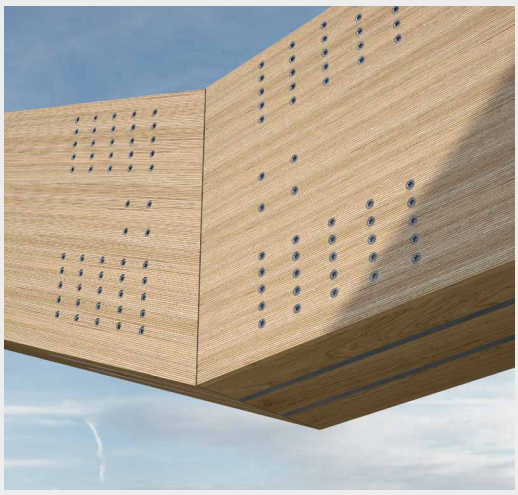

Rigid "knee" joint with double internal plate (LVL).

CODES AND DIMENSIONS

SBD L ≥ 95 mm

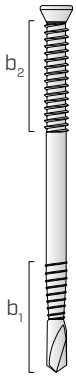

d_1 [mm] *[in]*	CODE	L [mm]	*L [in]*	b_1 [mm]	b_2 [mm]	pcs
7,5 ***0.30*** **TX 40**	**SBD7595**	95	*3 3/4*	40	10	50
	SBD75115	115	*4 1/2*	40	10	50
	SBD75135	135	*5 5/16*	40	10	50
	SBD75155	155	*6 1/8*	40	20	50
	SBD75175	175	*6 7/8*	40	40	50
	SBD75195	195	*7 11/16*	40	40	50
	SBD75215	215	*8 7/16*	40	40	50
	SBD75235	235	*9 1/4*	40	40	50

SBD L ≤ 75 mm

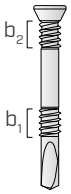

d_1 [mm] *[in]*	CODE	L [mm]	*L [in]*	b_1 [mm]	b_2 [mm]	pcs
7,5 ***0.30*** **TX 40**	**SBD7555**	55	*2 3/16*	-	10	50
	SBD7575	75	*2 15/16*	8	10	50

GEOMETRY AND MECHANICAL CHARACTERISTICS

SBD L ≥ 95 mm

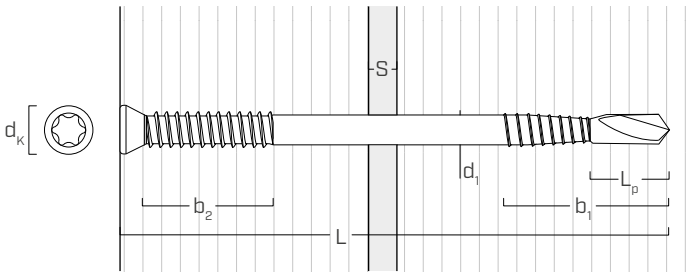

SBD L ≤ 75 mm

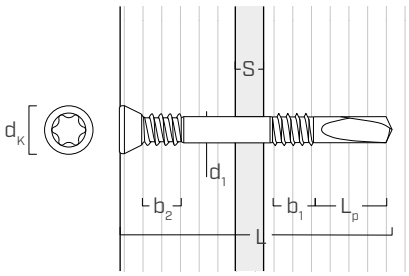

			SBD L ≥ 95 mm	SBD L ≤ 75 mm
Nominal diameter	**d_1**	**[mm]**	**7,5**	**7,5**
Head diameter	d_K	[mm]	11,00	11,00
Tip length	L_p	[mm]	20,0	24,0
Effective length	L_{eff}	[mm]	L-15,0	L-8,0
Characteristic yield moment	$M_{y,k}$	[Nm]	75,0	42,0

INSTALLATION | ALUMINIUM PLATE

plate	single plate [mm]
ALUMINI	6
ALUMIDI	6
ALUMAXI	10

It is suggested to have a milling in the wood equal to the thickness of the plate increased by at least 1 mm.

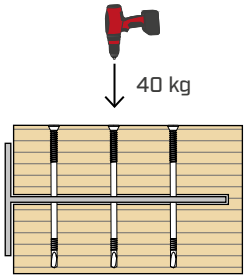

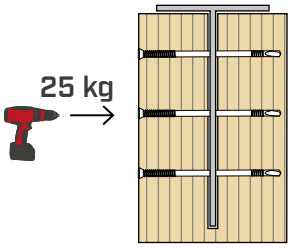

pressure to be applied	40 kg
recommended screwdriver	Mafell A 18M BL
recommended speed	1st gear (600-1000 rpm)

pressure to be applied	25 kg
recommended screwdriver	Mafell A 18M BL
recommended speed	1st gear (600-1000 rpm)

INSTALLATION | STEEL PLATE

plate	single plate [mm]	double plate [mm]
S235 steel	10	8
S275 steel	10	6
S355 steel	10	5

It is suggested to have a milling in the wood equal to the thickness of the plate increased by at least 1 mm.

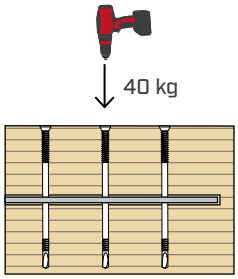

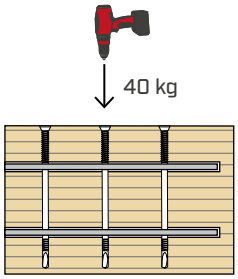

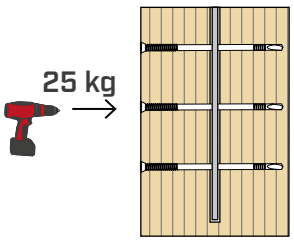

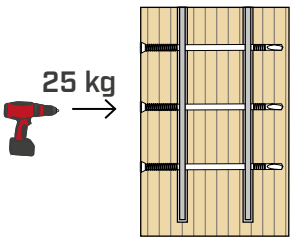

pressure to be applied	40 kg
recommended screwdriver	Mafell A 18M BL
recommended speed	2nd gear (1000-1500 rpm)

pressure to be applied	25 kg
recommended screwdriver	Mafell A 18M BL
recommended speed	2nd gear (1500-2000 rpm)

PLATE HARDNESS

The steel plate hardness can greatly vary the pull-through times of the dowels.
Hardness is in fact defined as the material's strength to drilling or shear.
In general, the harder the plate, the longer the drilling time.
The hardness of the plate does not always depend on the strength of the steel, it can vary from point to point and is strongly influenced by heat treatments: normalized plates have a medium to low hardness, while the hardening process gives the steel high hardnesses.

1 INTERNAL PLATE - DOWEL HEAD INSTALLATION DEPTH 0 mm

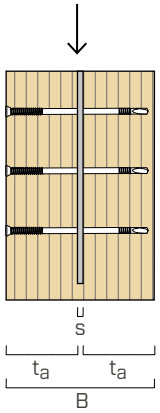

				7,5x55	7,5x75	7,5x95	7,5x115	7,5x135	7,5x155	7,5x175	7,5x195	7,5x215	7,5x235
beam width		**B**	[mm]	60	80	100	120	140	160	180	200	220	240
head insertion depth		**p**	[mm]	0	0	0	0	0	0	0	0	0	0
exterior wood		t_a	[mm]	27	37	47	57	67	77	87	97	107	117
$R_{v,k}$ [kN]	load-to-grain angle		**0°**	7,48	9,20	12,10	12,88	13,97	15,27	16,69	17,65	18,41	18,64
			30°	6,89	8,59	11,21	11,96	12,88	13,99	15,23	16,42	17,09	17,65
			45°	6,41	8,09	10,34	11,20	11,99	12,96	14,05	15,22	16,00	16,62
			60°	6,00	7,67	9,62	10,58	11,25	12,10	13,07	14,12	15,08	15,63
			90°	5,66	7,31	9,01	10,04	10,62	11,37	12,24	13,18	14,19	14,79

1 INTERNAL PLATE - DOWEL HEAD INSTALLATION DEPTH 15 mm

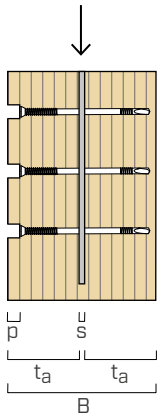

				7,5x55	7,5x75	7,5x95	7,5x115	7,5x135	7,5x155	7,5x175	7,5x195	7,5x215	7,5x235
beam width		**B**	[mm]	80	100	120	140	160	180	200	220	240	-
head insertion depth		**p**	[mm]	15	15	15	15	15	15	15	15	15	-
exterior wood		t_a	[mm]	37	47	57	67	77	87	97	107	117	-
$R_{v,k}$ [kN]	load-to-grain angle		**0°**	8,47	9,10	11,92	12,77	13,91	15,22	16,66	18,02	18,64	-
			30°	7,79	8,49	11,17	11,86	12,82	13,95	15,20	16,54	17,43	-
			45°	7,25	8,00	10,55	11,11	11,93	12,92	14,02	15,20	16,31	-
			60°	6,67	7,58	10,03	10,48	11,19	12,06	13,04	14,09	15,21	-
			90°	6,14	7,23	9,59	9,95	10,56	11,33	12,21	13,16	14,17	-

STRUCTURAL VALUES | TIMBER-TO-METAL-TO-TIMBER

2 INTERNAL PLATES - DOWEL HEAD INSTALLATION DEPTH 0 mm

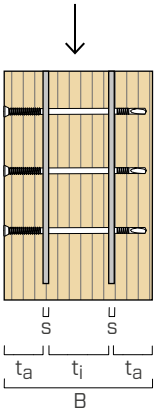

				7,5x55	7,5x75	7,5x95	7,5x115	7,5x135	7,5x155	7,5x175	7,5x195	7,5x215	7,5x235
beam width		B	[mm]	-	-	-	-	140	160	180	200	220	240
head insertion depth		p	[mm]	-	-	-	-	0	0	0	0	0	0
exterior wood		t_a	[mm]	-	-	-	-	45	50	55	60	70	75
interior wood		t_i	[mm]	-	-	-	-	38	48	58	68	68	78
$R_{v,k}$ [kN]	load-to-grain angle		0°	-	-	-	-	20,07	22,80	25,39	28,07	29,24	31,80
			30°	-	-	-	-	18,20	20,91	23,19	25,56	26,55	29,07
			45°	-	-	-	-	16,67	19,36	21,39	23,51	24,36	26,63
			60°	-	-	-	-	15,41	18,01	19,90	21,81	22,55	24,60
			90°	-	-	-	-	14,35	16,73	18,64	20,38	21,01	22,89

2 INTERNAL PLATES - DOWEL HEAD INSTALLATION DEPTH 10 mm

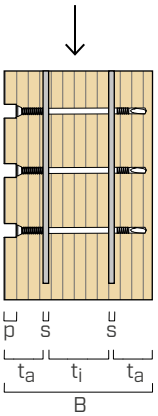

				7,5x55	7,5x75	7,5x95	7,5x115	7,5x135	7,5x155	7,5x175	7,5x195	7,5x215	7,5x235
beam width		B	[mm]	-	-	-	140	160	180	200	220	240	-
head insertion depth		p	[mm]	-	-	-	10	10	10	10	10	10	-
exterior wood		t_a	[mm]	-	-	-	50	55	60	75	80	85	-
interior wood		t_i	[mm]	-	-	-	28	45	50	65	70	75	-
$R_{v,k}$ [kN]	load-to-grain angle		0°	-	-	-	16,56	20,07	23,22	25,65	28,89	30,50	-
			30°	-	-	-	15,07	18,20	21,29	23,14	26,32	27,78	-
			45°	-	-	-	13,86	16,67	19,53	21,11	24,05	25,50	-
			60°	-	-	-	12,85	15,41	18,01	19,43	22,10	23,62	-
			90°	-	-	-	12,00	14,35	16,73	18,01	20,46	22,02	-

MINIMUM DISTANCES FOR DOWELS SUBJECT TO SHEAR

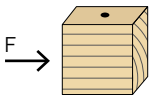

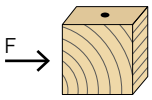

d_1	[mm]		7,5
a_1	[mm]	**5·d**	38
a_2	[mm]	**3·d**	23
$a_{3,t}$	[mm]	**max (7·d ; 80 mm)**	80
$a_{3,c}$	[mm]	**max (3,5·d ; 40 mm)**	40
$a_{4,t}$	[mm]	**3·d**	23
$a_{4,c}$	[mm]	**3·d**	23

d_1	[mm]		7,5
a_1	[mm]	**3·d**	23
a_2	[mm]	**3·d**	23
$a_{3,t}$	[mm]	**max (7·d ; 80 mm)**	80
$a_{3,c}$	[mm]	**max (7·d ; 80 mm)**	80
$a_{4,t}$	[mm]	**4·d**	30
$a_{4,c}$	[mm]	**3·d**	23

α = load-to-grain angle
d = d_1 = nominal dowel diameter

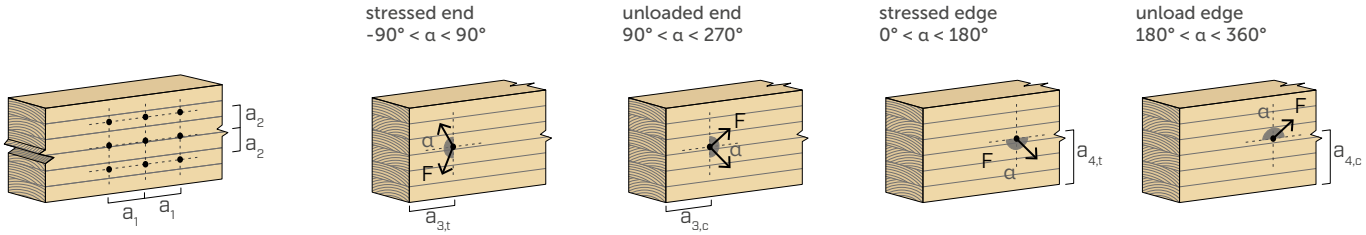

NOTES

- Minimum distances FOR CONNECTORS SUBJECTED TO SHEAR STRESS in accordance with EN 1995:2014.

EFFECTIVE NUMBER FOR SHEAR-STRESSED DOWELS

The load-bearing capacity of a connection made with several dowels, all of the same type and size, may be lower than the sum of the load-bearing capacities of the individual connection system.
For a row of n dowels arranged parallel to the direction of the grain (α = 0°) at a distance a_1, the characteristic effective load-bearing capacity is equal to:

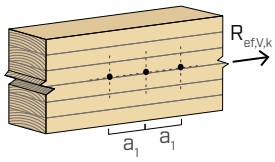

$$R_{ef,V,k} = n_{ef} \cdot R_{V,k}$$

The n_{ef} value is given in the table below as a function of n and a_1.

		a_1(*) [mm]								
		40	**50**	**60**	**70**	**80**	**90**	**100**	**120**	**140**
n	**2**	1,49	1,58	1,65	1,72	1,78	1,83	1,88	1,97	2,00
	3	2,15	2,27	2,38	2,47	2,56	2,63	2,70	2,83	2,94
	4	2,79	2,95	3,08	3,21	3,31	3,41	3,50	3,67	3,81
	5	3,41	3,60	3,77	3,92	4,05	4,17	4,28	4,48	4,66
	6	4,01	4,24	4,44	4,62	4,77	4,92	5,05	5,28	5,49

(*)For intermediate a_1 values a linear interpolation is possible.

STRUCTURAL VALUES

GENERAL PRINCIPLES

- Characteristic values according to EN 1995:2014.
- Design values can be obtained from characteristic values as follows:

$$R_d = \frac{R_k \cdot k_{mod}}{\gamma_M}$$

The coefficients γ_M and k_{mod} should be taken according to the current regulations used for the calculation.

- Mechanical strength values and dowels geometry comply with CE marking according to EN 14592.
- The values provided are calculated using 5 mm thick plates and a 6 mm thick milled cut in the wood. Values are relative to a single SBD dowel.
- Dimensioning and verification of timber elements and steel plates must be carried out separately.
- The dowels must be positioned in accordance with the minimum distances.
- The effective length of SBD dowels (L ≥ 95 mm) takes into account the diameter reduction in the vicinity of the self-drilling tip.

NOTES

- For the calculation process a timber characteristic density ρ_k = 385 kg/m^3 has been considered.

  For different ρ_k values, the strength on the table on the timber side can be converted by the $k_{dens,v}$ coefficient.

  $$R'_{V,k} = k_{dens,v} \cdot R_{V,k}$$

ρ_k [kg/m^3]	350	380	**385**	405	425	430	440
C-GL	*C24*	*C30*	*GL24h*	*GL26h*	*GL28h*	*GL30h*	*GL32h*
$k_{dens,v}$	0,90	0,98	1,00	1,02	1,05	1,05	1,07

Strength values thus determined may differ, for higher safety standards, from those resulting from an exact calculation.

INSTALLATION

It is suggested to have **a milling in the wood equal to the thickness of the plate, increased by at least 1-2 mm**, placing SHIM spacers between the wood and the plate to centre it in the milling.
In this way, the steel residue from the drilling of the metal has an outlet to escape and does not obstruct the passage of the drill through the plate, thus avoiding overheating of the plate and timber and also preventing the generation of smoke during installation.

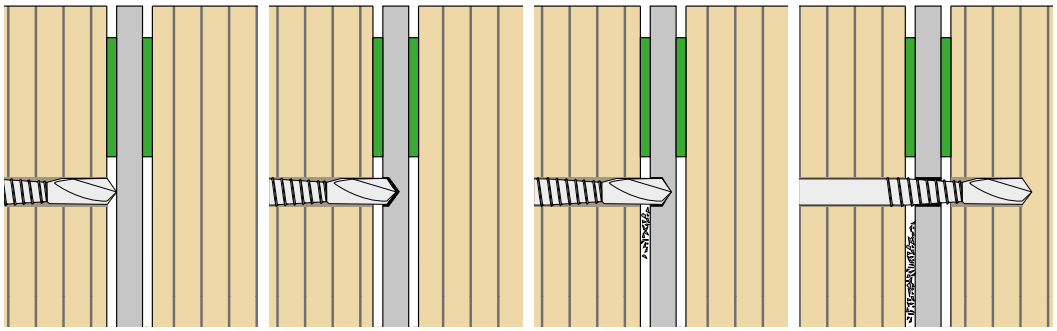

Cutter increased by 1 mm on each side.

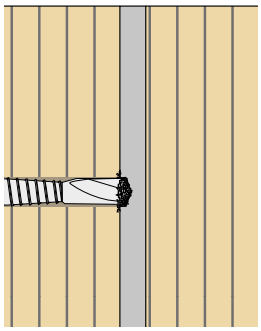

Shavings obstructing the holes in the steel during drilling (spacers not installed).

To avoid breakage of the tip at the moment of pin-plate contact, it is recommended to **reach the plate slowly, pushing with a lower force until the moment of impact and then increasing it to the recommended value** (40 kg for top-down applications and 25 kg for horizontal installations). Try to keep the dowel as perpendicular as possible to the surface of the timber and the plate.



Intact tip after correct installation of the dowel.



Broken (cut) tip due to excessive force during impact with metal.

If the steel plate is too hard, the dowel tip may shrink significantly or even melt. In this case, it is advisable to check the material certificates for any heat treatment or hardness tests performed. Try decreasing the force applied or alternatively changing the type of plate.



Tip melted during installation on a too hard plate without spacers between timber and plate.



Reduction of the tip when drilling the plate due to the high hardness of the plate.

STA

SMOOTH DOWEL

CE
EN 14592

HIGH-RESISTANCE STEEL
Dowel Ø16 and Ø20 made of S355 steel grade to provide higher shear strength to the standard sizes used in structural design.

TAPERED TIP
The end is narrowed for easy insertion inside the prepared hole in the timber. Available in 1,0 m long version.

FOR SEISMIC ZONES
Available upon request in high bond steel and geometry designed to avoid pull-out when used in seismic areas.

STAINLESS STEEL VERSION
Available in A2 | AISI304 stainless steel for outdoor structural applications.

USA, Canada and more design values available online.



STA STAS

DIAMETER [mm]	7,5	8 – 20	
LENGTH [mm]	55	60 – 1000	
MATERIAL			
Zn ELECTRO PLATED	S235-S355 electrogalvanized carbon steel	SC2	C2 T2
A2 AISI 304	A2 stainless steel	SC3	C4 T4

EXTERNAL LOADS

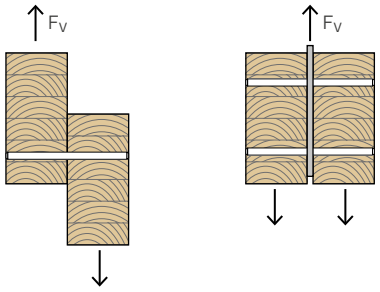



FIELDS OF USE

Assembly and structural connection of timber components for timber-to-timber and timber-to-steel shear connections
- solid timber and glulam
- CLT, LVL
- timber based panels

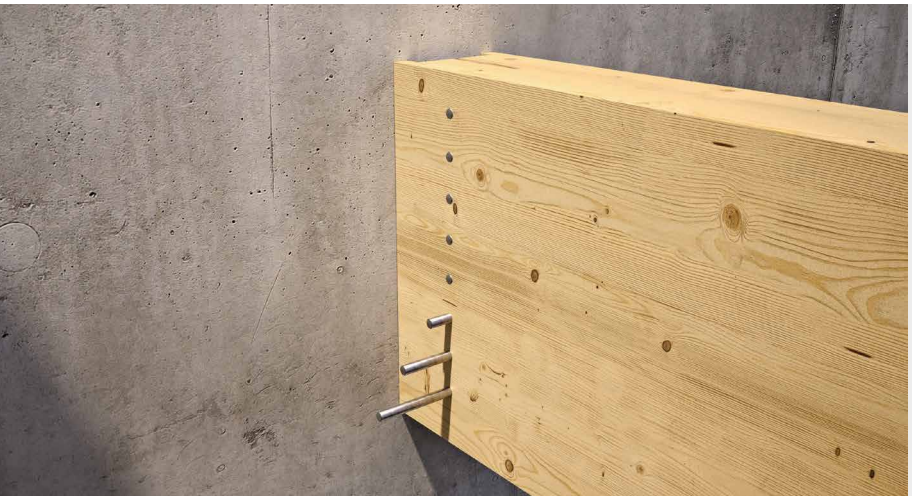

LARGE STRUCTURES ALSO OUTDOOR

Stainless steel A2 version suitable for outdoor applications up to 1 km from the sea and on class T4 acid wood.

TIMBER-TO-METAL

Ideal for being used with ALU and ALUMEGA brackets in realizing concealed joints. When used with wood taps it meets the fire safety requirements and provides an optimal aesthetic appearance.

CODES AND DIMENSIONS

Zn ELECTRO PLATED

STA - smooth dowel made of S235-S355 carbon steel

d [mm]	d [in]	CODE	L [mm]	L [in]	steel	pcs
8	0.32	STA860B	60	2 3/8	S235	100
		STA880B	80	3 1/8	S235	100
		STA8100B	100	4	S235	100
		STA8120B	120	4 3/4	S235	100
		STA8140B	140	5 1/2	S235	100
12	0.48	STA1260B	60	2 3/8	S235	50
		STA1270B	70	2 3/4	S235	50
		STA1280B	80	3 1/8	S235	50
		STA1290B	90	3 1/2	S235	50
		STA12100B	100	4	S235	50
		STA12110B	110	4 3/8	S235	50
		STA12120B	120	4 3/4	S235	50
		STA12130B	130	5 1/8	S235	50
		STA12140B	140	5 1/2	S235	25
		STA12150B	150	6	S235	25
		STA12160B	160	6 1/4	S235	25
		STA12170B	170	6 3/4	S235	25
		STA12180B	180	7 1/8	S235	25
		STA12200B	200	8	S235	25
		STA12220B	220	8 5/8	S235	25
		STA12240B	240	9 1/2	S235	25
		STA12260B	260	10 1/4	S235	25
		STA12280B	280	11	S235	25
		STA12320B	320	12 5/8	S235	25
		STA12340B	340	13 3/8	S235	25
12	0.48	STA121000B	1000	39 3/8	S235	1
16	0.63	STA1680B	80	3 1/8	S355	25
		STA16100B	100	4	S355	25
		STA16110B	110	4 3/8	S355	25
		STA16120B	120	4 3/4	S355	25
		STA16130B	130	5 1/8	S355	25
		STA16140B	140	5 1/2	S355	25
		STA16150B	150	6	S355	25
		STA16160B	160	6 1/4	S355	15
		STA16170B	170	6 3/4	S355	15
		STA16180B	180	7 1/8	S355	15
		STA16190B	190	7 1/2	S355	15
		STA16200B	200	8	S355	15
		STA16220B	220	8 5/8	S355	15
		STA16240B	240	9 1/2	S355	15
		STA16260B	260	10 1/4	S355	10
		STA16280B	280	11	S355	10
		STA16300B	300	11 3/4	S355	10
		STA16320B	320	12 5/8	S355	10
		STA16340B	340	13 3/8	S355	10
		STA16360B	360	14 1/4	S355	10
		STA16380B	380	15	S355	10
		STA16400B	400	15 3/4	S355	10
		STA16500B	500	19 3/4	S355	10
16	0.63	STA161000B	1000	39 3/8	S355	1
20	0.79	STA20120B	120	4 3/4	S355	10
		STA20140B	140	5 1/2	S355	10
		STA20160B	160	6 1/4	S355	10
		STA20180B	180	7 1/8	S355	10
		STA20190B	190	7 1/2	S355	10
		STA20200B	200	8	S355	10
		STA20220B	220	8 5/8	S355	10
		STA20240B	240	9 1/2	S355	10
		STA20260B	260	10 1/4	S355	5
		STA20300B	300	11 3/4	S355	5
		STA20320B	320	12 5/8	S355	5
		STA20360B	360	14 1/4	S355	5
		STA20400B	400	15 3/4	S355	5
20	0.79	STA201000B	1000	39 3/8	S355	1

Available upon request the STAS high bond steel and geometry designed to avoid pull-out when used in seismic areas (e.g. STAS16200).
Minimum quantity: 1000 pcs



A2 AISI 304

STA A2 | AISI304 - stainless steel smooth dowel[1]

d [mm]	d [in]	CODE	L [mm]	L [in]	pcs
12	0.48	STA12100A2	100	4	25
		STA12120A2	120	4 3/4	25
		STA12140A2	140	5 1/2	25
		STA12160A2	160	6 1/4	25
		STA12180A2	180	7 1/8	25
		STA12200A2	200	8	25
		STA12220A2	220	8 5/8	25
		STA12240A2	240	9 1/2	25
		STA12260A2	260	10 1/4	25
16	0.63	STA16120A2	120	4 3/4	25
		STA16140A2	140	5 1/2	10
		STA16150A2	150	6	10
		STA16160A2	160	6 1/4	10
		STA16180A2	180	7 1/8	10
		STA16200A2	200	8	10
		STA16220A2	220	8 5/8	10
		STA16240A2	240	9 1/2	10
		STA16260A2	260	10 1/4	10
		STA16280A2	280	11	10
		STA16300A2	300	11 3/4	10
		STA20160A2	160	6 1/4	10
		STA20180A2	180	7 1/8	10
		STA20200A2	200	8	10
		STA20220A2	220	8 5/8	10
		STA20240A2	240	9 1/2	10
20	0.79	STA20260A2	260	10 1/4	5
		STA20280A2	280	11	5
		STA20300A2	300	11 3/4	5
		STA20320A2	320	12 5/8	5
		STA20340A2	340	13 3/8	5
		STA20360A2	360	14 1/4	5
		STA20380A2	380	15	5

[1] Not holding CE marking.
STA A2 | AISI304 codes are only available on request, with an estimated lead time of 30 days.

GEOMETRY AND MECHANICAL CHARACTERISTICS

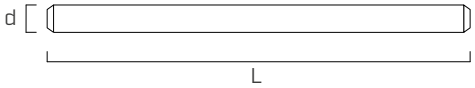

Nominal diameter	d	[mm]	8	12	16	20
			S235	S235	S355	S355
Steel	$f_{u,k,min}$	[N/mm^2]	360	360	470	470
	$f_{y,k,min}$	[N/mm^2]	235	235	355	355
Characteristic yield moment	$M_{y,k}$	[Nm]	24,1	69,1	191,0	340,0

Mechanical parameters according to CE marking, in accordance with EN 14592.

MINIMUM DISTANCES FOR DOWELS SUBJECT TO SHEAR

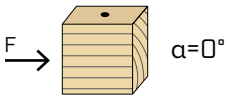

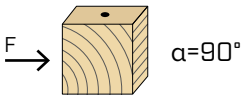

d	[mm]		8	12	16	20
a_1	[mm]	**5·d**	40	60	80	100
a_2	[mm]	**3·d**	24	36	48	60
$a_{3,t}$	[mm]	**max(7·d ; 80 mm)**	80	84	112	140
$a_{3,c}$	[mm]	**max(3,5·d ; 40 mm)**	40	42	56	70
$a_{4,t}$	[mm]	**3·d**	24	36	48	60
$a_{4,c}$	[mm]	**3·d**	24	36	48	60

d	[mm]		8	12	16	20
a_1	[mm]	**3·d**	24	36	48	60
a_2	[mm]	**3·d**	24	36	48	60
$a_{3,t}$	[mm]	**max(7·d ; 80 mm)**	80	84	112	140
$a_{3,c}$	[mm]	**max(7·d ; 80 mm)**	80	84	112	140
$a_{4,t}$	[mm]	**4·d**	32	48	64	80
$a_{4,c}$	[mm]	**3·d**	24	36	48	60

α = load-to-grain angle
d = nominal dowel diameter

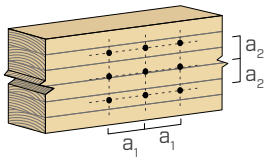

stressed end
-90° < α < 90°

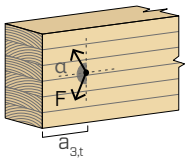

unloaded end
90° < α < 270°

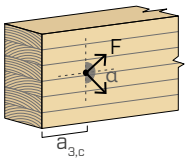

stressed edge
0° < α < 180°

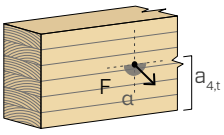

unload edge
180° < α < 360°

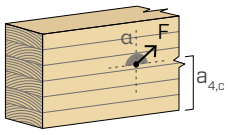

NOTES
- Minimum distances FOR CONNECTORS SUBJECTED TO SHEAR STRESS in accordance with EN 1995:2014.

EFFECTIVE NUMBER FOR SHEAR-STRESSED DOWELS

The load-bearing capacity of a connection made with several dowels, all of the same type and size, may be lower than the sum of the load-bearing capacities of the individual connection system.
For a row of n dowels arranged parallel to the direction of the grain (α = 0°) at a distance a_1, the characteristic effective load-bearing capacity is equal to:

$$R_{ef,V,k} = n_{ef} \cdot R_{V,k}$$

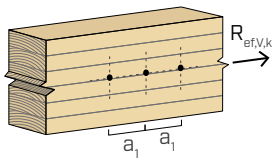

The n_{ef} value is given in the table below as a function of n and a_1.

		a_1(*) [mm]										
		4·d	5·d	6·d	7·d	8·d	9·d	10·d	11·d	12·d	13·d	≥ 14·d
n	2	1,39	1,47	1,54	1,60	1,65	1,70	1,75	1,79	1,83	1,87	1,90
	3	2,00	2,12	2,22	2,30	2,38	2,45	2,52	2,58	2,63	2,69	2,74
	4	2,59	2,74	2,87	2,98	3,08	3,18	3,26	3,34	3,41	3,48	3,55
	5	3,17	3,35	3,51	3,65	3,77	3,88	3,99	4,08	4,17	4,26	4,34
	6	3,74	3,95	4,13	4,30	4,44	4,58	4,70	4,81	4,92	5,02	5,11

(*)For intermediate a_1 values a linear interpolation is possible.

STRUCTURAL VALUES | TIMBER-TO-STEEL AND ALUMINIUM

1 INTERNAL PLATE - SHEAR $R_{v,k}$

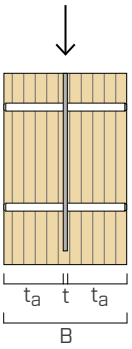

d_1	L	B	t_a	$R_{v,k}$ [kN] load-to-grain angle				
[mm]	[mm]	[mm]	[mm]	0°	30°	45°	60°	90°
8	60	60	27	7,56	7,00	6,54	6,16	5,84
	80	80	37	8,90	8,14	7,53	7,02	6,59
	100	100	47	10,46	9,51	8,74	8,10	7,56
	120	120	57	10,89	10,30	9,80	9,28	8,63
	140	140	67	10,89	10,30	9,80	9,36	8,98
12	60	60	27	13,88	12,93	12,16	11,52	10,99
	70	70	32	14,43	13,34	12,46	11,75	11,15
	80	80	37	15,15	13,92	12,93	12,13	11,46
	90	90	42	16,01	14,62	13,52	12,62	11,88
	100	100	47	16,96	15,42	14,20	13,20	12,38
	110	110	52	17,99	16,29	14,94	13,85	12,95
	120	120	57	19,07	17,21	15,75	14,55	13,57
	130	130	62	20,19	18,18	16,59	15,29	14,22
	140	140	67	21,36	19,18	17,46	16,07	14,91
	150	150	72	22,08	20,21	18,37	16,87	15,63
	160	160	77	22,08	20,75	19,30	17,70	16,37
	170	170	82	22,08	20,75	19,63	18,54	17,13
	180	180	87	22,08	20,75	19,63	18,68	17,85
	200	200	97	22,08	20,75	19,63	18,68	17,85
	220	220	107	22,08	20,75	19,63	18,68	17,85
	240	240	117	22,08	20,75	19,63	18,68	17,85
16	80	80	37	25,77	23,90	22,41	21,20	19,75
	100	100	47	27,03	24,79	23,04	21,62	20,46
	110	110	52	27,92	25,48	23,57	22,04	20,79
	120	120	57	28,93	26,28	24,22	22,57	21,22
	130	130	62	30,05	27,19	24,97	23,19	21,73
	140	140	67	31,25	28,17	25,78	23,88	22,32
	150	150	72	32,51	29,22	26,67	24,63	22,96
	160	160	77	33,83	30,32	27,60	25,43	23,66
	170	170	82	35,20	31,47	28,58	26,28	24,40
	180	180	87	36,62	32,66	29,60	27,16	25,17
	190	190	92	38,06	33,88	30,65	28,08	25,98
	200	200	97	39,54	35,14	31,74	29,03	26,82
	220	220	107	41,41	37,72	33,97	30,99	28,55
	240	240	117	41,41	38,66	36,28	33,02	30,37
20	120	120	57	39,26	35,74	33,03	30,89	29,14
	140	140	67	41,45	37,40	34,32	31,88	29,91
	160	160	77	44,07	39,48	35,99	33,24	31,03
	180	180	87	47,01	41,85	37,95	34,88	32,41
	190	190	92	48,57	43,13	39,01	35,78	33,18
	200	200	97	50,17	44,45	40,12	36,72	33,99
	220	220	107	53,51	47,22	42,45	38,73	35,73
	240	240	117	56,99	50,11	44,92	40,85	37,58

STAS | IMPROVED BOND DOWEL FOR SEISMIC LOADS

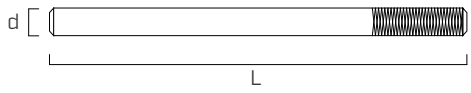

Knurled dowel available on request. Knurling limits the displacement of the dowels from the joint during an earthquake, as stipulated in Eurocode 8, and allows for a pull-out strength of 1 kN, as stipulated in EN 14592:2022.



STAS - WITHDRAWAL VALUES

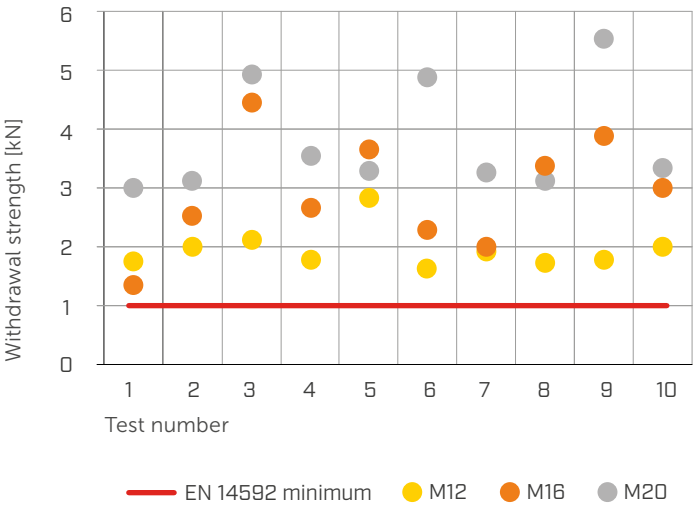

1

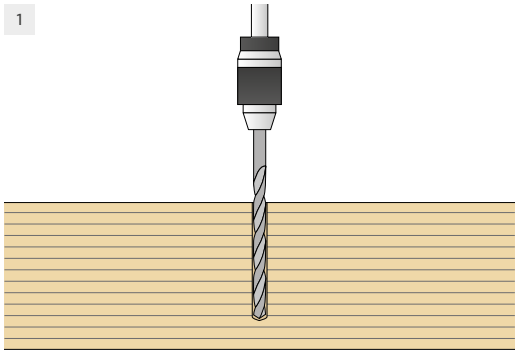

Make a pre-drilling hole with a diameter equal to the diameter of the dowel using a drill press or CNC machine. The hole must be perfectly perpendicular.

2

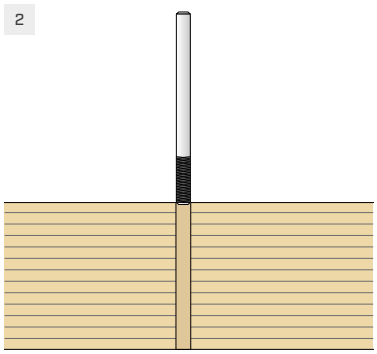

Clean the hole and place the dowel with the knurling in contact with the timber.

3

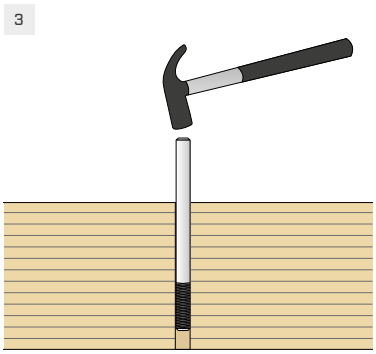

Drive the dowel into the hole using a hammer.

GENERAL PRINCIPLES

- Characteristic values according to EN 1995-1-1.
- Design values can be obtained from characteristic values as follows:

$$R_d = \frac{R_k \cdot k_{mod}}{\gamma_M}$$

- The coefficients γ_M and k_{mod} should be taken according to the current regulations used for the calculation.
- Mechanical strength values and dowels geometry comply with CE marking according to EN 14592.
- The values provided are calculated using 5 mm thick plates and a 6 mm thick milled cut in the wood. Values are relative to a single STA dowel.
- Sizing and verification of the wooden elements and steel plates must be done separately.
- The bolts must be positioned in accordance with the minimum distances.

NOTES

- For the calculation process a timber characteristic density ρ_k = 385 kg/m^3 has been considered.

  For different ρ_k values, the strength on the table on the timber side can be converted by the $k_{dens,v}$ coefficient.

$$R'_{V,k} = k_{dens,v} \cdot R_{V,k}$$

ρ_k [kg/m^3]	350	380	**385**	405	425	430	440
C-GL	*C24*	*C30*	*GL24h*	*GL26h*	*GL28h*	*GL30h*	*GL32h*
$k_{dens,v}$	0,90	0,98	1,00	1,02	1,05	1,05	1,07

Strength values thus determined may differ, for higher safety standards, from those resulting from an exact calculation.

KOS

HEXAGONAL HEAD BOLT

CE
EN 14592

CE MARKING
Metal connector with cylindrical shank with CE marking to EN 14592 to guarantee suitability for use.

HIGH RESISTANCE
Hexagonal head bolt in strength class 8.8 supplied with an incorporated nut (for the carbon steel version).

STAINLESS STEEL VERSION
Also available in A2 | AISI 304.austenitic stainless steel. Suitable for outdoor applications (SC3) up to 1 km from the sea and on class T4 acid wood.



KOS | KOS A2

DIAMETER [mm]	7,5	12		20
LENGTH [mm]	55	100	500	1000

MATERIAL

Zn ELECTRO PLATED	electro-galvanised carbon steel class 8.8	SC2	C2	T2
A2 AISI 304	A2 stainless steel	SC3	C4	T4

EXTERNAL LOADS

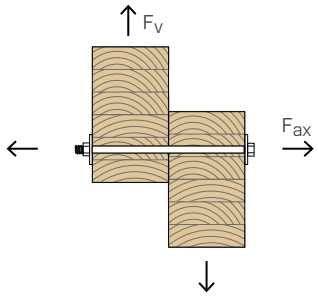



FIELDS OF USE

Assembly and structural connection of timber components for timber-to-timber and timber-to-steel shear connections
- solid timber and glulam
- CLT, LVL
- timber based panels

CODES AND DIMENSIONS

KOS - hexagonal head bolt with nut

steel class 8.8 - electrogalvanized - DIN 601

Zn ELECTRO PLATED

d [mm] *[in]*	CODE	L [mm]	*L [in]*	b [mm]	A_{max} [mm]	pcs
M12 SW19 *0.48*	KOS12100B	100	*4*	30	75	25
	KOS12120B	120	*4 3/4*	30	95	25
	KOS12140B	140	*5 1/2*	36	115	25
	KOS12160B	160	*6 1/4*	36	135	25
	KOS12180B	180	*7 1/8*	36	155	25
	KOS12200B	200	*8*	36	175	25
	KOS12220B	220	*8 5/8*	49	195	15
	KOS12240B	240	*9 1/2*	49	215	15
	KOS12260B	260	*10 1/4*	49	235	15
	KOS12280B	280	*11*	49	255	15
	KOS12300B	300	*11 3/4*	49	275	15
	KOS12320B	320	*12 5/8*	49	295	15
	KOS12340B	340	*13 3/8*	49	315	15
	KOS12360B	360	*14 1/4*	49	335	15
	KOS12380B	380	*15*	49	355	15
	KOS12400B	400	*15 3/4*	49	375	15
M16 SW24 *0.63*	KOS16140B	140	*5 1/2*	44	105	15
	KOS16160B	160	*6 1/4*	44	125	15
	KOS16180B	180	*7 1/8*	44	145	15
	KOS16200B	200	*8*	44	165	15
	KOS16220B	220	*8 5/8*	57	185	15
	KOS16240B	240	*9 1/2*	57	205	10
	KOS16260B	260	*10 1/4*	57	225	10
	KOS16280B	280	*11*	57	245	10
	KOS16300B	300	*11 3/4*	57	265	10
	KOS16320B	320	*12 5/8*	57	285	10
	KOS16340B	340	*13 3/8*	57	305	10
	KOS16360B	360	*14 1/4*	57	325	5
	KOS16380B	380	*15*	57	345	5
	KOS16400B	400	*15 3/4*	57	365	5
	KOS16420B	420	*16 9/16*	57	385	5
	KOS16440B	440	*17 1/4*	57	405	5
	KOS16460B	460	*18 1/8*	57	425	5
	KOS16500B	500	*19 3/4*	57	465	5

d [mm] *[in]*	CODE	L [mm]	*L [in]*	b [mm]	A_{max} [mm]	pcs
M20 SW30 *0.79*	KOS20140B	140	*5 1/2*	52	95	10
	KOS20160B	160	*6 1/4*	52	115	10
	KOS20180B	180	*7 1/8*	52	135	10
	KOS20200B	200	*8*	52	155	5
	KOS20220B	220	*8 5/8*	65	175	5
	KOS20240B	240	*9 1/2*	65	195	5
	KOS20260B	260	*10 1/4*	65	215	5
	KOS20280B	280	*11*	65	235	5
	KOS20300B	300	*11 3/4*	65	255	5
	KOS20320B	320	*12 5/8*	65	275	5
	KOS20340B	340	*13 3/8*	65	295	5
	KOS20360B	360	*14 1/4*	65	315	5
	KOS20380B	380	*15*	65	335	5
	KOS20400B	400	*15 3/4*	65	355	5
	KOS20420B	420	*16 9/16*	65	375	5
	KOS20440B	440	*17 1/4*	65	395	5
	KOS20460B	460	*18 1/8*	65	415	5

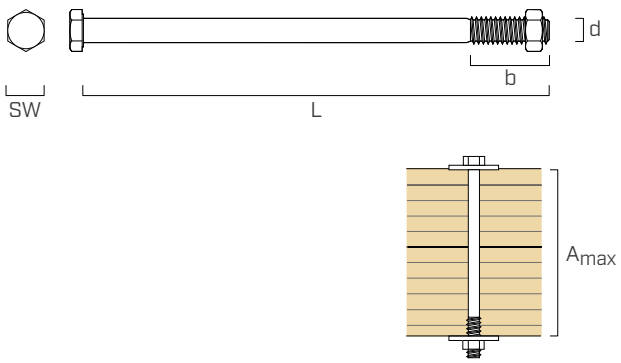

The maximum fastening thickness that can be fastened A_{max} is calculated considering the use of MUT934 nut (see page 178) and two ULS 440 washers (see page 176).

KOS A2 | AISI304 - hexagonal head bolt[1]

A2 | AISI304 - DIN 931 stainless steel

A2 AISI 304

d [mm] *[in]*	CODE	L [mm]	*L [in]*	A_{max} [mm]	pcs
M12 SW19 *0.48*	AI60112100	100	*4*	75	25
	AI60112120	120	*4 3/4*	95	25
	AI60112140	140	*5 1/2*	115	25
	AI60112160	160	*6 1/4*	135	10
	AI60112180	180	*7 1/8*	155	10
	AI60112200	200	*8*	175	10
	AI60112220	220	*8 5/8*	195	10
	AI60112240	240	*9 1/2*	215	10
	AI60112260	260	*10 1/4*	235	10
M16 SW24 *0.63*	AI60116120	120	*4 3/4*	90	25
	AI60116140	140	*5 1/2*	110	25
	AI60116160	160	*6 1/4*	130	25
	AI60116180	180	*7 1/8*	150	10
	AI60116200	200	*8*	170	10
	AI60116220	220	*8 5/8*	190	10
	AI60116240	240	*9 1/2*	210	10
	AI60116260	260	*10 1/4*	230	10
	AI60116280	280	*11*	250	10
	AI60116300	300	*11 3/4*	270	10

d [mm] *[in]*	CODE	L [mm]	*L [in]*	A_{max} [mm]	pcs
M20 SW30 *0.79*	AI60120160	160	*6 1/4*	125	10
	AI60120180	180	*7 1/8*	145	10
	AI60120200	200	*8*	165	10
	AI60120220	220	*8 5/8*	185	10
	AI60120240	240	*9 1/2*	205	10
	AI60120260	260	*10 1/4*	225	10
	AI60120280	280	*11*	245	10
	AI60120300	300	*11 3/4*	265	10
	AI60120320	320	*12 5/8*	285	5
	AI60120340	340	*13 3/8*	305	5
	AI60120360	360	*14 1/4*	325	5
	AI60120380	380	*15*	345	5
	AI60120400	400	*15 3/4*	365	5

[1]Not holding CE marking



The maximum fastening thickness that can be fastened A_{max} is calculated considering the use of MUTAI934 nut (see page 178) and two ULS AI 9021 washers (see page 177).

GEOMETRY AND MECHANICAL CHARACTERISTICS | KOS

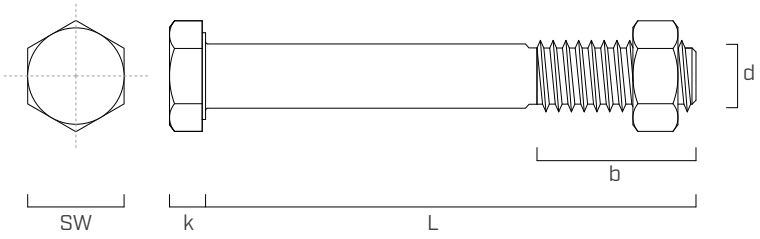

GEOMETRY

Nominal diameter	**d_1**	**[mm]**		**M12**	**M16**	**M20**
Wrench	SW	[mm]		SW 19	SW 24	SW 30
Head thickness	k	[mm]		7,50	10,00	12,50
Thread length	b	[mm]	L ≤ 125 mm	30	38	46
		[mm]	125 < L ≤ 200 mm	36	44	52
		[mm]	L > 200 mm	49	57	65

CHARACTERISTIC MECHANICAL PARAMETERS

			KOS			KOS A2		
Nominal diameter	**d_1**	**[mm]**	**M12**	**M16**	**M20**	**M12**	**M16**	**M20**
Yield moment	$M_{y,k}$	[Nm]	153,0	324,0	579,0	134,0	284,0	507,0
Steel ultimate strength	$f_{u,k}$	[N/mm^2]	800	800	800	700	700	700
Steel type	-	-	8,8	8,8	8,8	A2-70	A2-70	A2-70

MINIMUM DISTANCES FOR BOLTS SUBJECT TO SHEAR

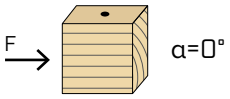

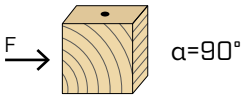

d	**[mm]**		**12**	**16**	**20**
a_1	[mm]	**5·d**	60	80	100
a_2	[mm]	**4·d**	48	64	80
$a_{3,t}$	[mm]	**max (7·d ; 80 mm)**	84	112	140
$a_{3,c}$	[mm]	**4·d**	48	64	80
$a_{4,t}$	[mm]	**3·d**	36	48	60
$a_{4,c}$	[mm]	**3·d**	36	48	60

d	**[mm]**		**12**	**16**	**20**
a_1	[mm]	**4·d**	48	64	80
a_2	[mm]	**4·d**	48	64	80
$a_{3,t}$	[mm]	**max (7·d ; 80 mm)**	84	112	140
$a_{3,c}$	[mm]	**7·d**	84	112	140
$a_{4,t}$	[mm]	**4·d**	48	64	80
$a_{4,c}$	[mm]	**3·d**	36	48	60

α = load-to-grain angle
d = nominal bolt diameter

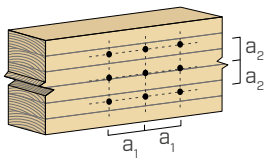

stressed end
-90° < α < 90°

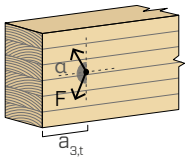

unloaded end
90° < α < 270°

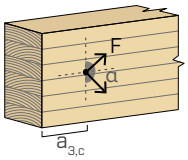

stressed edge
0° < α < 180°

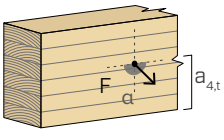

unload edge
180° < α < 360°

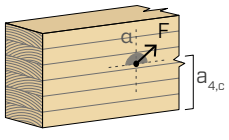

NOTES

- The minimum distances are compliant with EN 1995-1-1.

STRUCTURAL VALUES | KOS

NODE WITH 3 WOODEN ELEMENTS

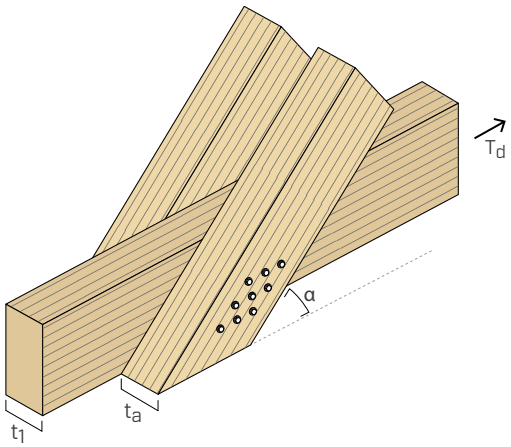

d [mm]	L [mm]	t_a [mm]	t_1 [mm]	$R_{v,k,0°}$ [kN]	$R_{v,k,30°}$ [kN]	$R_{v,k,45°}$ [kN]	$R_{v,k,60°}$ [kN]	$R_{v,k,90°}$ [kN]
12	220	60	60	20,00	20,00	20,00	19,27	18,53
	240	60	80	22,46	21,18	20,14	19,27	18,53
	260	60	100	22,46	21,18	20,14	19,27	18,53
	280	60	120	22,46	21,18	20,14	19,27	18,53
	300	80	100	26,02	24,27	22,84	21,65	20,64
	320	80	120	26,02	24,27	22,84	21,65	20,64
	340	80	140	26,02	24,27	22,84	21,65	20,64
	360	80	160	26,02	24,27	22,84	21,65	20,64
	380	100	140	26,76	26,03	25,36	24,42	23,14
	400	120	120	26,76	26,03	25,36	24,75	24,19
16	280	80	80	33,94	33,94	33,81	32,16	30,52
	300	80	100	38,13	35,73	33,81	32,16	30,52
	320	80	120	38,13	35,73	33,81	32,16	30,52
	340	80	140	38,13	35,73	33,81	32,16	30,52
	360	80	160	38,13	35,73	33,81	32,16	30,52
	380	100	140	42,67	39,60	37,16	35,16	33,48
	400	100	160	42,67	39,60	37,16	35,16	33,48
	420	100	180	42,67	39,60	37,16	35,16	33,48
	440	100	200	42,67	39,60	37,16	35,16	33,48
	460	120	180	44,65	43,32	40,91	38,47	36,44
	500	120	220	44,65	43,32	40,91	38,47	36,44
20	340	80	120	51,04	48,00	45,53	43,11	41,09
	360	100	100	50,51	50,51	48,85	46,39	43,97
	380	100	120	55,80	51,90	48,85	46,39	43,97
	400	100	140	55,80	51,90	48,85	46,39	43,97
	420	100	160	55,80	51,90	48,85	46,39	43,97
	440	100	180	55,80	51,90	48,85	46,39	43,97
	460	120	160	61,20	56,44	52.72	49,72	47,24

GENERAL PRINCIPLES

- Characteristic values according to EN 1995:2014.
- Design values can be obtained from characteristic values as follows:

$$R_d = \frac{R_k \cdot k_{mod}}{\gamma_M}$$

The coefficients γ_M and k_{mod} should be taken according to the current regulations used for the calculation.

- Mechanical strength values and bolts geometry comply with CE marking according to EN 14592.
- The values given are calculated considering a force-grain angle in the side elements of 0°, 30°, 45°, 60° and 90°. Values are relative to a single KOS bolt.
- Dimensioning and verification of timber elements and steel plates must be carried out separately.
- The bolts must be positioned in accordance with the minimum distances.

NOTES

- For the calculation process a timber characteristic density ρ_k = 385 kg/m^3 has been considered.

  For different ρ_k values, the strength on the table on the timber side can be converted by the $k_{dens,v}$ coefficient.

$$R'_{V,k} = k_{dens,v} \cdot R_{V,k}$$

ρ_k [kg/m^3]	350	380	**385**	405	425	430	440
C-GL	*C24*	*C30*	*GL24h*	*GL26h*	*GL28h*	*GL30h*	*GL32h*
$k_{dens,v}$	0,90	0,98	1,00	1,02	1,05	1,05	1,07

Strength values thus determined may differ, for higher safety standards, from those resulting from an exact calculation.

- The calculation was made taking into account the rope effect of the bolt with DIN 9021 washers.

STRUCTURAL VALUES | KOS

NODE WITH 2 METAL PLATES IN A WOODEN ELEMENT

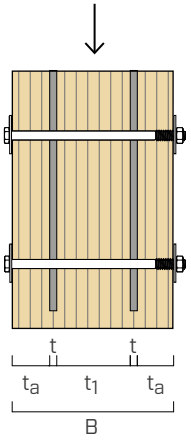

d_1	L	B	t_a	t_1	$R_{v,k}$ [kN] load-to-grain angle				
[mm]	[mm]	[mm]	[mm]	[mm]	0°	30°	45°	60°	90°
12	140	100	29	30	29,34	25,90	23,19	20,99	19,17
	160	120	39	30	34,10	31,54	28,46	25,76	23,53
	180	140	39	50	40,77	37,42	33,73	30,53	27,89
	200	160	39	70	47,43	43,31	39,00	35,31	32,25
	220	180	49	70	48,52	44,13	40,64	37,81	35,45
	240	200	49	90	51,95	48,89	45,91	42,58	39,81
	260	220	59	90	53,50	50,14	46,94	43,42	40,51
	280	240	59	110	53,50	50,14	49,04	46,52	44,38
16	140	100	29	30	37,34	32,54	28,83	25,88	23,48
	160	120	29	50	45,82	39,93	35,39	31,77	28,82
	180	140	39	50	54,31	47,33	41,94	37,65	34,16
	200	160	39	70	62,80	54,72	48,49	43,53	39,49
	220	180	39	90	71,28	62,12	55,04	49,42	44,83
	240	200	49	90	78,33	69,52	61,60	55,30	50,17
	260	220	59	90	79,56	71,82	65,81	61,00	55,51
	280	240	59	110	86,02	79,21	72,36	66,88	60,84
20	160	100	28	32	37,34	32,54	28,83	25,88	23,48
	180	120	29	50	45,82	39,93	35,39	31,77	28,82
	200	140	29	70	54,31	47,33	41,94	37,65	34,16
	220	160	39	70	62,80	54,72	48,49	43,53	39,49
	240	180	49	70	71,28	62,12	55,04	49,42	44,83
	260	200	49	90	78,33	69,52	61,60	55,30	50,17
	280	220	59	90	79,56	71,82	65,81	61,00	55,51
	300	240	59	110	86,02	79,21	72,36	66,88	60,84

GENERAL PRINCIPLES

- Characteristic values according to EN 1995:2014.
- Design values can be obtained from characteristic values as follows:

$$R_d = \frac{R_k \cdot k_{mod}}{\gamma_M}$$

The coefficients γ_M and k_{mod} should be taken according to the current regulations used for the calculation.

- Mechanical strength values and bolts geometry comply with CE marking according to EN 14592.
- The values given are calculated considering a force-grain angle of 0°, 30°, 45°, 60° and 90°. Values are relative to a single KOS bolt.
- The values provided are calculated using 5 mm thick plates and a 6 mm thick milled cut in the wood.
- Dimensioning and verification of timber elements and steel plates must be carried out separately.
- The bolts must be positioned in accordance with the minimum distances.

NOTES

- For the calculation process a timber characteristic density ρ_k = 385 kg/m^3 has been considered.

  For different ρ_k values, the strength on the table on the timber side can be converted by the $k_{dens,v}$ coefficient.

$$R'_{V,k} = k_{dens,v} \cdot R_{V,k}$$

ρ_k [kg/m^3]	350	380	**385**	405	425	430	440
C-GL	*C24*	*C30*	*GL24h*	*GL26h*	*GL28h*	*GL30h*	*GL32h*
$k_{dens,v}$	0,90	0,98	1,00	1,02	1,05	1,05	1,07

Strength values thus determined may differ, for higher safety standards, from those resulting from an exact calculation.

- The calculation was made taking into account the rope effect of the bolt with DIN 9021 washers.

KOT

ROUND HEAD BOLT

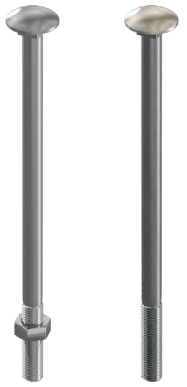

KOT KOT A2

- Round head bolt supplied with an incorporated nut (for the carbon steel version).
- Carbon steel of strength grade 4.8 for all round head bolts (KOT).
- Available in A2 | AISI304 austenitic stainless steel. Suitable for outdoor applications (SC3) up to 1 km from the sea and on class T4 acid wood.

CODES AND DIMENSIONS

KOT - round head bolt with nut

Zn ELECTRO PLATED

4.8 steel class - electrogalvanized
DIN 603 (ISO 8677)

d [mm] *[in]*	CODE	L [mm]	*L [in]*	pcs
M8 *0.32*	**KOT850**	50	*1 15/16*	200
	KOT860	60	*2 3/8*	200
	KOT870	70	*2 3/4*	200
	KOT880	80	*3 1/8*	200
	KOT890	90	*3 1/2*	200
	KOT8100	100	*4*	100
	KOT8120	120	*4 3/4*	100
	KOT8140	140	*5 1/2*	50
M10 *0.40*	**KOT10100**	100	*4*	100
	KOT10120	120	*4 3/4*	50
	KOT10130	130	*5 1/8*	50
	KOT10140	140	*5 1/2*	50
	KOT10150	150	*6*	50
	KOT10160	160	*6 1/4*	50
	KOT10180	180	*7 1/8*	50
	KOT10200	200	*8*	50
	KOT10220	220	*8 5/8*	50

d [mm] *[in]*	CODE	L [mm]	*L [in]*	pcs
M12 *0.48*	**KOT12200**	200	*8*	25
	KOT12220	220	*8 5/8*	25
	KOT12240	240	*9 1/2*	25
	KOT12260	260	*10 1/4*	25
	KOT12280	280	*11*	25
	KOT12300	300	*11 3/4*	25

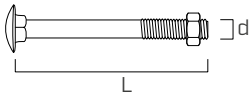

KOT A2 | AISI304 - round head bolt

A2 AISI 304

A2 | AISI304 A2-70 stainless steel
DIN 603 (ISO 8677)

d [mm] *[in]*	CODE	L [mm]	*L [in]*	pcs
M8 *0.32*	**AI603850**	50	*1 15/16*	100
	AI603860	60	*2 3/8*	100
	AI603870	70	*2 3/4*	50
	AI603880	80	*3 1/8*	50
	AI603890	90	*3 1/2*	50
	AI6038100	100	*4*	50
	AI6038120	120	*4 3/4*	50
	AI6038140	140	*5 1/2*	50
M10 *0.40*	**AI60310120**	120	*4 3/4*	50
	AI60310130	130	*5 1/8*	50
	AI60310140	140	*5 1/2*	50
	AI60310150	150	*6*	50
	AI60310160	160	*6 1/4*	50
	AI60310180	180	*7 1/8*	50
	AI60310200	200	*8*	50
	AI60310220	220	*8 5/8*	50

d [mm] *[in]*	CODE	L [mm]	*L [in]*	pcs
M12 *0.48*	**AI60312140**	140	*5 1/2*	50
	AI60312160	160	*6 1/4*	50
	AI60312180	180	*7 1/8*	50
	AI60312200	200	*8*	50
	AI60312220	220	*8 5/8*	50
	AI60312240	240	*9 1/2*	50
	AI60312280	280	*11*	50
	AI60312300	300	*11 3/4*	50

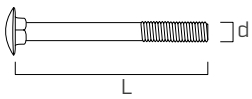

MET

THREADED RODS, NUTS AND WASHERS

- Metric threaded products for connections and joints
- Available in carbon steel and A2 austenitic stainless steel for outdoor applications (SC3) up to 1 km from the sea and on T4 class timber

MGS 1000 - 4.8

THREADED ROD

CODE	rod	L [mm]	*rod [in]*	*L [in]*	pcs
MGS10008	**M8**	1000	*0.32*	*39 3/8*	10
MGS100010	**M10**	1000	*0.40*	*39 3/8*	10
MGS100012	**M12**	1000	*0.48*	*39 3/8*	10
MGS100014	**M14**	1000	*0.56*	*39 3/8*	10
MGS100016	**M16**	1000	*0.63*	*39 3/8*	10
MGS100018	**M18**	1000	*0.71*	*39 3/8*	10
MGS100020	**M20**	1000	*0.79*	*39 3/8*	10
MGS100022	**M22**	1000	*0.87*	*39 3/8*	10
MGS100024	**M24**	1000	*0.95*	*39 3/8*	10
MGS100027	**M27**	1000	*1.07*	*39 3/8*	10
MGS100030	**M30**	1000	*1.19*	*39 3/8*	10

4.8 steel class - electrogalvanized
DIN 975

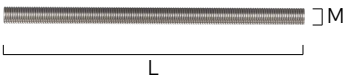

MGS 1000 - 8.8

THREADED ROD

CODE	rod	L [mm]	*rod [in]*	*L [in]*	pcs
MGS10888	**M8**	1000	*0.32*	*39 3/8*	1
MGS11088	**M10**	1000	*0.40*	*39 3/8*	1
MGS11288	**M12**	1000	*0.48*	*39 3/8*	1
MGS11488	**M14**	1000	*0.56*	*39 3/8*	1
MGS11688	**M16**	1000	*0.63*	*39 3/8*	1
MGS11888	**M18**	1000	*0.71*	*39 3/8*	1
MGS12088	**M20**	1000	*0.79*	*39 3/8*	1
MGS12488	**M24**	1000	*0.95*	*39 3/8*	1
MGS12788	**M27**	1000	*1.07*	*39 3/8*	1

8.8 steel class - electrogalvanized
DIN 975

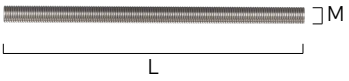

MGS 2200 - 4.8

THREADED ROD

CODE	rod	L [mm]	*rod [in]*	*L [in]*	pcs
MGS220012	**M12**	2200	*0.48*	*86 5/8*	1
MGS220016	**M16**	2200	*0.63*	*86 5/8*	1
MGS220020	**M20**	2200	*0.79*	*86 5/8*	1

4.8 steel class - electrogalvanized
DIN 975

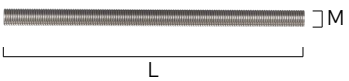

MGS AI 975

A2
AISI 304

THREADED ROD

CODE	rod	L [mm]	*rod [in]*	*L [in]*	pcs
AI9758	**M8**	1000	*0.32*	*39 3/8*	1
AI97510	**M10**	1000	*0.40*	*39 3/8*	1
AI97512	**M12**	1000	*0.48*	*39 3/8*	1
AI97516	**M16**	1000	*0.63*	*39 3/8*	1
AI97520	**M20**	1000	*0.79*	*39 3/8*	1

A2-70 (A2 | AISI304) stainless steel
DIN 975

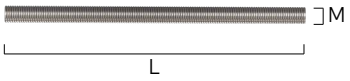

MGS RODS STRUCTURAL VALUES

TENSILE STRENGTH

					steel class		
					4.8	8,8	A2
rod	**d_1** [mm]	**d_2** [mm]	**p** [mm]	**A_{resist}** [mm^2]	**$R_{ax,k}$** [kN]	**$R_{ax,k}$** [kN]	**$R_{ax,k}$** [kN]
M8	8	6,47	1,25	36,6	**13,2**	**26,4**	**23,1**
M10	10	8,16	1,50	58,0	**20,9**	**41,8**	**36,5**
M12	12	9,85	1,75	84,3	**30,3**	**60,7**	**53,1**
M14	14	11,55	2,00	115,4	**41,6**	**83,1**	-
M16	16	13,55	2,00	156,7	**56,4**	**112,8**	**98,7**
M18	18	14,93	2,50	192,5	**69,3**	**138,6**	-
M20	20	16,93	2,50	244,8	**88,1**	**176,3**	**154,2**
M22	22	18,93	2,50	303,4	**109,2**	**218,4**	-
M24	24	20,32	3,00	352,5	**126,9**	**253,8**	-
M27	27	23,32	3,00	459,4	**165,4**	**330,8**	-
M30	30	25,71	3,50	560,6	**201,8**	**403,6**	-

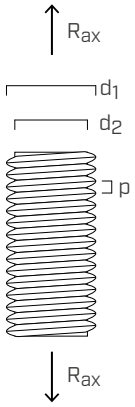

Characteristic values according to EN 1993.
The design values are obtained from the characteristic values as follows: $R_{ax,d} = R_{ax,k} / \gamma_{M2}$.
The coefficient γ_{M2} should be taken according to the current regulations used for the calculation.

ULS 9021

WASHER

CODE	rod	d_{INT} [mm]	d_{EXT} [mm]	s [mm]	*d_{INT} [in]*	*d_{EXT} [in]*	*s [in]*	pcs
ULS8242	**M8**	8,4	24,0	2,0	*0.34*	*0.95*	*0.08*	200
ULS10302	**M10**	10,5	30,0	2,5	*0.4*	*1.19*	*0.10*	200
ULS13373	**M12**	13,0	37,0	3,0	*0.5*	*1.46*	*0.12*	100
ULS15443	**M14**	15,0	44,0	3,0	*0.6*	*1.74*	*0.12*	100
ULS17503	**M16**	17,0	50,0	3,0	*0.7*	*1.97*	*0.12*	100
ULS20564	**M18**	20,0	56,0	4,0	*0.8*	*2.21*	*0.16*	50
ULS22604	**M20**	22,0	60,0	4,0	*0.9*	*2.37*	*0.16*	50

* ISO 7093 differs from DIN 9021 in the surface hardness.

HV 100 steel - electrogalvanized
DIN 9021 (ISO 7093*)

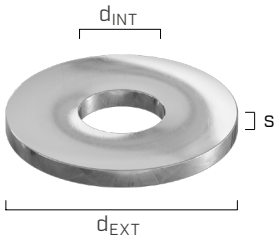

ULS 440

WASHER

CODE	rod	d_{INT} [mm]	d_{EXT} [mm]	s [mm]	*d_{INT} [in]*	*d_{EXT} [in]*	*s [in]*	pcs
ULS11343	**M10**	11,0	34,0	3,0	*0.44*	*1.34*	*0.12*	200
ULS13444	**M12**	14,0	44,0	4,0	*0.56*	*1.74*	*0.16*	200
ULS17565	**M16**	17,0	56,0	5,0	*0.67*	*2.21*	*0.20*	50
ULS22726	**M20**	22,0	72,0	6,0	*0.87*	*2.84*	*0.24*	50
ULS24806	**M22**	24,0	80,0	6,0	*0.95*	*3.15*	*0.24*	25

HV 100 steel - electrogalvanized
DIN 440 R

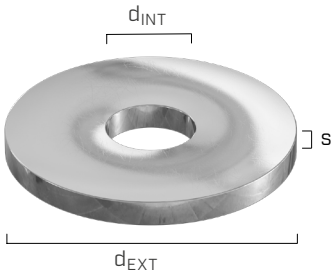

ULS 1052

WASHER

CODE	rod	d_{INT} [mm]	d_{EXT} [mm]	s [mm]	*d_{INT} [in]*	*d_{EXT} [in]*	*s [in]*	pcs
ULS14586	**M12**	14,0	58,0	6,0	*0.56*	*2.29*	*0.24*	50
ULS18686	**M16**	18,0	68,0	6,0	*0.71*	*2.68*	*0.24*	50
ULS22808	**M20**	22,0	80,0	8,0	*0.87*	*3.15*	*0.32*	25
ULS25928	**M22**	25,0	92,0	8,0	*0.99*	*3.63*	*0.32*	20
ULS271058	**M24**	27,0	105,0	8,0	*1.07*	*4.14*	*0.32*	20

HV 100-250 steel - electrogalvanized
DIN 1052

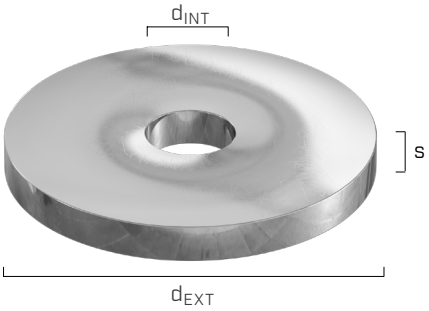

ULS 125

WASHER

CODE	rod	d_{INT} [mm]	d_{EXT} [mm]	s [mm]	*d_{INT} [in]*	*d_{EXT} [in]*	*s [in]*	pcs
ULS81616	**M8**	8,4	16,0	1,6	*0.34*	*0.63*	*0.07*	1000
ULS10202	**M10**	10,5	20,0	2,0	*0.42*	*0.79*	*0.08*	500
ULS13242	**M12**	13,0	24,0	2,5	*0.52*	*0.95*	*0.10*	500
ULS17303	**M16**	17,0	30,0	3,0	*0.67*	*1.19*	*0.12*	250
ULS21373	**M20**	21,0	37,0	3,0	*0.83*	*1.46*	*0.12*	250
ULS25444	**M24**	25,0	44,0	4,0	*0.99*	*1.74*	*0.16*	200
ULS28504	**M27**	28,0	50,0	4,0	*1.11*	*1.97*	*0.16*	100
ULS31564	**M30**	31,0	56,0	4,0	*1.23*	*2.21*	*0.16*	20

HV 100 steel - electrogalvanized
DIN 125 A (ISO 7089)

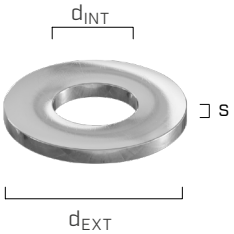

ULS AI 9021

A2
AISI 304

WASHER

CODE	rod	d_{INT} [mm]	d_{EXT} [mm]	s [mm]	*d_{INT} [in]*	*d_{EXT} [in]*	*s [in]*	pcs
AI90218	**M8**	8,4	24,0	2,0	*0.34*	*0.95*	*0.08*	500
AI902110	**M10**	10,5	30,0	2,5	*0.42*	*1.19*	*0.10*	500
AI902112	**M12**	13,0	37,0	3,0	*0.52*	*1.46*	*0.12*	200
AI902116	**M16**	17,0	50,0	3,0	*0.67*	*1.97*	*0.12*	100
AI902120	**M20**	22,0	60,0	4,0	*0.87*	*2.37*	*0.16*	50

* ISO 7093 differs from DIN 9021 in the surface hardness.

A2 | AISI304 stainless steel
DIN 9021 (ISO 7093-1*)

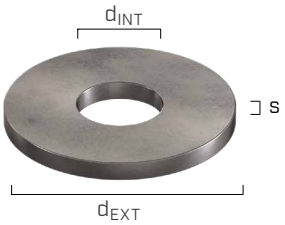

ULS WASHERS STRUCTURAL VALUES

PULL-THROUGH RESISTANCE IN THE TIMBER

rod	standard	d_{INT} [mm]	d_{EXT} [mm]	s [mm]	$R_{ax,k}$ [kN]
M10	ULS 9021	10,5	30,0	2,5	**4,65**
	ULS 440	11,0	34,0	3,0	**6,10**
	ULS 1052	-	-	-	**-**
	ULS 125	10,5	20,0	2,0	**1,71**
M12	ULS 9021	13,0	37,0	3,0	**7,07**
	ULS 440	14,0	44,0	4,0	**10,25**
	ULS 1052	14,0	58,0	6,0	**18,66**
	ULS 125	13,0	24,0	2,5	**2,40**
M16	ULS 9021	17,0	50,0	3,0	**13,02**
	ULS 440	17,0	56,0	5,0	**16,77**
	ULS 1052	18,0	68,0	6,0	**25,33**
	ULS 125	17,0	30,0	3,0	**3,60**
M20	ULS 9021	22,0	60,0	4,0	**18,35**
	ULS 440	22,0	72,0	6,0	**27,69**
	ULS 1052	22,0	80,0	8,0	**34,85**
	ULS 125	21,0	37,0	3,0	**5,47**
M24	ULS 9021	-	-	-	**-**
	ULS 440	-	-	-	**-**
	ULS 1052	27,0	105,0	8,0	**60,65**
	ULS 125	25,0	44,0	4,0	**7,72**

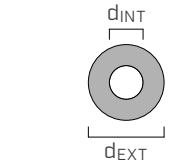

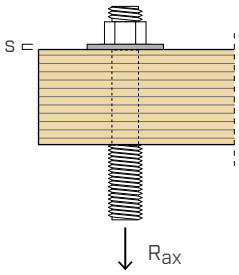

CRITICAL ISSUE: WASHER HEAD PULL-THROUGH INTO TIMBER





GENERAL PRINCIPLES:

- Characteristic values according to EN 1995-1-1.
- Design values can be obtained from characteristic values as follows:

$$R_{ax,d} = \frac{R_{ax,k} \cdot k_{mod}}{\gamma_M}$$

The coefficients γ_M and k_{mod} should be taken according to the current regulations used for the calculation.

- For the calculation process a timber characteristic density ρ_k = 385 kg/m^3 has been considered.
- The pull-through resistance of a washer is proportional to its contact surface with the timber element.

MUT 934

HEXAGONAL NUT

CODE	rod	SW [mm]	h [mm]	*h [in]*	pcs
MUT9348	**M8**	13	6,5	*1/4*	400
MUT93410	**M10**	17	8,0	*5/16*	500
MUT93412	**M12**	19	10,0	*3/8*	500
MUT93414	**M14**	22	11,0	*7/16*	200
MUT93416	**M16**	24	13,0	*1/2*	200
MUT93418	**M18**	27	15,0	*9/16*	100
MUT93420	**M20**	30	16,0	*5/8*	100
MUT93422	**M22**	32	18,0	*11/16*	50
MUT93424	**M24**	36	19,0	*3/4*	50
MUT93427	**M27**	41	22,0	*7/8*	25
MUT93430	**M30**	46	24,0	*15/16*	25

* ISO 4032 differs from DIN 934 for parameter h and, for diameters M10, M12, M14 and M22 also for the SW parameter.

8 steel class - electrogalvanized
DIN 934 (ISO 4032*)

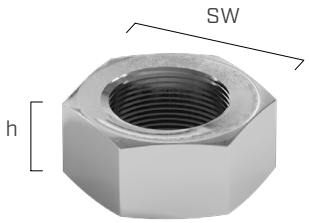

MUT 6334

CONNECTING NUT

CODE	rod	SW [mm]	h [mm]	*h [in]*	pcs
MUT633410	**M10**	17	30,0	*1 3/16*	10
MUT633412	**M12**	19	36,0	*1 7/16*	10
MUT633416	**M16**	24	48,0	*1 7/8*	25
MUT633420	**M20**	30	60,0	*2 3/8*	10

8 steel class - electrogalvanized
DIN 6334

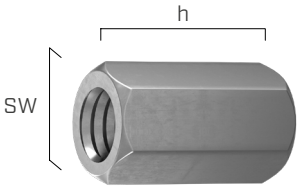

MUT 1587

BLIND NUT

CODE	rod	SW [mm]	h [mm]	*h [in]*	pcs
MUT15878S	**M8**	13	15,0	*9/16*	200
MUT158710S	**M10**	17	18,0	*11/16*	50
MUT158712S	**M12**	19	22,0	*7/8*	50
MUT158714S	**M14**	22	25,0	*1*	50
MUT158716S	**M16**	24	28,0	*1 1/8*	50
MUT158718S	**M18**	27	32,0	*1 1/4*	50
MUT158720S	**M20**	30	34,0	*1 5/16*	25
MUT158722S	**M22**	32	39,0	*1 9/16*	25
MUT158724S	**M24**	36	42,0	*1 5/8*	25

Single-piece turned nut.

6 steel class - electrogalvanized
DIN 1587

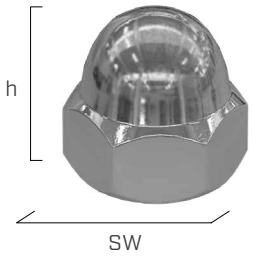

MUT AI 934

A2
AISI 304

HEXAGONAL NUT

CODE	rod	SW [mm]	h [mm]	*h [in]*	pcs
AI9348	**M8**	13	6,5	*1/4*	500
AI93410	**M10**	17	8,0	*5/16*	200
AI93412	**M12**	19	10,0	*3/8*	200
AI93416	**M16**	24	13,0	*1/2*	100
AI93420	**M20**	30	16,0	*5/8*	50

* ISO 4032 differs from DIN 934 for parameter h and, for diameters M10 and M12 also for the SW parameter.

A2-70 (A2 | AISI304) stainless steel
DIN 934 (ISO 4032*)



MUT AI 985

SELF-LOCKING NUT

A2
AISI 304

CODE	rod	SW [mm]	h [mm]	*h* *[in]*	pcs
AI9858	**M8**	13	8,0	*5/16*	500
AI98510	**M10**	17	10,0	*3/8*	200
AI98512	**M12**	19	12,0	*1/2*	200
AI98516	**M16**	24	16,0	*5/8*	100

* ISO 10511 differs from DIN 995 for parameter h and, for diameters M10 and M12 also for the SW parameter.

A2-70 (A2 | AISI304) stainless steel
DIN 985 (ISO 10511*)

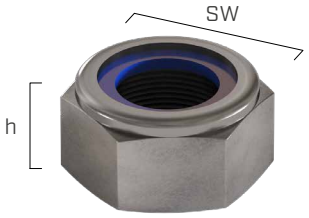

MUT AI 1587

BLIND NUT

A2
AISI 304

CODE	rod	SW [mm]	h [mm]	*h* *[in]*	pcs
AI158710	**M10**	17	18,0	*11/16*	100
AI158712	**M12**	19	22,0	*7/8*	100
AI158716	**M16**	24	28,0	*1 1/8*	50
AI158720	**M20**	30	34,0	*1 5/16*	25

Single-piece turned nut.

A2 | AISI304 stainless steel
DIN 1587



DBB

SURFACE CONNECTORS DIN 1052

- Surface connectors for shear connections, available in different sizes
- Circular metal elements ideal for connections with two shear planes

APPEL

TYPE A1 DOWEL - BILATERAL

EN 912

CODE	d_{EXT} [mm]	*d_{EXT} [in]*	pcs
APPD80	80	*3.15*	1
APPD95	95	*3.75*	1
APPD126	126	*4.97*	1



PRESS

TYPE C1 DOWEL - BILATERAL

EN 912

CODE	d_{EXT} [mm]	d_{INT} [mm]	h [mm]	s [mm]	*d_{EXT} [in]*	*d_{INT} [in]*	*h [in]*	*s [in]*	pcs
PRESSD48	50,0	17,0	13,0	1,0	*1.97*	*0.67*	*1/2*	*0.04*	200
PRESSD62	62,0	21,0	16,0	1,2	*2.45*	*0.83*	*5/8*	*0.05*	200
PRESSD75	75,0	26,0	19,5	1,3	*2.96*	*1.03*	*3/4*	*0.06*	100
PRESSD95	95,0	33,0	24,0	1,4	*3.75*	*1.30*	*15/16*	*0.06*	40

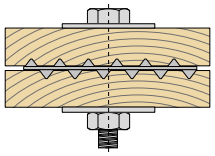

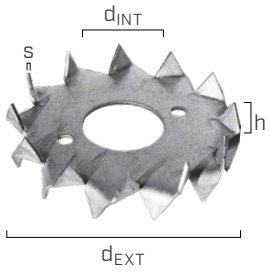

TYPE C2 DOWEL - MONOLATERAL

EN 912

CODE	d_{EXT} [mm]	d_{INT} [mm]	h [mm]	s [mm]	*d_{EXT} [in]*	*d_{INT} [in]*	*h [in]*	*s [in]*	pcs
PRESSE48	50,0	12,4	6,6	1,0	*1.97*	*0.49*	*1/4*	*0.04*	300
PRESSE62	62,0	12,4	8,7	1,2	*2.5*	*0.49*	*11/32*	*0.05*	200
PRESSE75	75,0	16,4	10,4	1,3	*3.0*	*0.65*	*7/16*	*0.06*	100
PRESSE95	95,0	16,4	12,7	1,4	*3.8*	*0.65*	*1/2*	*0.06*	50

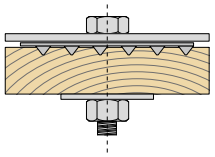

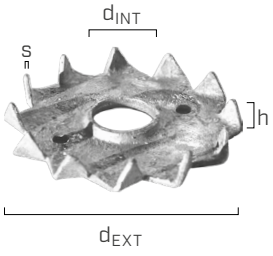

GEKA

CE

TYPE C11 DOWEL - MONOLATERAL

EN 912

CODE	rod	d_{EXT} [mm]	d_{INT} [mm]	h [mm]	*d_{EXT} [in]*	*d_{INT} [in]*	*h [in]*	pcs
GEKAE50	M12	50	12,5	15	*1.97*	*0.49*	*0.60*	50
GEKAE65	M16	65	16,5	15	*2.56*	*0.65*	*0.60*	50
GEKAE80	M20	80	20,5	15	*3.15*	*0.81*	*0.60*	25

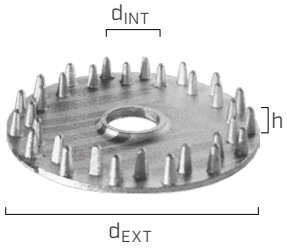

DBB CUT

MILLING MACHINE FOR APPEL AND GEKA ANCHORS

- Precise and reliable milling tool for accurately milling anchor connections in order to achieve optimal connection load capacity
- The anchor cutter is equipped with an adjustable cutting disc



	CODE	description	pcs
1	**DBB763000**	dowel cutter 65 - 128 mm with guiding pin Ø13.5 mm	1
2	**DBB763009**	ring-shaped wedge knife set HS	3
3	**DBB763101**	guiding pin Ø 13,5 mm	1
	DBB763103	guiding pin Ø 17,5 mm	1
	DBB763105	guiding pin Ø 21,5 mm	1
	DBB763107	guiding pin Ø 25,5 mm	1

The knife set is not included in the supply and must be ordered separately.
For safety reasons, we recommend drilling with a drill stand.

	CODE	description	pcs
4	**DBB762750**	forstner bit for GEKO Ø50 mm incl. guide pin Ø13.5 mm	1
	DBB762751	forstner bit for GEKO Ø65 mm incl. guide pin Ø13.5 mm	1
	DBB762752	forstner bit for GEKO Ø80 mm incl. guide pin Ø13.5 mm	1
	DBB762753	forstner bit for GEKO Ø95 mm incl. guide pin Ø13.5 mm	1
	DBB762755	forstner bit for APPEL Ø65 mm incl. guide pin Ø13.5 mm	1
	DBB762756	forstner bit for APPEL Ø80 mm incl. guide pin Ø13.5 mm	1
	DBB762757	forstner bit for APPEL Ø95 mm incl. guide pin Ø13.5 mm	1

APPEL | TYPE A1 DOWEL - BILATERAL | EN 912

application	$Ø_{ext}$ [mm]	milling machine for dowels	+	ring-shaped wedge knife set	+	forstner bit
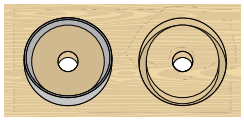	65 - 128 (continuous adjustment)	DBB763000 		DBB763009 		-

APPEL | TYPE B1 DOWEL - MONOLATERAL | EN 912

application	$Ø_{ext}$ [mm]	milling machine for dowels	+	ring-shaped wedge knife set	+	forstner bit
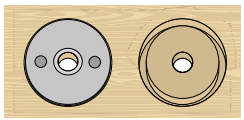	65	DBB763000 		DBB763009 		DBB762755
	80					DBB762756 
	95					DBB762757

GEKA | TYPE C10 DOWEL - MONOLATERAL AND BILATERAL | EN 912

application	$Ø_{ext}$ [mm]	milling machine for dowels	+	ring-shaped wedge knife set	+	forstner bit
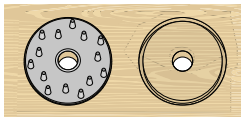	50	-		-		DBB762750
	65					DBB762751 
	80					DBB762752
	95					DBB762753

GUIDING PIN FOR DOWEL CUTTER RECOMMENDATION ACCORDING TO DIN 1052

CODE	guiding pin Ø [mm]	APPEL Ø [mm]	GEKA Ø [mm]	threaded rod	pre-drilling hole Ø [mm]
DBB763101 (included)	13,5	65 - 128	50	M12	14
DBB763103	17,5	-	65	M16	18
DBB763105	21,5	-	80	M20	22
DBB763107	25,5	-	95; 115	M24	26

ZVB

HOOKS FOR BRACINGS

- Hooks, disks and tensioners for the construction of bracing systems
- Bracing rods are not supplied

HOOK FOR BRACINGS

Spheroidal gusset GJS-400-18-LT

Hot dip galvanising 85 µm

CODE	rod	thread(1)	S_{plate}		pcs
			[mm]	*[in]*	
ZVBDX10	M10	R	8	*0.32*	1
ZVBSX10	M10	L	8	*0.32*	1
ZVBDX12	M12	R	10	*0.40*	1
ZVBSX12	M12	L	10	*0.40*	1
ZVBDX16	M16	R	15	*0.60*	1
ZVBSX16	M16	L	15	*0.60*	1
ZVBDX20	M20	R	18	*0.71*	1
ZVBSX20	M20	L	18	*0.71*	1
ZVBDX24	M24	R	20	*0.79*	1
ZVBSX24	M24	L	20	*0.79*	1
ZVBDX30	M30	R	25	*0.99*	1
ZVBSX30	M30	L	25	*0.99*	1



(1)R = right-hand thread | L = left-hand thread
Hook for M27 rod available upon request.
Cover for thread available upon request.

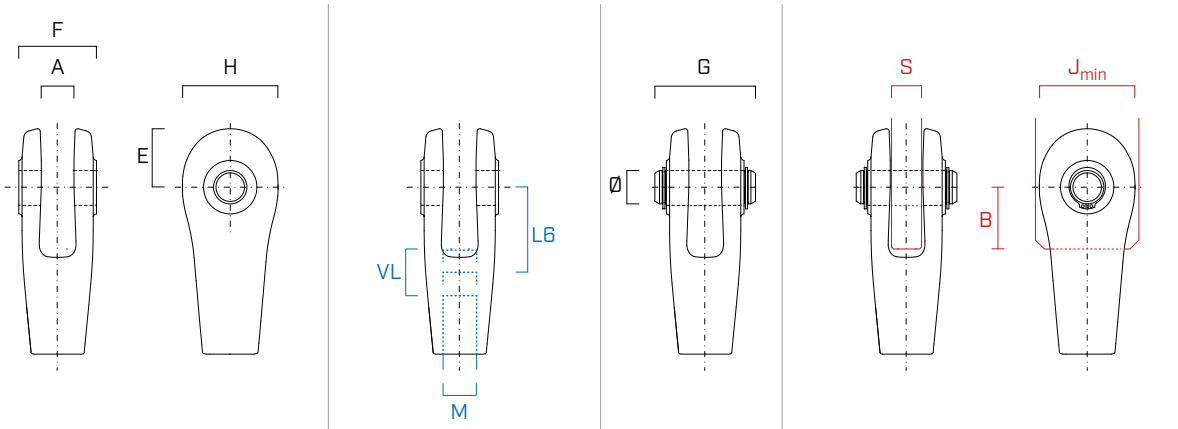

	HOOK				ROD			PIN		PLATE			
	A	E	F	H	M	VL	L6	Ø	G	S	B	J_{min}	hole
	[mm]	[mm]	[mm]	[mm]	[mm]	[mm]	[mm]	[mm]	[mm]	[mm]	[mm]	[mm]	[mm]
M10	9,2	17,5	23,0	29,0	M10	16	28	10	32,3	8	20	35	11
M12	11,2	21,0	27,2	35,4	M12	18	32	12	38,4	10	23	41	13
M16	16,4	27,5	38,5	45,6	M16	22	42	16	48,4	15	31	52	17
M20	19,6	35,0	46,5	56,0	M20	28	51	20	59,9	18	37	62	21
M24	21,8	42,0	54,5	69,0	M24	36	63	24	67,8	20	45	75	25
M30	27,0	52,5	67,6	86,0	M30	44	78	30	82,1	25	56	93	31

DISK FOR BRACINGS

S355 carbon steel

Hot dip galvanising 85 µm

CODE	hook	no. holes(1)	pcs
		[pcs]	
ZVBDISC10	M10	2	1
ZVBDISC12	M12	2	1
ZVBDISC16	M16	2	1
ZVBDISC20	M20	2	1
ZVBDISC24	M24	2	1
ZVBDISC30	M30	2	1

(1)Depending on the number of hooks converging on the disk, additional holes must be provided with diameter suitable to accommodate the joining pin.

Disk for M27 hook available upon request.



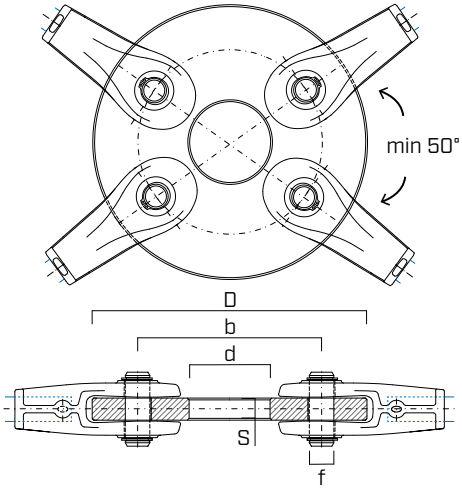

	D	d	b	S	f
	[mm]	[mm]	[mm]	[mm]	[mm]
M10	118	36	78	8	11
M12	140	42	94	10	13
M16	184	54	122	15	17
M20	224	66	150	18	21
M24	264	78	178	20	25
M30	334	98	222	25	31

f = hole diameter to join disk and hook.

STRUCTURAL VALUES - TENSILE STRENGTH

$N_{R,d}$ FOR DIFFERENT ROD - HOOK - DISK - JOINING PLATE COMBINATIONS

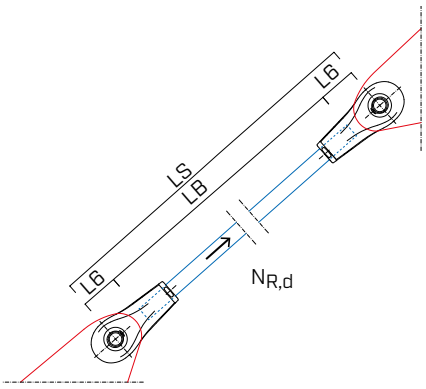

Rod

Hook

Plate

LS = system length

LB = rod length = LS – 2 · L6

hook for Rothoblaas bracings	disk for Rothoblaas bracings	steel rod $f_{y,k}$ [N/mm^2]	joining plate steel(1)	$N_{R,d}$ [kN]					
				M10	M12	M16	M20	M24	M30
GJS-400-18-LT	S355	540	S355	31,0	43,7	81,4	127	183	291
		540	S235	25,6	38,5	76,9	110	148	230
		355	S235	19,6	28,5	53,1	82,9	120	190
		235	S235	15,0	21,9	40,7	63,5	91,5	145

(1)The plate connecting the bracing system to the main structure needs to be dimensioned case by case, hence it cannot be provided by Rothoblaas.

GENERAL PRINCIPLES

- Design values are consistent with EN 1993.
- The rod shall be dimensioned case by case.
- Dimensioning and verification of the connection between the bracing system and the main structure has to be carried out separately.

TENSIONER WITH INSPECTION HOLE

S355 bright zinc plated carbon steel
DIN 1478

CODE	rod	length		pcs
		[mm]	*[in]*	
ZVBTEN12	M12	125	*4 15/16*	1
ZVBTEN16	M16	170	*6 3/4*	1
ZVBTEN20	M20	200	*8*	1
ZVBTEN24	M24	255	*10 1/16*	1
ZVBTEN27(*)	M27	255	*10 1/16*	1
ZVBTEN30	M30	255	*10 1/16*	1

(*) Value not included in DIN 1478.

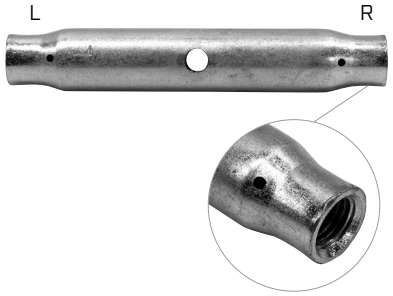

R = right-hand thread
L = left-hand thread

GEOMETRY OF THE TENSIONER ACCORDING TO DIN 1478

	C	A	B	E	F
	[mm]	[mm]	[mm]	[mm]	[mm]
M12	25	125	15	4,0	10
M16	30	170	20	4,5	10
M20	33,7	200	24	5,0	12
M24	42,4	255	29	5,6	12
M27(*)	42,4	255	40	5,6	12
M30	51	255	36	6,3	16

(*) Size not included in DIN 1478.

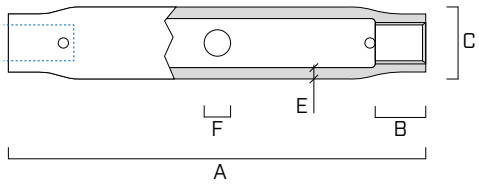

STRUCTURAL VALUES | TENSILE STRENGTH

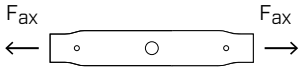

		M12	M16	M20	M24	M27	M30
$N_{ax,k}$	[kN]	65,3	96,0	117,4	182,1	182,1	242,5

GENERAL PRINCIPLES

- The characteristic values $R_{ax,k}$ are according to EN 1993.
- Design values can be obtained from characteristic values as follows:

$$R_{ax,d} = \frac{R_{ax,k}}{\gamma_{M0}}$$

The coefficient γ_{M0} should be taken according to the current regulations used for the calculation.



The minimum necessary to work at maximum efficiency

"Tools for timber construction" is the catalogue of carpenters' favourite tools. Tools, screwdrivers, machines and nailguns, transport and lifting systems, drill bits and cutters, fall protection systems, timber repair solutions and specific accessories for every need.



Try them, you will never leave them behind again!
Browse the online catalogue:

rothoblaas.com

rothoblaas

Solutions for Building Technology

ANGLE BRACKETS AND PLATES

ANGLE BRACKETS AND PLATES

SHEAR AND TENSILE ANGLE BRACKETS

NINO
UNIVERSAL ANGLE BRACKET FOR SHEAR AND TENSILE LOADS 196

TITAN N
ANGLE BRACKET FOR SHEAR AND TENSILE FORCES 216

TITAN S
ANGLE BRACKET FOR SHEAR AND TENSILE FORCES 232

TITAN F
ANGLE BRACKET FOR SHEAR LOADS 242

TITAN V
ANGLE BRACKET FOR SHEAR AND TENSILE FORCES 250

TENSION ANGLE-BRACKETS

WKR
TENSILE ANGLE BRACKET FOR BUILDINGS 258

WKR DOUBLE
TENSILE ANGLE BRACKET FOR PREFABRICATED WALLS 270

WHT
ANGLE BRACKET FOR TENSILE LOADS 278

WZU
ANGLE BRACKET FOR TENSILE LOADS 286

ANGLE BRACKETS FOR FACADES

WKF
ANGLE BRACKET FOR FACADES 292

STANDARD ANGLE BRACKETS

WBR | WBO | WVS | WHO
STANDARD ANGLE BRACKETS 294

LOG
ANGLE BRACKET FOR LOG HOUSE 298

SPU
UNI ANCHOR PLATE FOR JOISTS 299

SHEAR PLATES

TITAN PLATE C
PLATE FOR SHEAR LOADS 300

TITAN PLATE T
PLATE FOR SHEAR LOADS 308

PLATES FOR TENSILE STRESS

WHT PLATE C
PLATE FOR TENSILE LOADS 316

WHT PLATE T
PLATE FOR TENSILE LOADS 324

VGU PLATE T
PLATE FOR TENSILE LOADS 328

LBV
PERFORATED PLATE 332

LBB
PERFORATED STRAP 336

LOAD-BEARING WALL CONSTRUCTION SYSTEM

HORIZONTAL LOADS

During the design phase of a building its reaction to horizontal and vertical actions such as, **wind** and/or **earthquakes** must be considered.

Horizontal actions can be schematised as loads acting on the floor levels. To guarantee the adequate seismic performance of timber buildings and avoid all the possible failure modes, it is fundamental to design all the connection systems correctly.

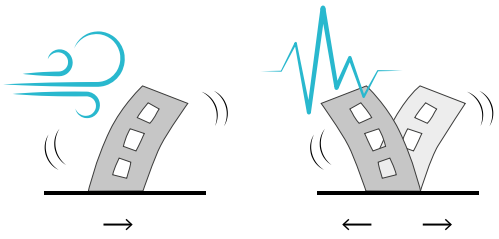

LOAD PATTERN

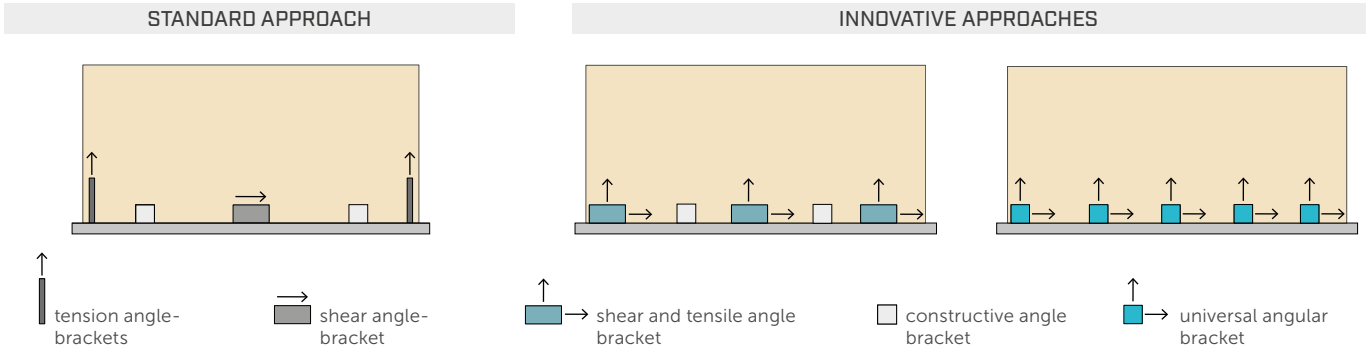

Horizontal loads acting at the floor level introduce shear and tension forces on the structural elements of the building; these forces must be absorbed by an effective connection system. A complete range of joints for walls and buildings also allows for innovative design approaches.

THE RIGHT SOLUTION FOR EVERY JOINT

The same structural problem can be solved using different alternative connection systems.

	TWO-DIMENSIONAL PLATES	THREE-DIMENSIONAL ANGLE BRACKETS	CONCEALED JOINTS	DISTRIBUTED JOINTS
INTERMEDIATE FLOOR JOINT	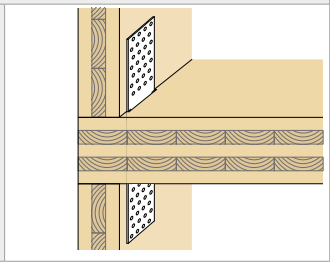	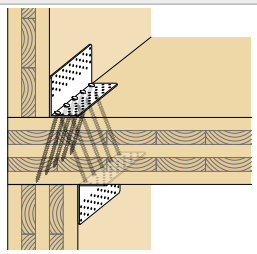	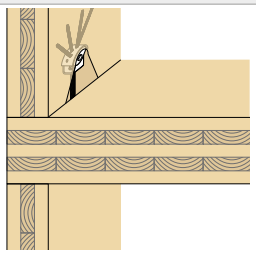	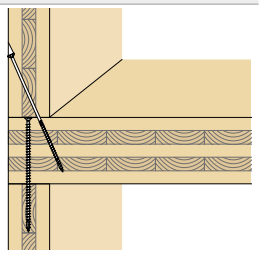
	WHT/TITAN PLATE T TIMBER	NINO/TITAN/WKR/WHT	RADIAL	VGZ/HBS
BASE JOINT	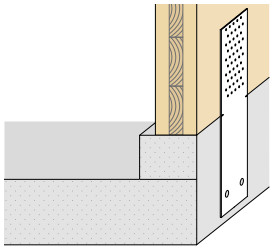	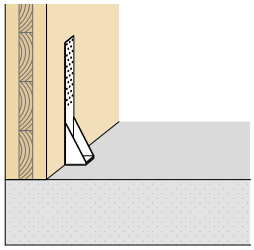	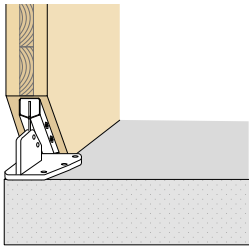	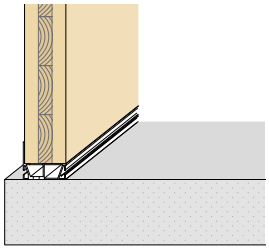
	WHT/TITAN PLATE C CONCRETE	NINO/TITAN/WKR/WHT	X-RAD	ALU START

CONNECTIONS

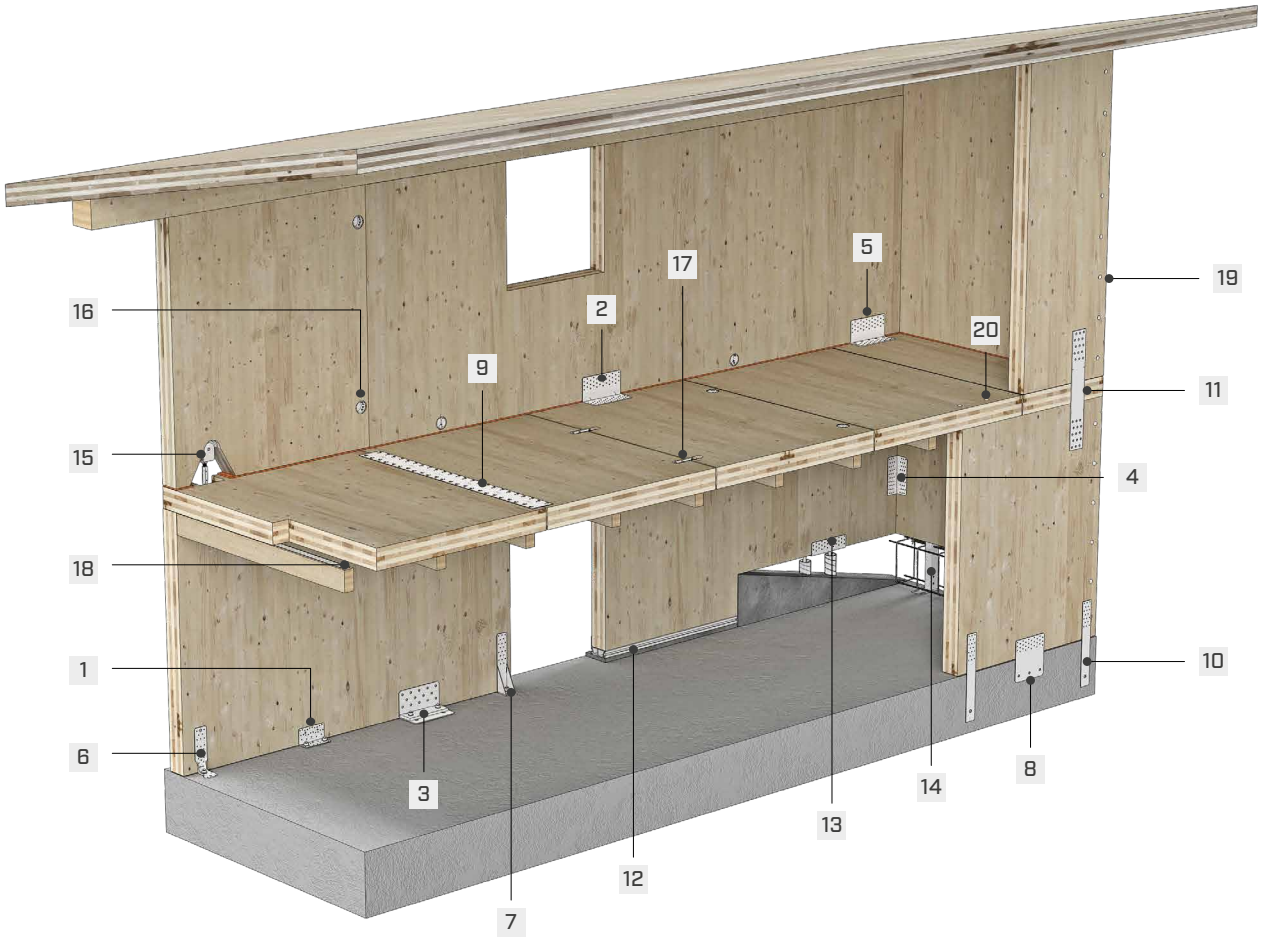

ANGLE BRACKETS

They are used for both timber-to-timber and timber-to-concrete connections. Depending on the specific model, they can be used to transfer tensile and shear forces, or a combination of both forces. The addition of special washers improves their performance and versatility.

1 NINO
2 TITAN N
3 TITAN S + WASHER
4 TITAN F
5 TITAN V
6 WKR
7 WHT

TWO-DIMENSIONAL PLATES

They allow the transfer of both tensile and shear forces; depending on the type used, they are suitable for both timber-to-timber and timber-to-concrete connections. Using fasteners with different diameters means that a wide range of strengths can be covered.

8 TITAN PLATE C
9 TITAN PLATE T
10 WHT PLATE C
11 WHT PLATE T

SPECIAL CONNECTORS

A new range of simple solutions are available to solve complex problems from small residential buildings to multi-storey buildings. These solutions offer the opportunity for designers and builders to break the mould and find innovative solutions.

12 ALU START
13 TITAN DIVE
14 UP LIFT
15 RADIAL
16 RING
17 SLOT
18 SHARP METAL

SELF-DRILLING SCREWS

The self-drilling product range of screws that provide an optimal solution to satisfy the design requirements regardless of the type of external action.

19 HBS/TBS
20 VGZ

SEISMIC-REV

Reduction of Earthquake Vulnerability

The **Seismic-REV project (Reduction of Earthquake Vulnerability)** had the clear aim of reducing the seismic vulnerability of the timber constructions, by studying the behaviour of the traditional metallic connections with which they are assembled and, in consideration of this, by proposing an innovative type of connection called X-RAD for assembling buildings for residential use made of CLT (Cross Laminated Timber board panels). This research project involved different institutions. Together with Rothoblaas, collaborated the CNR-IBE Institute of San Michele all'Adige and the University of Trento, where the experimental and research work has been carried out.

The scientific report on experimental testing is available at Rothoblaas.

CONNECTORS (screws, nails, etc.)

The results of texts concerning cylindrical-shank connectors (such as screws and nails) under both tensile and shear loads, for timber-to-panel, steel-to-timber and timber-to-timber joints are reported.



1

Sheathing-to-framing specimen with ring nails tested in shear load



2

Steel-to-timber specimen with LBS screws tested in shear

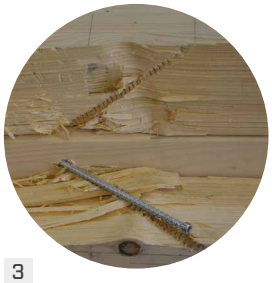

3

Timber-to-timber specimen with VGZ inclined screws tested in tension and compression



4

Timber-to-timber specimen with HBS screws tested in shear

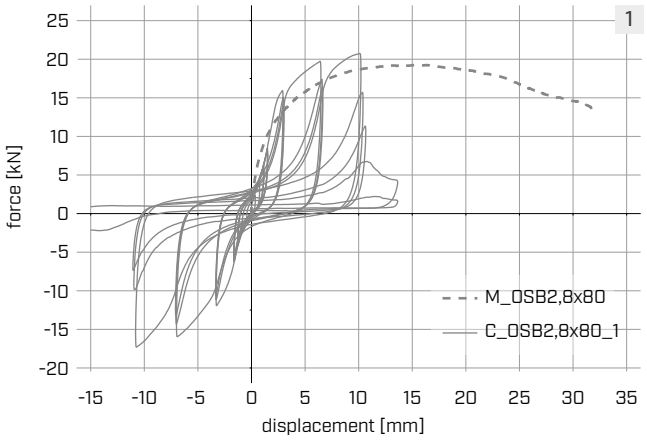

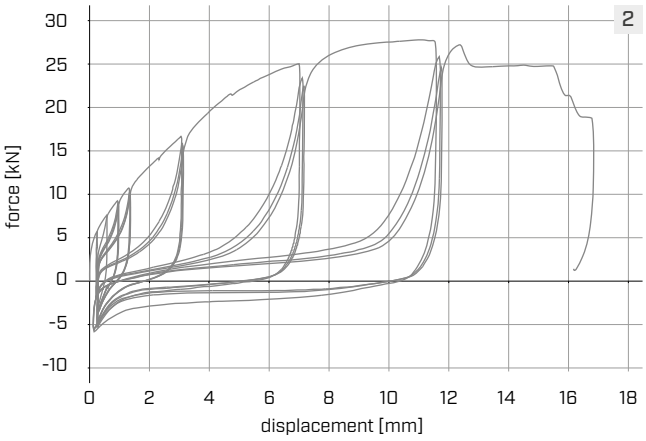

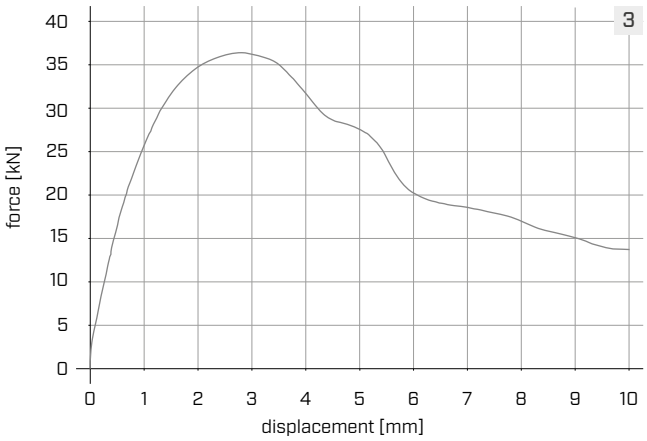

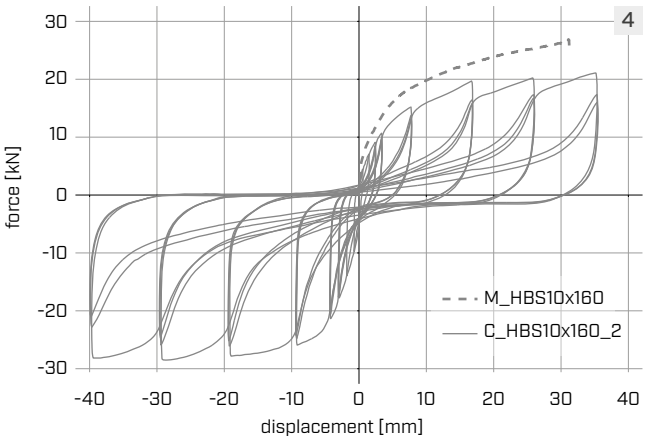

CONNECTIONS (angle brackets and metal plates + fastening)

The results of texts concerning complete steel connections (loaded in shear and tension) for timber-to-timber and timber-to-concrete joints are reported.



1

TITAN timber-to-timber



2

TITAN timber-to-timber with acoustic profiles



3

WHT timber-to-concrete

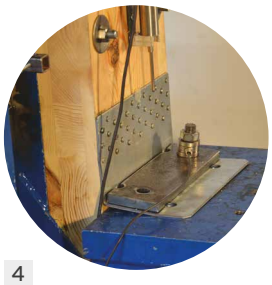

4

TITAN WASHER timber-to-concrete (tension)

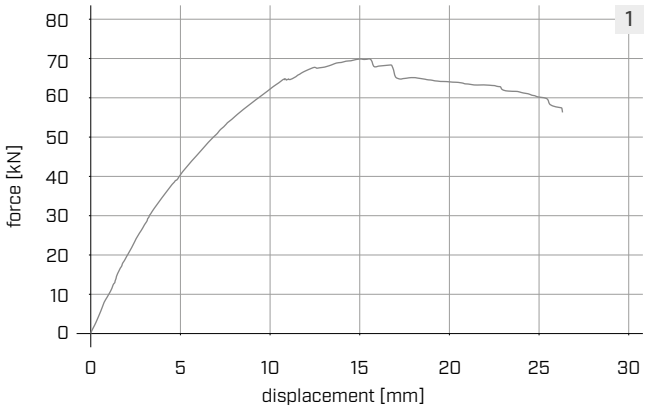

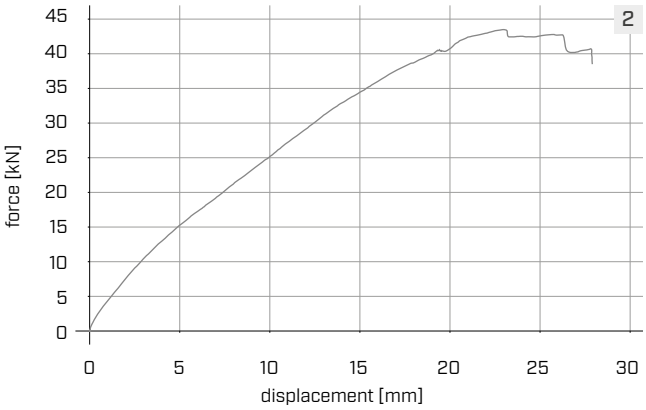

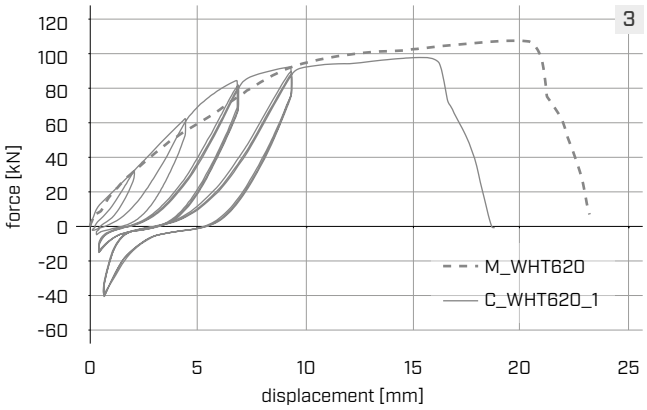

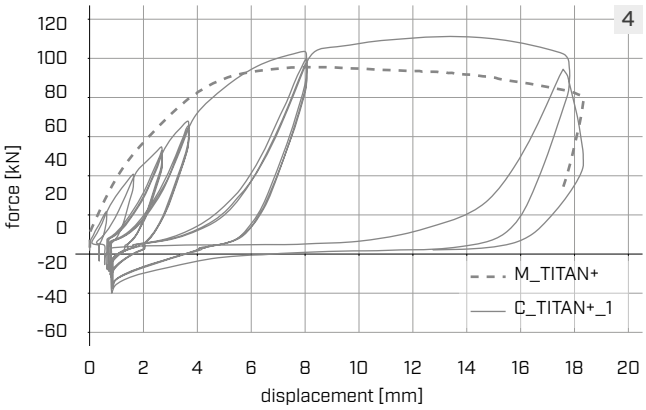

WALL SYSTEM

The results of texts concerning frame walls and CLT (Cross Laminated Timber) walls assembled by using the connection types previously tested are reported.



Frame wall during testing



1

CLT (Cross Laminated Timber) wall during testing

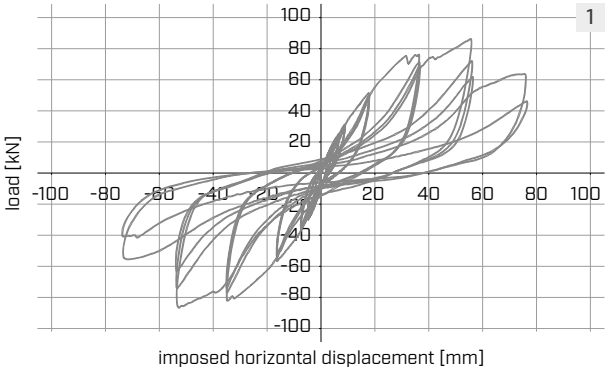

STRUCTURAL DESIGN AND ACOUSTICS

RESEARCH & DEVELOPMENT

When soundproofing power and impact sound measurements are made on site, the value is lower than the value measured in the laboratory for the same construction assembly. This is because sound transmission between neighbouring rooms is also characterized by flanking sound transmission, meaning contributions to propagation through the structure.



In order to minimise noise propagation through structural components, resilient profiles such as XYLOFON, ALADIN and PIANO are used, which avoid direct contact between the elements and dissipate the energy produced by sound. These can also be inserted within the structural connection to mitigate the acoustic bridge. However, the influence of the resilient profile on the stiffness and strength of the connection is far from negligible.
It is important to have thin, low compressible resilient profiles and certified connectors with high strengths even with the resilient profile in between.

The resilient profiles developed by Rothoblaas to reduce flanking sound transmission have been optimised to ensure excellent acoustic performance, as declared in the European Technical Assessment (ETA-23/0061 and ETA-23/0193).

ACOUSTIC CHARACTERISATION OF CONNECTIONS

Rothoblaas' research has made correct acoustic design possible in the presence of structural connections.

The floor (1) is made of 100 mm 5-layer CLT and is decoupled with **XYLOFON** from the walls (2) made of 100 mm 5-layer CLT panels. The floor was fastened with 6 partially threaded **HBS** screws Ø8 x 240 mm, pitch 440 mm and 2 **NINO** (3) angle brackets with **XYLOFON PLATE** resilient profile with 5 x 50 screws (31 screws per angle bracket).

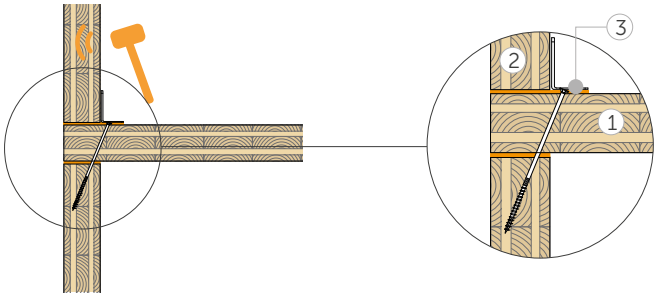

$\Delta_{l,14}$ = **6,6 dB**
$\Delta_{l,12}$ = **7,3 dB**
$\Delta_{l,24}$ = **10,6 dB**

reduction of vibration transmission

The floor (1) is made of 160 mm 5-layer CLT and is decoupled with **XYLOFON** from the walls (2) made of 100 mm 5-layer CLT panels. The floor was fixed with HBS 6 x 240 mm screws at a distance of 300 mm and 10 **TITAN + XYLOFON PLATE** (3) TTN240 angle brackets with **LBS** 5 x 70 screws (72 screws each angle bracket).

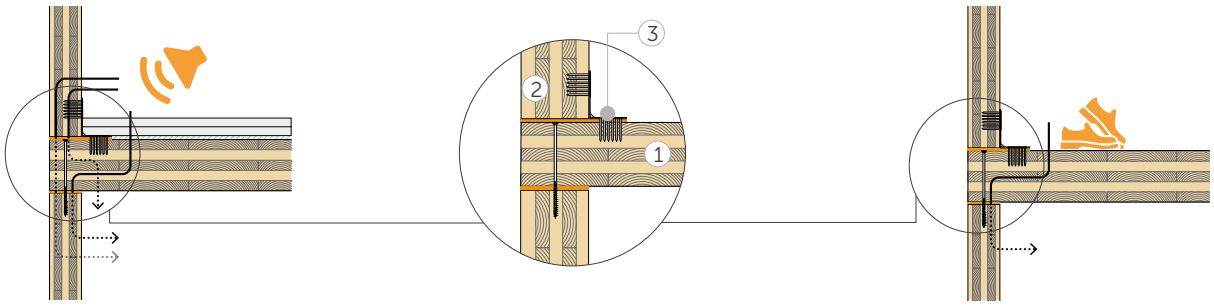

$\Delta R_{Df+Ff,situ}$ = **10 dB**
$\Delta STC_{Df+Ff,situ}$ = ***10 dB***

reduction of flanking airborne sound transmission

$\Delta L_{n,Df+Ff,situ}$ = **8 dB**
$\Delta IIC_{Df+Ff,situ}$ = ***8 dB***

reduction of flanking impact sound transmission

STRUCTURAL CHARACTERISATION OF CONNECTIONS

Rothoblaas' research has made it possible to achieve correct static design in the presence of structural connections with an interposed resilient profile.

EXPERIMENTAL STAGE

Tests according to EN 26891 were carried out in the laboratories of the CNR/IBE in San Michele All'Adige and the University of Bologna. The test specimens, assembled with TITAN and NINO angle brackets with resilient XYLOFON 35 profile (6 mm thick), were brought to failure to investigate the maximum load, the load at 15 mm and the relative displacements. The experimental campaigns allowed to obtain the force-displacement curves with and without an interposed resilient profile.

SET-UP without XYLOFON

TTF200

SET-UP with XYLOFON

TTF200 + XYLOFON

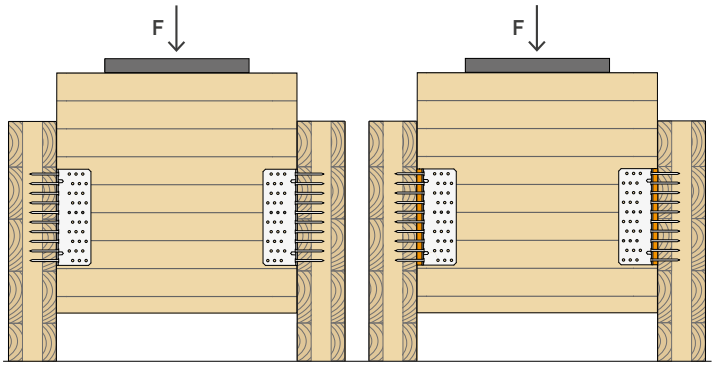

load-displacement curve

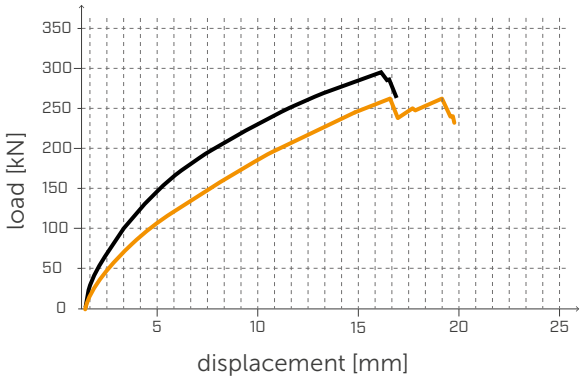

Tests show that the resilient profile results in both a decrease in stiffness and strength. This effect must be properly considered by the structural designer.

RESULTS CERTIFIED BY ETA

ETA-11/0496 (TITAN), ETA-22/0089 (NINO) and ETA-23/0813 (WHT) certifications declare the strength values of the angle brackets with or without interposed resilient profile. The certified strength values are exceptional even in the presence of a resilient profile, with the influence on strength limited to a few percentage points. This is made possible by the reduced thickness of the XYLOFON resilient profile (6 mm) and the inherent characteristics of the special polyurethane compound.

The table shows the ETA-certified strengths for the most significant fastening configurations (pattern 1 for NINO angle brackets and full pattern for TITAN and WHT).

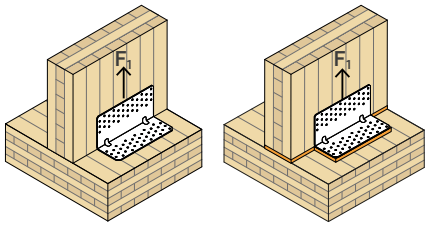

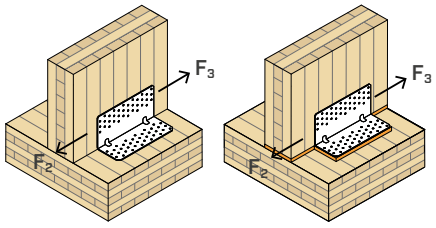

	$R_{1,k}$			$R_{2/3,k}$		
CODE	no XYLOFON	XYLOFON	difference %	no XYLOFON	XYLOFON	difference %
NINO100100	20,0	20,0	**0%**	38,1	34,6	**-9%**
NINO15080	39,5	37,2	**-6%**	38,1	34,6	**-9%**
NINO100200	41,2	41,2	**0%**	26,7	18,7	**-30%**
TTN240	16,2	16,2	**0%**	58,0	43,8	**-24%**
TTF200	-	-	-	55,1	45,1	**-18%**
TTV240	101,0	101,0	**0%**	73,1	62,9	**-14%**
WHT15	40,1	40,1	**0%**	-	-	-
WHT20	54,4	54,4	**0%**	-	-	-
WHT30	82,7	82,7	**0%**	-	-	-
WHT40	106,4	106,4	**0%**	-	-	-
WHT55	141,8	141,8	**0%**	-	-	-

ANGLE BRACKET RANGE

ALL SOLUTIONS IN ONE RANGE

TIMBER-TO-TIMBER JOINT

PRODUCT		CODE	type	pattern	XYLOFON with	XYLOFON without	n(1) [pcs]	$R_{1,k}$ [kN]	$R_{2/3,k}$(2) [kN]	$R_{4,k}$ [kN]	$R_{5,k}$ [kN]
NINO	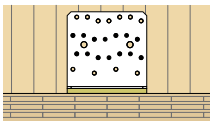	NINO100100	CLT	pattern 1	●	●	27+2	20,0	38,1	23,2	1,8
				pattern 2	●	●	27	6,8	17,2	23,2	1,8
			TIMBER FRAME	pattern 3	●	●	21	-	9,8	7,4	1,8
				pattern 4	●	●	21	-	11,3	23,2	3,4
				pattern 5	●	●	17	-	9,8	9,2	3,4
	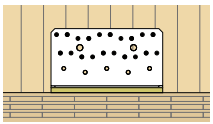	NINO15080	CLT	pattern 1	●	●	31+3	37,5	38,1	22,3	2,5
				pattern 2	●	●	31	6,0	15,5	22,3	2,5
			TIMBER FRAME	pattern 3	●	●	21	-	13,3	10,2	2,5
				pattern 4	●	●	21	-	15,5	18,7	4,8
				pattern 5	●	●	16	-	12,7	14,7	4,8
	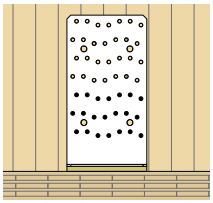	NINO100200	CLT	pattern 1	-	●	34+3	41,2	26,7	19,1	2,6
					●	-	34+3	41,2	18,7	19,1	2,6
TITAN N	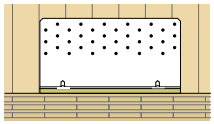	TTN240	CLT	full pattern	-	●	72	16,2	58,0	23,8	3,4
					●	-	72	-	43,8	-	-
TITAN S	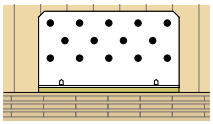	TTS240	CLT	full pattern	-	●	28	-	60,0	20,7	4,2
					●	-	28	-	35,7	-	-
TITAN F	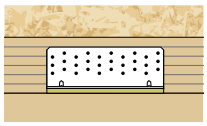	TTF200	TIMBER FRAME	full pattern	-	●	60	-	55,1	29,7	19,3
					●	-	60	-	45,1	-	-
				pattern 3	-	●	30	-	36,3	-	-
					●	-	30	-	28,3	-	-
				pattern 2	-	-	20	-	20,8	-	-
TITAN V	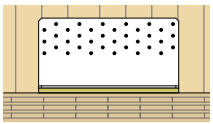	TTV240	CLT	pattern 1	-	●	66+5	101,0	73,1	-	-
					●	-	66+5	99,0	62,9	-	-
				pattern 2	-	●	66+2	51,8	59,7	-	-
					●	-	66+2	50,8	49,4	-	-
				pattern 3	-	●	48+5	64,5	65,8	-	-
				pattern 4	-	●	48+2	51,3	51,5	-	-

(1) n represents the sum of the fastenings in the horizontal and vertical flange.

(2) The $R_{2/3,k}$ values for NINO100100 and NINO15080 shown in the table are valid for installation without acoustic profile. The strength values with XYLOFON PLATE are available on page 208 of the catalogue.

EXTERNAL LOADS

Certified tensile (R_1), shear ($R_{2/3}$) and tilting ($R_{4/5}$) strengths. Various total and partial fastening configurations. Certified values also with interposed acoustic profiles (**XYLOFON**).

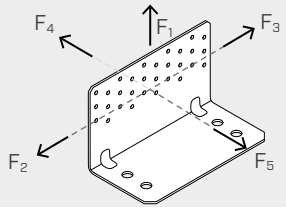

TIMBER-TO-CONCRETE JOINT

PRODUCT		CODE	TYPE	pattern	WASHER	n_v [pcs]	$R_{1,k}$ [kN]	$R_{2/3,k}$ [kN]	$R_{4,k}$ [kN]	$R_{5,k}$ [kN]
NINO	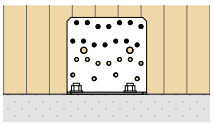	NINO100100	CLT	pattern 6	-	14	14,0	18,1	6,2	1,1
				pattern 7	-	14	14,0	18,1	23,2	1,8
			TIMBER FRAME	pattern 8	-	8	-	5,8	3,8	1,1
				pattern 10	-	8	-	11,2	14,4	3,4
				pattern 11	-	4	-	9,3	6,3	1,8
				pattern 12	-	4	-	9,3	9,2	3,4
	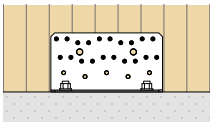	NINO15080	CLT	pattern 6	-	10	14,7	21,1	8,7	1,6
					●	10	24,9	26,7	-	-
				pattern 7	-	20	14,7	21,3	22,3	2,5
					●	20	24,9	21,3	-	-
			TIMBER FRAME	pattern 8	-	10	-	11,0	10,2	2,5
					●	10	-	11,0	-	-
				pattern 9	-	10	-	15,7	18,7	4,8
					●	10	-	15,7	-	-
				pattern 10	-	5	-	9,3	8,4	2,5
					●	5	-	9,3	-	-
				pattern 11	-	5	-	10,0	11,6	4,8
					●	5	-	10,0	-	-
	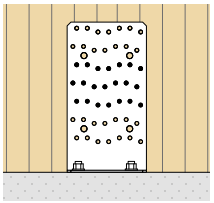	NINO100200	CLT	pattern 2	●	14	34,7	11,6	-	-
				pattern 3	-	21	14,7	10,7	2,6	0,8
				pattern 5	-	21	14,7	16,9	4,9	1,2
TITAN N	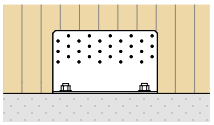	TCN200	CLT	full pattern	-	30	-	42,1	20,9	2,7
					●	30	45,7	66,4	-	-
				pattern 4	-	25	-	37,9	-	-
				pattern 3	-	20	-	18,8	-	-
				pattern 2	-	15	-	13,2	20,7	1,6
				pattern 1	-	10	-	8,8	-	-
	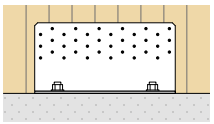	TCN240	CLT	full pattern	-	36	-	55,2	24,1	3,3
					●	36	69,8	82,6	-	-
				pattern 4	-	30	-	51,3	-	-
				pattern 3	-	24	-	25,9	-	-
				pattern 2	-	18	-	18,4	23,9	1,9
				pattern 1	-	12	-	12,2	-	-
TITAN S	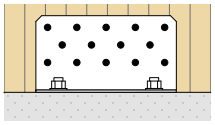	TCS240	CLT	full pattern	-	14	-	70,3	18,1	4,3
					●	14	75,9	85,9	-	-
				partial	-	9	-	36,1	-	-
					●	9	33,9	-	-	-
TITAN F	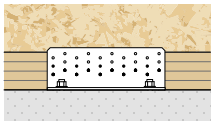	TCF200	TIMBER FRAME	full pattern	-	30	-	51,8	18,6	9,5
				pattern 3	-	15	-	28,7	-	-
				pattern 2	-	10	-	33,4	-	-
				pattern 1	-	10	-	27,5	-	-

The strength values shown in the table are to be considered as indicative values provided to guide the designer in the choice of the angle bracket. The final verification must be carried out in accordance with the technical specifications given on the individual product pages, depending on the design requirements and the actual boundary conditions.

As an example, the characteristic strength values (R_k), calculated according to EN 1995:2014 and EN 1993:2014, considering the minimum value between the timber-side and steel-side strength. Depending on the installation and product configuration, the values may be limited by the concrete-side strength.

NINO

PATENTED | DESIGN REGISTERED | ETA-22/0089

UNIVERSAL ANGLE BRACKET FOR SHEAR AND TENSILE LOADS

VERSATILE
Available in four models to meet multiple fastening requirements for CLT or timber frame walls. ETA-certified strengths with resilient XYLOFON PLATE profile.

A CONDENSATION OF INNOVATION
The timber-to-timber configuration can be installed with LBA nails or LBS screws or HBS PLATE screws. The addition of the optional VGS full thread connectors provides the angle bracket with unimaginable strengths.

SURPRISING STRENGTHS
Excellent strength values for forces in all directions, with the possibility of use in timber-to-timber or timber-to-concrete configurations. On concrete, the additional washer provides surprising strengths.

TIMBER FRAME
Optimised partial nailing allow installation even with the presence of bedding grout. It can also be used on smaller frame walls (38 mm | 2").

SERVICE CLASS SC1 SC2

MATERIAL

S250 Z275 **NINO**: carbon steel S250GD+Z275

S235 Fe/Zn12c **NINO WASHER:** S235 + Fe/Zn12c carbon steel

EXTERNAL LOADS

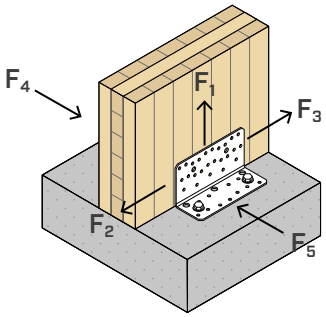

USA, Canada and more design values available online.





FIELDS OF USE

Shear and tension joints with small-medium stress.
Also optimised for fastening frame walls.
Timber-to-timber, timber-to-concrete and timber-to-steel configurations.

Can be applied to:
- solid timber and glulam
- timber frame
- CLT and LVL panels



A SINGLE AND CONCEALED ANGLE BRACKET

A single type of angle bracket for shear and tensile forces. It can be integrated into the floor or false ceiling panels.

RAISED WALL

Partial nailing patterns allow installation on CLT walls in the presence of a base plate or concrete kerb up to 120 mm high.

CODES AND DIMENSIONS

NINO

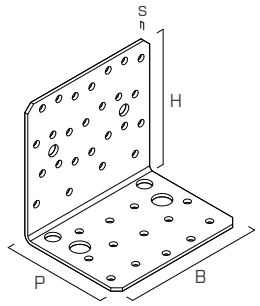

1

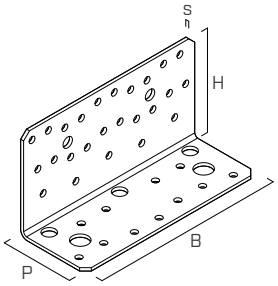

2

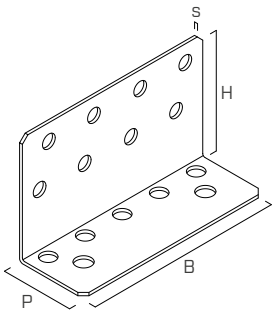

3

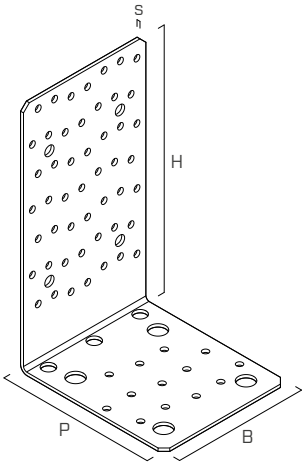

4

	CODE	B [mm]	P [mm]	H [mm]	s [mm]	*B [in]*	*P [in]*	*H [in]*	*s [in]*	n Ø5 *n Ø0.20* [pcs]	n_H Ø10 *n_H Ø0.40* [pcs]	n_H Ø13 *n_H Ø0.52* [pcs]	n Ø11 *n Ø0.44* [pcs]			pcs
1	**NINO100100**	104	78	100	2,5	*4 1/8*	*3 1/16*	*4*	*0.10*	25 + 13	2	2	-	●	●	10
2	**NINO15080**	146	55	77	2,5	*5 3/4*	*2 3/16*	*3 1/16*	*0.10*	25 + 11	3	2	-	●	●	10
3	**NINO15080S**	156	55	94	2,5	*6 1/8*	*2 3/16*	*3 11/16*	*0.10*	-	-	2	8+5	●	●	10
4	**NINO100200**	104	122	197	3	*4 1/8*	*4 13/16*	*7 3/4*	*0.12*	49 + 13	3	4	-	●	●	10

NINO WASHER

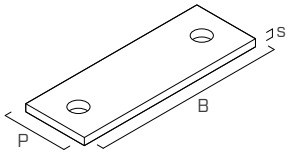

1

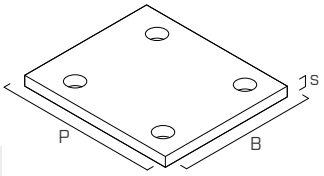

2

	CODE	NINO15080	NINO100200	B [mm]	P [mm]	s [mm]	*B [in]*	*P [in]*	*s [in]*	n_H Ø14 *n_H Ø0.56* [pcs]		pcs
1	**NINOW15080**	●	-	146	50	6	*5 3/4*	*1 15/16*	*0.24*	2	●	10
2	**NINOW100200**	-	●	104	120	8	*4 1/8*	*4 3/4*	*0.31*	4	●	10

ACOUSTIC PROFILE | TIMBER-TO-TIMBER JOINTS

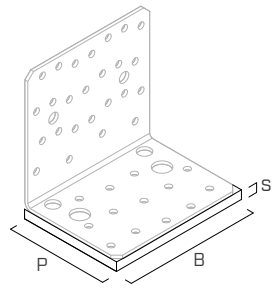

1

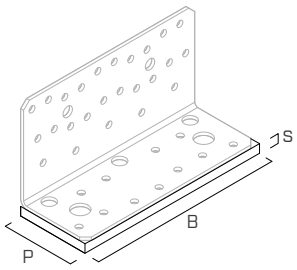

2

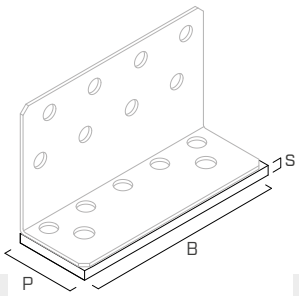

2

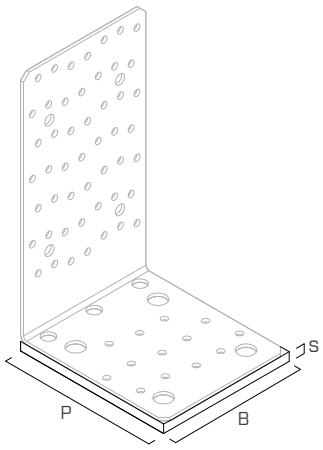

3

	CODE	NINO100100	NINO15080 NINO15080S	NINO100200	B [mm]	P [mm]	s [mm]	*B [in]*	*P [in]*	*s [in]*		pcs
1	**XYL3580105**	●	-	-	105	80	6	*4 1/8*	*3 1/8*	*0.24*	●	1
2	**XYL3555150**	-	●	-	150	55	6	*6*	*2 3/16*	*0.24*	●	1
3	**XYL35120105**	-	-	●	105	120	6	*4 1/8*	*4 3/4*	*0.24*	●	1

GEOMETRY

NIN0100100

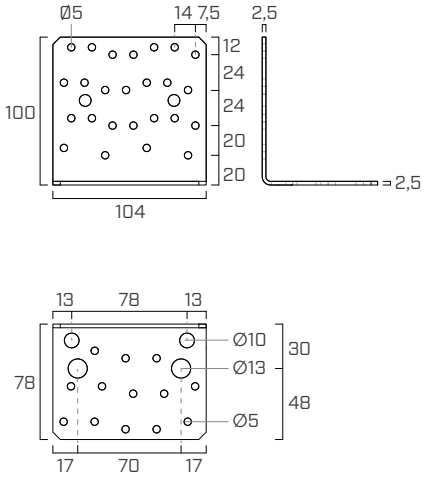

NIN015080

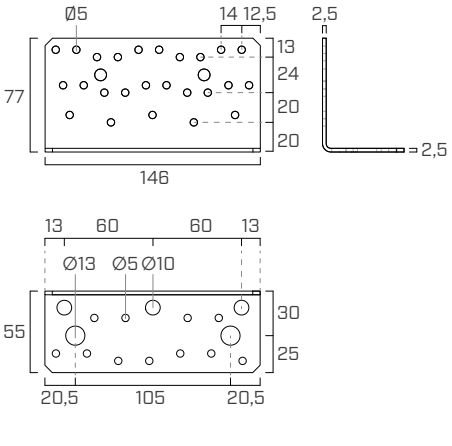

NIN015080S

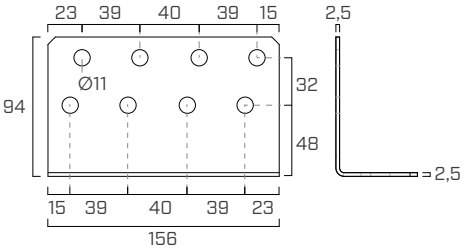

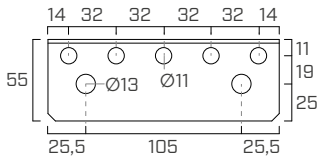

NIN0100200

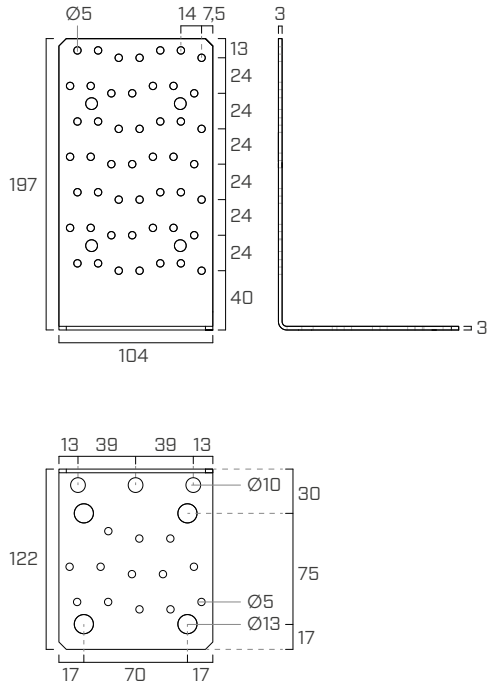

NINOW15080

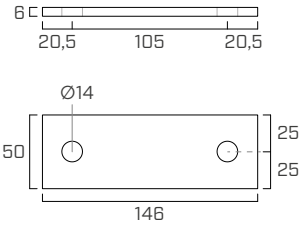

NINOW100200

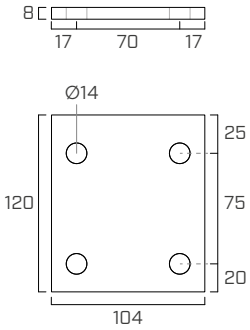

FASTENERS

type	description		d [mm]	support	page
LBA	high bond nail		4		570
LBS	round head screw		5		571
VGS	fully threaded countersunk screw		9		575
HBS PLATE	pan head screw		8		573
AB1	CE1 expansion anchor		12		536
SKR	screw-in anchor		12		528
VIN-FIX	vinyl ester chemical anchor		M12		545
HYB-FIX	hybrid chemical anchor		M12		552
EPO-FIX	epoxy chemical anchor		M12		557

FASTENING PATTERNS

NINO100100 | TIMBER-TO-TIMBER

INSTALLATION ON CLT

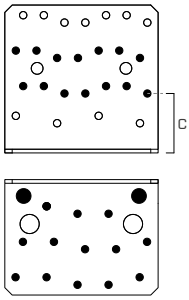

pattern 1 pattern 2

INSTALLATION ON TIMBER FRAME

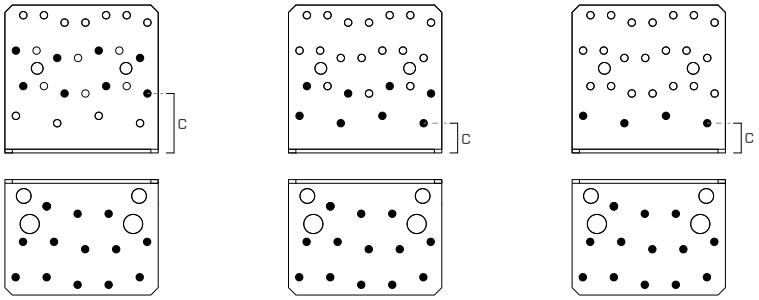

pattern 3 pattern 4 pattern 5

NINO100100 | TIMBER-TO-CONCRETE

INSTALLATION ON CLT

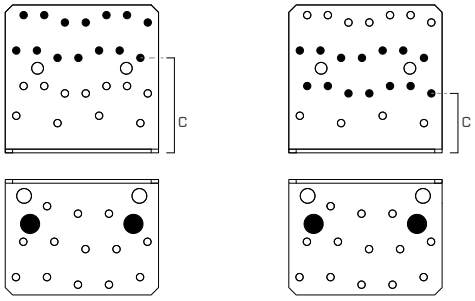

pattern 6 pattern 7

INSTALLATION ON TIMBER FRAME

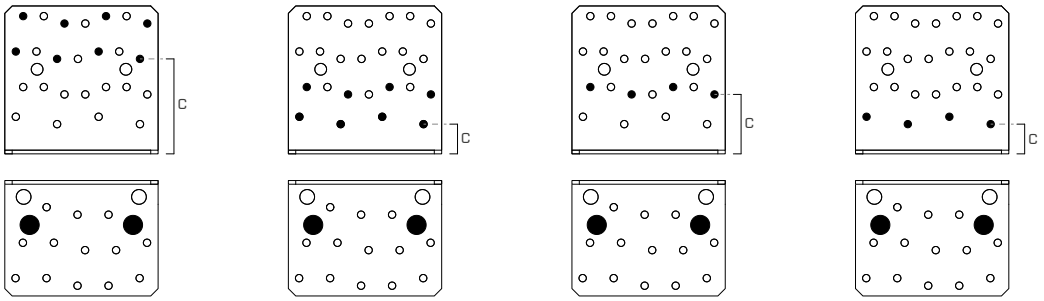

pattern 8 pattern 10 pattern 11 pattern 12

CODE	configuration	fastening holes Ø5		fastening holes Ø10	fastening holes Ø13		support	
		n_V [pcs]	n_H [pcs]	n_H [pcs]	n_H [pcs]	c [mm]		
NINO100100	pattern 1	14	13	2	-	40	●	-
	pattern 2	14	13	-	-	40	●	-
	pattern 3	8	13	-	-	40	●	-
	pattern 4	8	13	-	-	20	●	-
	pattern 5	4	13	-	-	20	●	-
	pattern 6	14	-	-	2	64	-	●
	pattern 7	14	-	-	2	40	-	●
	pattern 8	8	-	-	2	64	-	●
	pattern 10	8	-	-	2	20	-	●
	pattern 11	4	-	-	2	40	-	●
	pattern 12	4	-	-	2	20	-	●

FASTENING PATTERNS

NINO15080 | TIMBER-TO-TIMBER

INSTALLATION ON CLT

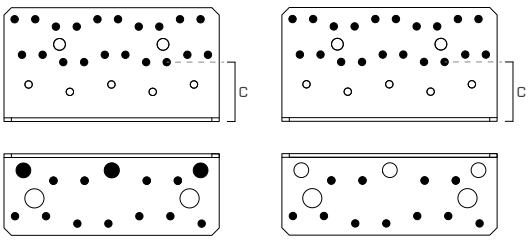

pattern 1 pattern 2

INSTALLATION ON TIMBER FRAME

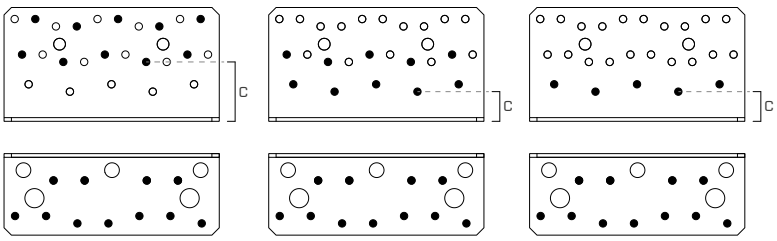

pattern 3 pattern 4 pattern 5

NINO15080 | TIMBER-TO-CONCRETE

INSTALLATION ON CLT

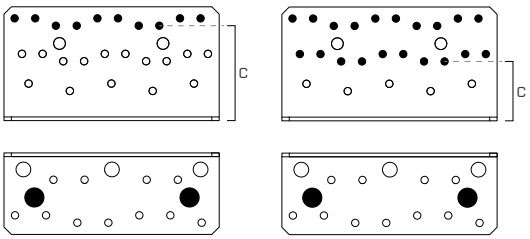

pattern 6 pattern 7

INSTALLATION ON TIMBER FRAME

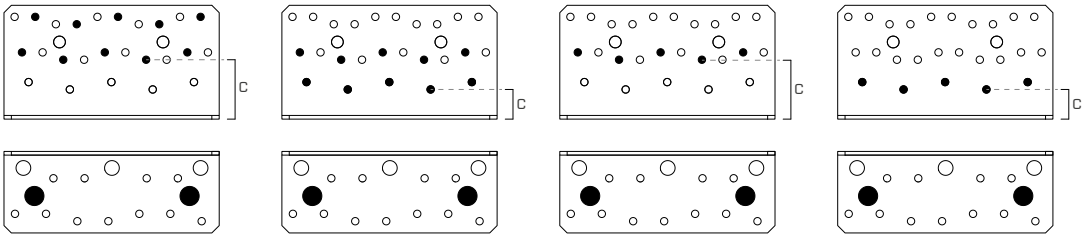

pattern 8 pattern 9 pattern 10 pattern 11

CODE	configuration	fastening holes Ø5		fastening holes Ø10	fastening holes Ø13		support	
		n_V [pcs]	n_H [pcs]	n_H [pcs]	n_H [pcs]	c [mm]		
NINO15080	pattern 1	20	11	3	-	40	●	-
	pattern 2	20	11	-	-	40	●	-
	pattern 3	10	11	-	-	40	●	-
	pattern 4	10	11	-	-	20	●	-
	pattern 5	5	11	-	-	20	●	-
	pattern 6	10	-	-	2	64	-	●
	pattern 7	20	-	-	2	40	-	●
	pattern 8	10	-	-	2	40	-	●
	pattern 9	10	-	-	2	20	-	●
	pattern 10	5	-	-	2	40	-	●
	pattern 11	5	-	-	2	20	-	●

FASTENING PATTERNS

NINO100200 | TIMBER-TO-TIMBER

INSTALLATION ON CLT

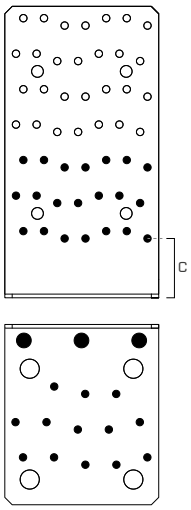

pattern 1

NINO100200 | TIMBER-TO-CONCRETE

INSTALLATION ON CLT

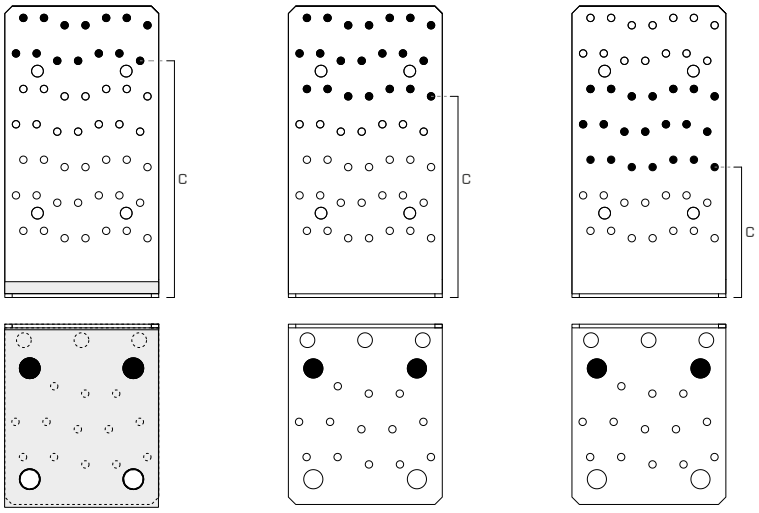

pattern 2 **pattern 3** **pattern 5**

CODE	configuration	fastening holes Ø5		fastening holes Ø10	fastening holes Ø13		support	
		n_V [pcs]	n_H [pcs]	n_H [pcs]	n_H [pcs]	c [mm]		
NINO100200	**pattern 1**	21	13	3	-	40	●	-
	pattern 2(*)	14	-	-	2	160	-	●
	pattern 3	21	-	-	2	136	-	●
	pattern 5	21	-	-	2	88	-	●

(*) Installation with washer NINOW100200.

INSTALLATION

MAXIMUM HEIGHT OF THE INTERMEDIATE H_B LAYER

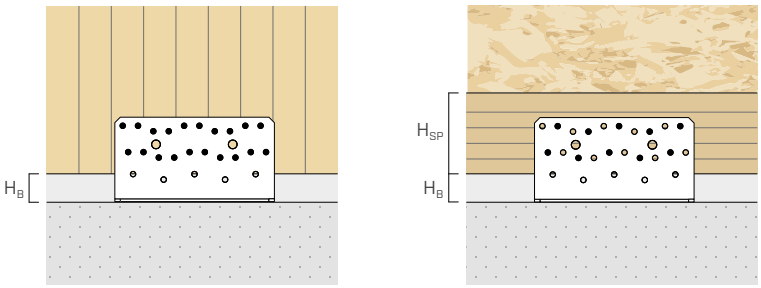

INSTALLATION ON CLT

CODE	configuration	n_V holes Ø5	$H_{B\,max}$ [mm] nails LBA Ø4	$H_{B\,max}$ [mm] screws LBS Ø5
NINO100100	pattern 1	14	0	10
	pattern 2	14	0	10
	pattern 6	14	24	34
	pattern 7	14	0	10
NINO15080	pattern 1	20	0	10
	pattern 2	20	0	10
	pattern 6	10	24	34
	pattern 7	20	0	10
NINO100200	pattern 1	21	0	10
	pattern 2	14	120	130
	pattern 3	21	96	106
	pattern 5	21	48	58

INSTALLATION ON TIMBER FRAME

CODE	configuration	n_V holes Ø5	$H_{B\,max}$ [mm] nails LBA Ø4	$H_{B\,max}$ [mm] screws LBS Ø5	$H_{SP\,min}$ [mm]
NINO100100	pattern 3	8	27	27	60
	pattern 4	8	7	7	60
	pattern 5	4	7	7	38
	pattern 8	8	51	51	120
	pattern 10	8	7	7	60
	pattern 11	4	27	27	60
	pattern 12	4	7	7	38
NINO15080	pattern 3	10	27	27	60
	pattern 4	10	7	7	60
	pattern 5	5	7	7	38
	pattern 8	10	27	27	100
	pattern 9	10	7	7	60
	pattern 10	5	27	27	60
	pattern 11	5	7	7	38

NOTES

The height of the H_B intermediate layer (levelling grout, sill or timber platform beam) is determined by taking into account the regulatory requirements for fastenings on timber:

- CLT: minimum distances according to ÖNORM EN 1995:2014 - Annex K for nails and ETA-11/0030 for screws.
- C/GL: minimum distances for solid timber or glulam consistent with EN 1995:2014 according to ETA considering a timber density $\rho_k \leq 420$ kg/m^3.
- The minimum platform thickness $H_{SP\,min}$ was determined by considering $a_{4,c} \geq 13$ mm and $a_{4,t} \geq 13$ mm with a minimum height of 38 mm in accordance with the requirements in ETA-22/0089.

STRUCTURAL VALUES | TIMBER-TO-TIMBER | F_1

NINO100100

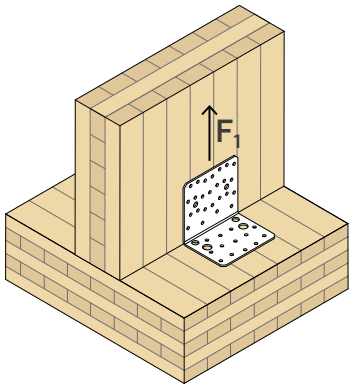

NINO15080

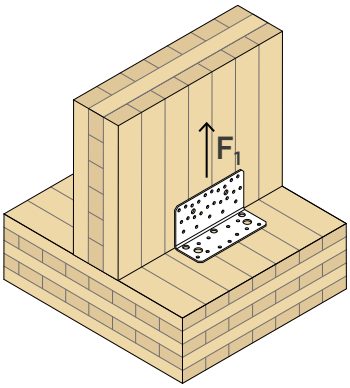

NINO100200

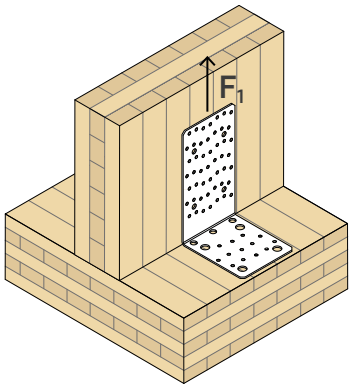

CODE	configuration on timber	fastening holes Ø5 type	Ø x L [mm]	n_V [pcs]	n_H [pcs]	$R_{1,k\ timber}$ [kN]	$K_{1,ser}$ [kN/mm]
NINO100100	pattern 1(1)	LBA	Ø4 x 60	14	13 + 2 VGS Ø9 x 140	**20,0**	$R_{1,k\ timber}$/6
		LBS	Ø5 x 50			**20,0**	
	pattern 2	LBA	Ø4 x 60	14	13	**5,9**	$R_{1,k\ timber}$/2
		LBS	Ø5 x 50			**6,8**	
NINO15080	pattern 1(1)	LBA	Ø4 x 60	20	11 + 3 VGS Ø9 x 140	**39,5(*)**	$R_{1,k\ timber}$/6
		LBS	Ø5 x 50			**39,5(*)**	
	pattern 2	LBA	Ø4 x 60	20	11	**4,0**	$R_{1,k\ timber}$/2
		LBS	Ø5 x 50			**6,0**	
NINO100200	pattern 1(1)	LBA	Ø4 x 60	21	13 + 3 VGS Ø9 x 140	**41,2**	$R_{1,k\ timber}$/5
		LBS	Ø5 x 50			**41,2**	

(*) In the case of installation coupled with an acoustic profile, the $R_{1,k\ timber}$ strength must be assumed to be 37.2 kN.

INSTALLATION WITH INCLINED SCREWS | TIMBER-TO-TIMBER

The possibility of installing inclined VGS screws in all models broadens the design possibilities and offers solutions for a wide range of applications, confirming NINO angle brackets as an excellent choice for excellent performance in terms of both shear and tensile loads.

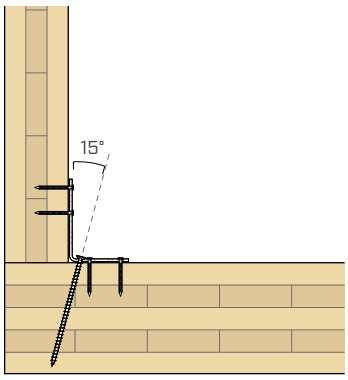

Example: installation of a NINO15080 angle bracket with inclined VGS screws

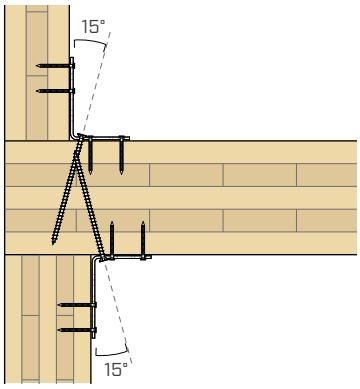

Example: installation of NINO15080 angle brackets with inclined VGS screws for fastening inter-storey walls with different thickness values

NOTES

(1) The load-bearing capacity values listed are valid for installation with Ø9 VGS screws of length ≥ 140 mm. For screws of shorter length L, $R_{1,k\ timber}$ must be multiplied by a reduction factor of L/140.

- The strength values listed are also valid for installation with XYLOFON acoustic profile below the horizontal flange.

STRUCTURAL VALUES | TIMBER-TO-CONCRETE | F_1

NINO100100

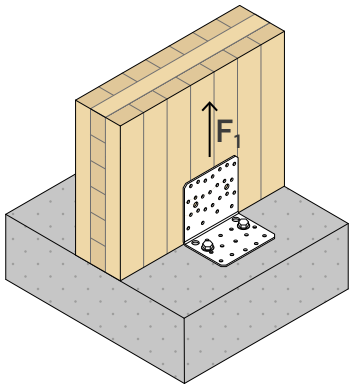

TIMBER STRENGTH

configuration on timber	fastening holes Ø5 type	Ø x L [mm]	n_V [pcs]	$R_{1,k\ timber}$ [kN]	$K_{1,ser}$ [kN/mm]
pattern 6-7	LBA	Ø4 x 60	14	**14,0**	$R_{1,k\ timber}/18$
	LBS	Ø5 x 50		**14,0**	

CONCRETE STRENGTH

Strength values of some of the possible fastening solutions.

configuration on concrete	fastening holes Ø13 type	Ø x L [mm]	n_H [pcs]	$R_{1,d\ concrete}$ [kN]	$k_{t//}$
uncracked	VIN-FIX 5.8	M12 x 140	2	**23,8**	1,21
cracked	VIN-FIX 5.8	M12 x 195		**26,2**	
seismic	HYB-FIX 8.8	M12 x 195		**15,5**	
		M12 x 245		**20,1**	
	EPO-FIX 8.8	M12 x 195		**24,0**	

ANCHORS INSTALLATION PARAMETERS

anchor type type	Ø x L [mm]	d_0 [mm]	h_{ef} [mm]	h_{nom} [mm]	h_1 [mm]	h_{min} [mm]
VIN-FIX 5.8	M12 x 140	14	115	115	115	200
	M12 x 195		170	170	175	200
HYB-FIX 8.8	M12 x 195		170	170	175	200
	M12 x 245		220	220	225	250
EPO-FIX 8.8	M12 x 195		170	170	175	200

Precut INA threaded rod, with nut and washer: see page 562.
MGS threaded rod class 8.8 to be cut to size: see page 174.
Concrete-side strength values are calculated assuming a t_{fix} thickness of 2 mm.

GENERAL PRINCIPLES

For the GENERAL PRINCIPLES of calculation, see page 215.

STRUCTURAL VALUES | TIMBER-TO-CONCRETE | F_1

NINO15080 | NINO15080 + NINOW15080

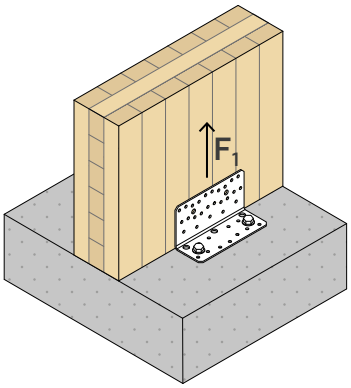

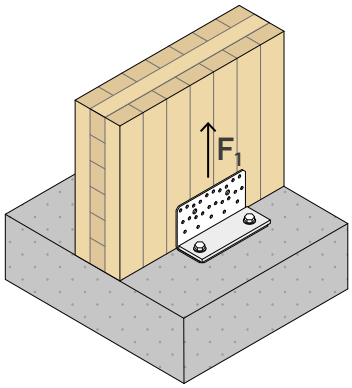

TIMBER STRENGTH

configuration on timber	fastening holes Ø5			no washer		washer	
	type	Ø x L [mm]	n_V [pcs]	$R_{1,k\ timber}$ [kN]	$K_{1,ser}$ [kN/mm]	$R_{1,k\ timber}$ [kN]	$K_{1,ser}$ [kN/mm]
pattern 6	LBA	Ø4 x 60	10	**14,7**	$R_{1,k\ timber}/16$	**24,9**	$R_{1,k\ timber}/8$
	LBS	Ø5 x 50		**14,7**		**20,9**	
pattern 7	LBA	Ø4 x 60	20	**14,7**		**24,9**	
	LBS	Ø5 x 50		**14,7**		**24,9**	

CONCRETE STRENGTH

Strength values of some of the possible fastening solutions.

configuration on concrete	fastening holes Ø13			no washer pattern 6-7		washer pattern 6-7	
	type	Ø x L [mm]	n_H [pcs]	$R_{1,d\ concrete}$ [kN]	$k_{t//}$	$R_{1,d\ concrete}$ [kN]	$k_{t//}$
uncracked	VIN-FIX 5.8	M12 x 195	2	**33,8**	1,38	**25,9**	1,75
cracked	VIN-FIX 5.8	M12 x 195		**18,8**		**14,4**	
	HYB-FIX 5.8	M12 x 195		**36,2**		**27,7**	
seismic	HYB-FIX 8.8	M12 x 195		**14,3**		**10,9**	
		M12 x 245		**18,6**		**13,9**	
	EPO-FIX 8.8	M12 x 195		**22,2**		**17,0**	

ANCHORS INSTALLATION PARAMETERS

anchor type		d_0	no washer				washer			
	[mm]	[mm]	h_{ef} [mm]	h_{nom} [mm]	h_1 [mm]	h_{min} [mm]	h_{ef} [mm]	h_{nom} [mm]	h_1 [mm]	h_{min} [mm]
VIN-FIX 5.8	M12 x 195	14	170	170	175	200	165	165	170	200
HYB-FIX 8.8	M12 x 195		170	170	175	200	165	165	170	200
	M12 x 245		220	220	225	250	210	210	215	240
EPO-FIX 8.8	M12 x 195		170	170	175	200	165	165	170	200

Precut INA threaded rod, with nut and washer: see page 562.
MGS threaded rod class 8.8 to be cut to size: see page 174.
The concrete-side strength values for installation with a washer are calculated assuming a t_{fix} thickness of 8 mm. For installation without washer, a t_{fix} value of 2 mm was assumed.

GENERAL PRINCIPLES

For the GENERAL PRINCIPLES of calculation, see page 215.

STRUCTURAL VALUES | TIMBER-TO-CONCRETE | F_1

NINO100200 | NINO100200 + NINOW100200

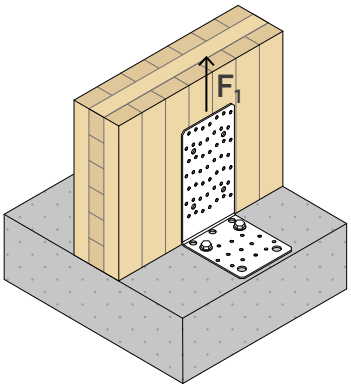

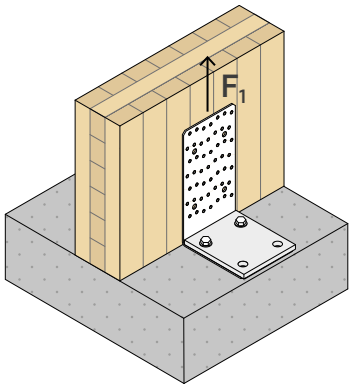

TIMBER STRENGTH

configuration on timber	fastening holes Ø5			no washer		washer	
	type	Ø x L [mm]	n_V [pcs]	$R_{1,k\ timber}$ [kN]	$K_{1,ser}$ [kN/mm]	$R_{1,k\ timber}$ [kN]	$K_{1,ser}$ [kN/mm]
pattern 2	LBA	Ø4 x 60	14	-	$R_{1,k\ timber}/16$	**34,7**	$R_{1,k\ timber}/8$
	LBS	Ø5 x 50		-		**29,3**	
pattern 3	LBA	Ø4 x 60	21	**14,7**		-	
	LBS	Ø5 x 50		**14,7**		-	
pattern 5	LBA	Ø4 x 60	21	**14,7**		-	
	LBS	Ø5 x 50		**14,7**		-	

CONCRETE STRENGTH

Strength values of some of the possible fastening solutions.

configuration on concrete	fastening holes Ø13			no washer pattern 3-5		washer pattern 2	
	type	Ø x L [mm]	n_H [pcs]	$R_{1,d\ concrete}$ [kN]	$k_{t//}$	$R_{1,d\ concrete}$ [kN]	$k_{t//}$
uncracked	VIN-FIX 5.8	M12 x 195	2	**39,0**	1,11	**34,2**	1,23
	HYB-FIX 5.8	M12 x 195		**50,4**		**45,5**	
cracked	VIN-FIX 5.8	M12 x 195		**21,8**		**19,1**	
	HYB-FIX 5.8	M12 x 195		**42,3**		**37,0**	
seismic	HYB-FIX 8.8	M12 x 195		**16,4**		**14,8**	
		M12 x 245		**22,0**		**18,9**	
	EPO-FIX 8.8	M12 x 195		**26,2**		**22,9**	

ANCHORS INSTALLATION PARAMETERS

anchor type		d_0	no washer				washer			
	[mm]	[mm]	h_{ef} [mm]	h_{nom} [mm]	h_1 [mm]	h_{min} [mm]	h_{ef} [mm]	h_{nom} [mm]	h_1 [mm]	h_{min} [mm]
VIN-FIX 5.8	M12 x 195	14	170	170	175	200	165	165	170	200
HYB-FIX 5.8	M12 x 195		170	170	175	200	165	165	170	200
HYB-FIX 8.8	M12 x 195		170	170	175	200	165	165	170	200
	M12 x 245		220	220	225	250	210	210	215	240
EPO-FIX 8.8	M12 x 195		170	170	175	200	165	165	170	200

Precut INA threaded rod, with nut and washer: see page 562.
MGS threaded rod class 8.8 to be cut to size: see page 174.
The concrete-side strength values for installation with a washer are calculated assuming a t_{fix} thickness of 11 mm. For installation without washer, a t_{fix} value of 3 mm was assumed.

GENERAL PRINCIPLES

For the GENERAL PRINCIPLES of calculation, see page 215.

ANCHORS VERIFICATION FOR STRESS LOADING F_1

INSTALLATION WITH AND WITHOUT NINO WASHER

Fastening elements to the concrete through anchors shall be verified according to the load acting on the anchor, which can be evaluated through the tabulated geometric parameters (k_t).

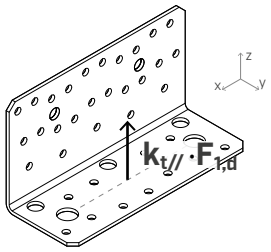

The anchor group must be verified for:

$N_{Sd,z} = k_{t//} \times F_{1,d}$

STRUCTURAL VALUES | TIMBER-TO-TIMBER | $F_{2/3}$

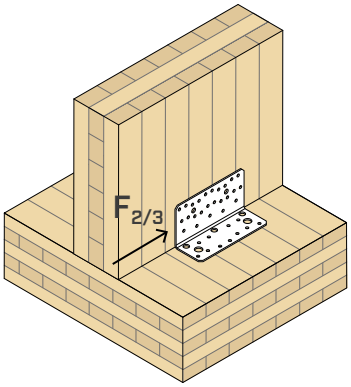

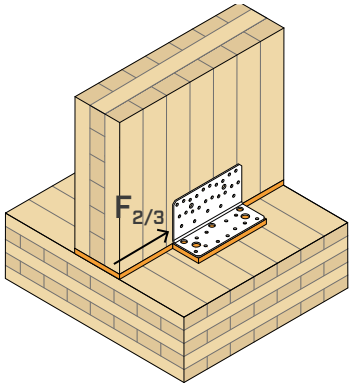

TIMBER STRENGTH

CODE	configuration on timber	fastening holes Ø5 type	Ø x L [mm]	n_V [pcs]	n_H [pcs]	no XYLOFON $R_{2/3,k\ timber}$ [kN]	XYLOFON $R_{2/3,k\ timber}$ [kN]	$K_{2/3,ser}$ [kN/mm]
NINO100100	pattern 1	LBA	Ø4 x 60	14	13 + 2 VGS Ø9 x 140	**38,1**	**34,6**	$R_{2/3,k\ timber}/5$
		LBS	Ø5 x 50			**18,5**	**16,9**	
	pattern 2	LBA	Ø4 x 60	14	13	**17,2**	**9,4**	
		LBS	Ø5 x 50			**9,5**	**7,4**	
	pattern 3	LBA	Ø4 x 60	8	13	**9,8**	**8,9**	
		LBS	Ø5 x 50			**9,0**	**7,4**	
	pattern 4	LBA	Ø4 x 60	8	13	**11,3**	**9,4**	
		LBS	Ø5 x 50			**9,5**	**7,4**	
	pattern 5	LBA	Ø4 x 60	4	13	**9,8**	**8,9**	
		LBS	Ø5 x 50			**9,0**	**7,4**	
NINO15080	pattern 1	LBA	Ø4 x 60	20	11 + 3 VGS Ø9 x 140	**38,1**	**34,6**	$R_{2/3,k\ timber}/5$
		LBS	Ø5 x 50			**27,6**	**25,5**	
	pattern 2	LBA	Ø4 x 60	20	11	**15,5**	**13,0**	
		LBS	Ø5 x 50			**13,1**	**10,2**	
	pattern 3	LBA	Ø4 x 60	10	11	**13,3**	**12,3**	
		LBS	Ø5 x 50			**12,3**	**10,1**	
	pattern 4	LBA	Ø4 x 60	10	11	**15,5**	**13,0**	
		LBS	Ø5 x 50			**13,1**	**10,2**	
	pattern 5	LBA	Ø4 x 60	5	11	**12,7**	**11,8**	
		LBS	Ø5 x 50			**11,2**	**10,0**	
NINO100200	pattern 1	LBA	Ø4 x 60	21	13 + 3 VGS Ø9 x 140	**26,7**	**18,7**	$R_{2/3,k\ timber}/5$
		LBS	Ø5 x 50			**18,7**	**17,2**	

GENERAL PRINCIPLES

For the GENERAL PRINCIPLES of calculation, see page 215.

STRUCTURAL VALUES | TIMBER-TO-CONCRETE | $F_{2/3}$

NINO100100

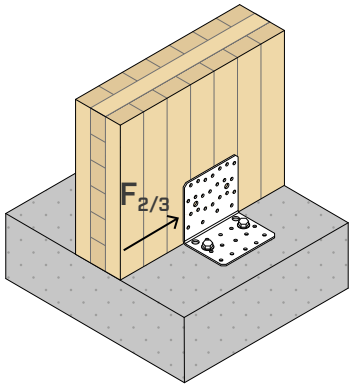

TIMBER STRENGTH

configuration on timber	fastening holes Ø5 type	Ø x L [mm]	n_V [pcs]	$R_{2/3,k\ timber}$ [kN]	$K_{2/3,ser}$ [kN/mm]
pattern 6	LBA	Ø4 x 60	14	**18,1**	$R_{2/3,k\ timber}/5$
	LBS	Ø5 x 50		**7,2**	
pattern 7	LBA	Ø4 x 60	14	**18,1**	
	LBS	Ø5 x 50		**9,8**	
pattern 8	LBA	Ø4 x 60	8	**5,8**	
	LBS	Ø5 x 50		**4,9**	
pattern 10	LBA	Ø4 x 60	8	**11,2**	
	LBS	Ø5 x 50		**9,4**	
pattern 11	LBA	Ø4 x 60	4	**9,3**	$R_{2/3,k\ timber}/2$
	LBS	Ø5 x 50		**4,2**	
pattern 12	LBA	Ø4 x 60	4	**9,3**	
	LBS	Ø5 x 50		**6,3**	

CONCRETE STRENGTH

Strength values of some of the possible fastening solutions.

configuration on concrete	fastening holes Ø14 type	Ø x L [mm]	n_H [pcs]	$R_{2/3,d\ concrete}$ [kN]	e_y [mm]
uncracked	VIN-FIX 5.8	M12 x 140	2	**30,3**	30
	SKR	12 x 90		**22,8**	
	AB1	M12 x 100		**30,7**	
cracked	VIN-FIX 5.8	M12 x 140	2	**26,9**	
	HYB-FIX 5.8	M12 x 140		**30,2**	
	SKR	12 x 90		**15,9**	
	AB1	M12 x 100		**26,5**	
seismic	HYB-FIX 8.8	M12 x 140	2	**14,8**	
		M12 x 195		**21,0**	
	EPO-FIX 8.8	M12 x 140		**23,8**	
	SKR	12 x 90		**6,0**	
	AB1	M12 x 100		**7,6**	

GENERAL PRINCIPLES

For the GENERAL PRINCIPLES of calculation, see page 215.

STRUCTURAL VALUES | TIMBER-TO-CONCRETE | $F_{2/3}$

NINO15080 | NINO15080 + NINOW15080

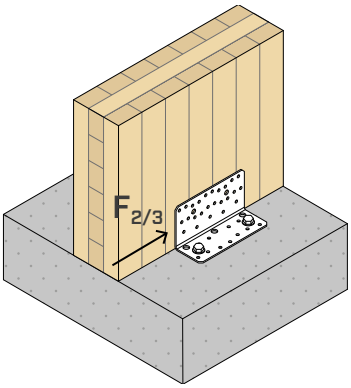

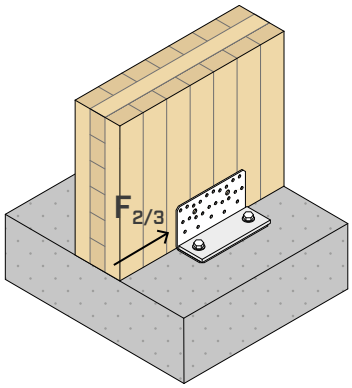

TIMBER STRENGTH

configuration on timber	fastening holes Ø5 type	Ø x L [mm]	n_V [pcs]	no washer $R_{2/3,k\ timber}$ [kN]	washer $R_{2/3,k\ timber}$ [kN]
pattern 6	LBA LBS	Ø4 x 60 Ø5 x 50	10	**21,1** **7,9**	**26,7** **7,9**
pattern 7	LBA LBS	Ø4 x 60 Ø5 x 50	20	**21,3** **17,9**	**21,3** **17,9**
pattern 8	LBA LBS	Ø4 x 60 Ø5 x 50	10	**11,0** **9,3**	**11,0** **9,3**
pattern 9	LBA LBS	Ø4 x 60 Ø5 x 50	10	**15,7** **13,2**	**15,7** **13,2**
pattern 10	LBA LBS	Ø4 x 60 Ø5 x 50	5	**9,3** **6,0**	**9,3** **6,0**
pattern 11	LBA LBS	Ø4 x 60 Ø5 x 50	5	**10,0** **8,5**	**10,0** **8,5**

CONCRETE STRENGTH

Strength values of some of the possible fastening solutions.

configuration on concrete	fastening holes Ø13 type	Ø x L [mm]	n_H [pcs]	no washer $R_{2/3,d\ concrete}$ [kN]	washer pattern 6 $R_{2/3,d\ concrete}$ [kN]	washer pattern 7-8-9-10-11 $R_{2/3,d\ concrete}$ [kN]	e_y [mm]	pattern 6 e_z[(1)] [mm]
uncracked	VIN-FIX 5.8	M12 x 140	2	**34,8**	**26,5**	**34,8**	30	66,5
	VIN-FIX 8.8	M12 x 195		**47,2**	**39,2**	**47,4**		
	SKR	12 x 90		**29,7**	**13,8**	**29,7**		
	AB1	M12 x 100		**35,2**	-	-		
		M12 x 120		-	**23,4**	**35,2**		
cracked	VIN-FIX 5.8	M12 x 140	2	**34,4**	**14,7**	**33,0**		
		M12 x 195		-	**21,6**	**34,8**		
	HYB-FIX 8.8	M12 x 140		**47,2**	**28,5**	**47,4**		
	SKR	12 x 90		**20,8**	**8,7**	**20,8**		
	AB1	M12 x 100		**34,3**	-	-		
		M12 x 120		-	**14,4**	**34,2**		
seismic	HYB-FIX 8.8	M12 x 140	2	**18,4**	**8,8**	**17,8**		
		M12 x 195		**26,2**	**13,0**	**26,1**		
	EPO-FIX 8.8	M12 x 140		**28,5**	**14,1**	**28,4**		
	SKR	12 x 90		**7,8**	-	**7,8**		
	AB1	M12 x 120		**8,8**	-	**8,8**		

NOTES

(1) For patterns 7-8-9-10-11, eccentricity e_z is assumed to be zero, in accordance with ETA-22/0089.

GENERAL PRINCIPLES

For the GENERAL PRINCIPLES of calculation, see page 215.

STRUCTURAL VALUES | TIMBER-TO-CONCRETE | $F_{2/3}$

NINO100200 | NINO100200 + NINOW100200

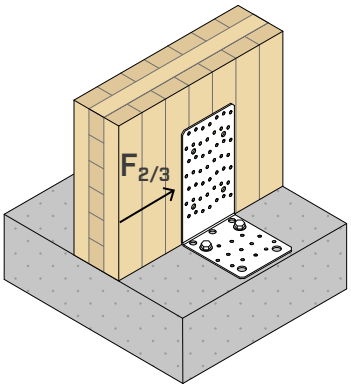

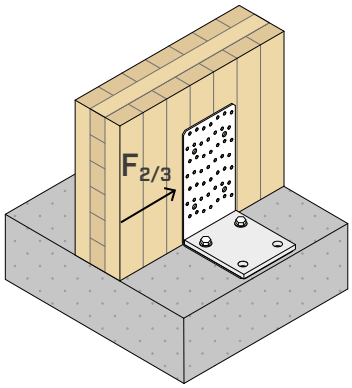

TIMBER STRENGTH

configuration on timber	fastening holes Ø5			no washer	washer
	type	Ø x L [mm]	n_V [pcs]	$R_{2/3,k\ timber}$ [kN]	$R_{2/3,k\ timber}$ [kN]
pattern 2	LBA	Ø4 x 60	10	-	**11,6**
	LBS	Ø5 x 50		-	**3,5**
pattern 3	LBA	Ø4 x 60	10	**10,7**	-
	LBS	Ø5 x 50		**6,0**	-
pattern 5	LBA	Ø4 x 60	20	**16,9**	-
	LBS	Ø5 x 50		**8,3**	-

CONCRETE STRENGTH

Strength values of some of the possible fastening solutions.

configuration on concrete	fastening holes Ø13			no washer pattern 3-5	washer pattern 2		
	type	Ø x L [mm]	n_H [pcs]	$R_{2/3,d\ concrete}$ [kN]	$R_{2/3,d\ concrete}$ [kN]	e_y [mm]	pattern 2 e_z[(1)] [mm]
uncracked	VIN-FIX 5.8	M12 x 195	2	**30,3**	**11,4**	30	174,5
	VIN-FIX 8.8	M12 x 195		**41,2**	**12,5**		
	SKR	12 x 90		**22,7**	-		
		12 x 110		-	**4,6**		
	AB1	M12 x 100		**30,7**	-		
		M12 x 120		-	**7,9**		
cracked	VIN-FIX 8.8	M12 x 195	2	**38,1**	**6,8**		
	HYB-FIX 8.8	M12 x 195		**41,2**	**14,3**		
	SKR	12 x 90		**15,9**	-		
	AB1	M12 x 100		**26,4**	-		
		M12 x 120		-	**4,6**		
seismic	HYB-FIX 8.8	M12 x 140	2	**14,8**	-		
		M12 x 195		**21,0**	**5,0**		
	EPO-FIX 8.8	M12 x 140		**23,7**	**5,5**		
	SKR	12 x 90		**6,0**	-		
	AB1	M12 x 100		**7,7**	-		

NOTES

(1) For patterns 3-5, eccentricity e_z is assumed to be zero.

GENERAL PRINCIPLES

For the GENERAL PRINCIPLES of calculation, see page 215.

ANCHORS INSTALLATION PARAMETERS

anchor type		d_0	h_{min}	no washer			washer		
type	Ø x L [mm]	[mm]	[mm]	h_{ef} [mm]	h_{nom} [mm]	h_1 [mm]	h_{ef} [mm]	h_{nom} [mm]	h_1 [mm]
VIN-FIX 5.8	M12 x 140	14	200	120	120	125	115	115	120
	M12 x 195	14		170	170	175	170	170	175
VIN-FIX 8.8	M12 x 195	14		170	170	175	170	170	175
HYB-FIX 8.8	M12 x 140	14		120	120	125	115	115	120
	M12 x 195	14		170	170	175	170	170	175
EPO-FIX 8.8	M12 x 140	14		120	120	125	115	115	120
SKR	12 x 90	10		64	88	110	64	82	105
	12 x 110	10		-	-	-	64	99	120
AB1	M12 x 100	12		70	80	85	-	-	-
	M12 x 120	12		-	-	-	70	80	85

Pre-cut INA class 5.8 / 8.8 threaded rod, including nut and washer.

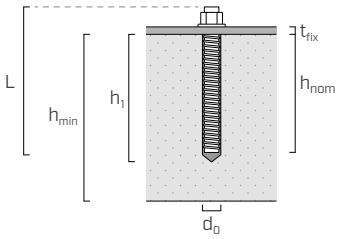

t_{fix}	fastened plate thickness
h_{nom}	nominal anchoring depth
h_{ef}	effective anchoring depth
h_1	minimum hole depth
d_0	hole diameter in the concrete support
h_{min}	concrete minimum thickness

ANCHORS VERIFICATION FOR STRESS LOADING $F_{2/3}$

INSTALLATION WITHOUT WASHER

Fastening elements to the concrete through anchors shall be verified according to the load acting on the anchor, which can be evaluated through the tabulated geometric parameters (e).

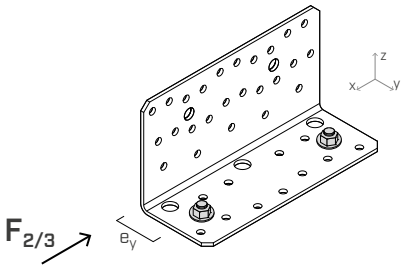

The anchor group must be verified for:

$V_{Sd,x} = F_{2/3,d}$
$M_{Sd,z} = F_{2/3,d} \cdot e_y$

INSTALLATION WITH WASHER

In the case of installation with washer, the fastening elements to the concrete through anchors must be verified according to the load acting on the anchor, which can be evaluated through the tabulated geometric parameters (e).

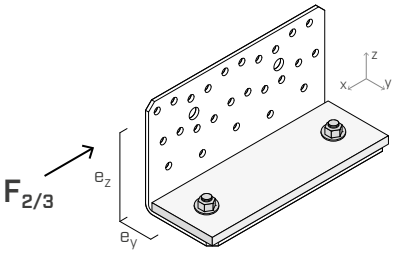

The anchor group must be verified for:

$V_{Sd,x} = F_{2/3,d}$
$M_{Sd,z} = F_{2/3,d} \cdot e_y$
$M_{Sd,y} = F_{2/3,d} \cdot e_z$

STRUCTURAL VALUES | TIMBER-TO-TIMBER | F_4 | F_5 | $F_{4/5}$

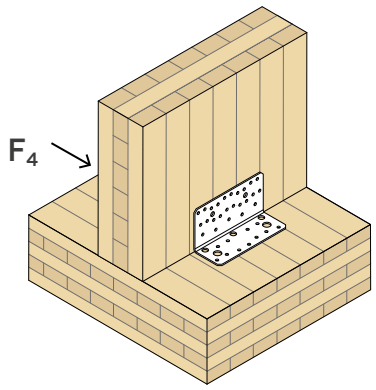

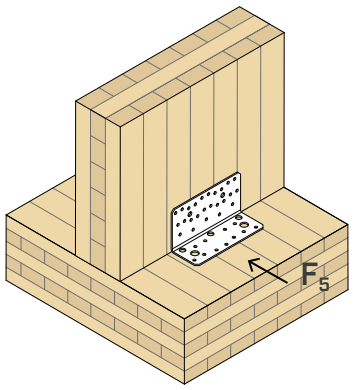

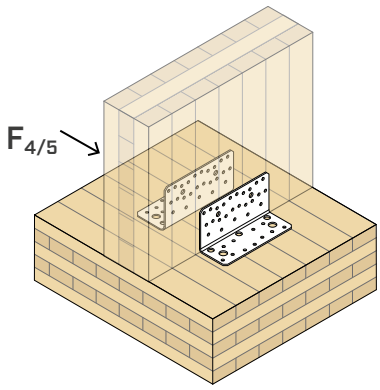

		TIMBER						
CODE	configuration	fastening holes Ø5				$R_{4,k\ timber}$	$R_{5,k\ timber}$	$R_{4/5,k\ timber}$
		type	Ø x L [mm]	n_V [pcs]	n_H [pcs]	[kN]	[kN]	[kN]
NINO100100	pattern 1	LBA	Ø4 x 60	14	13 + 2 VGS Ø9 x 140	**23,2**	**1,8**	**25,0**
		LBS	Ø5 x 50			**22,0**	**1,8**	**23,8**
	pattern 2	LBA	Ø4 x 60	14	13	**23,2**	**1,8**	**25,0**
		LBS	Ø5 x 50			**22,0**	**1,8**	**23,8**
	pattern 3	LBA	Ø4 x 60	8	13	**7,4**	**1,8**	**9,2**
		LBS	Ø5 x 50			**7,4**	**1,8**	**9,2**
	pattern 4	LBA	Ø4 x 60	8	13	**23,2**	**3,4**	**26,6**
		LBS	Ø5 x 50			**22,0**	**3,4**	**25,4**
	pattern 5	LBA	Ø4 x 60	4	13	**9,2**	**3,4**	**12,6**
		LBS	Ø5 x 50			**9,2**	**3,4**	**12,6**
NINO15080	pattern 1	LBA	Ø4 x 60	20	11 + 3 VGS Ø9 x 140	**22,3**	**2,5**	**24,8**
		LBS	Ø5 x 50			**21,6**	**2,5**	**24,1**
	pattern 2	LBA	Ø4 x 60	20	11	**22,3**	**2,5**	**24,8**
		LBS	Ø5 x 50			**21,6**	**2,5**	**24,1**
	pattern 3	LBA	Ø4 x 60	10	11	**10,2**	**2,5**	**12,7**
		LBS	Ø5 x 50			**10,2**	**2,5**	**12,7**
	pattern 4	LBA	Ø4 x 60	10	11	**18,7**	**4,8**	**23,5**
		LBS	Ø5 x 50			**17,7**	**4,8**	**22,5**
	pattern 5	LBA	Ø4 x 60	5	11	**14,7**	**4,8**	**19,5**
		LBS	Ø5 x 50			**14,7**	**4,8**	**19,5**
NINO100200	pattern 1	LBA	Ø4 x 60	21	13 + 3 VGS Ø9 x 140	**19,1**	**2,6**	**21,7**
		LBS	Ø5 x 50			**19,1**	**2,6**	**21,7**

NOTES

- The F_4, F_5, $F_{4/5}$ values in the table are valid for calculation eccentricity e=0 (timber elements prevented from rotating).
- Refer to ETA-22/0089 for $K_{4,ser}$ stiffness values in timber-to-timber and timber-to-concrete configuration.
- The strength values listed are also valid for installation with XYLOFON acoustic profile below the horizontal flange.

STRUCTURAL VALUES | TIMBER-TO-CONCRETE | F_4 | F_5 | $F_{4/5}$

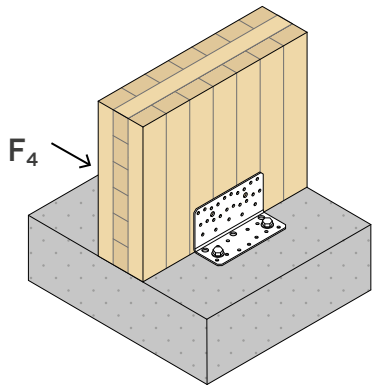

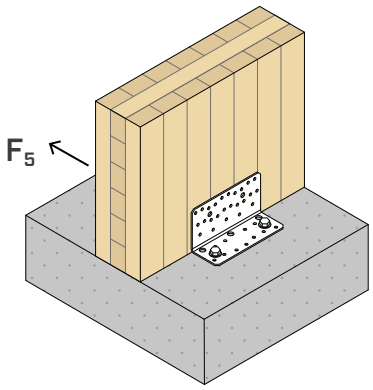

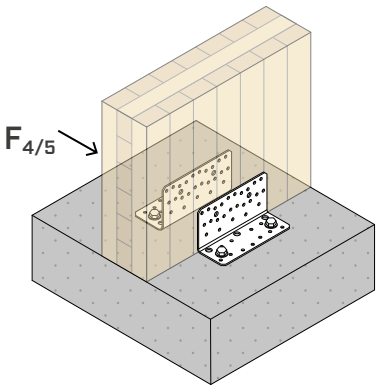

		TIMBER					
CODE	configuration	fastening holes Ø5			$R_{4,k\ timber}$	$R_{5,k\ timber}$	$R_{4/5,k\ timber}$
		type	Ø x L [mm]	n_V [pcs]	[kN]	[kN]	[kN]
NINO100100	pattern 6	LBA	Ø4 x 60	14	**6,2**	**1,1**	**7,4**
		LBS	Ø5 x 50		**6,2**	**1,1**	**7,4**
	pattern 7	LBA	Ø4 x 60	14	**23,2**	**1,8**	**25,0**
		LBS	Ø5 x 50		**22,0**	**1,8**	**23,8**
	pattern 8	LBA	Ø4 x 60	8	**3,8**	**1,1**	**5,0**
		LBS	Ø5 x 50		**3,8**	**1,1**	**5,0**
	pattern 10	LBA	Ø4 x 60	8	**14,4**	**3,4**	**17,8**
		LBS	Ø5 x 50		**13,6**	**3,4**	**17,0**
	pattern 11	LBA	Ø4 x 60	4	**6,3**	**1,8**	**8,1**
		LBS	Ø5 x 50		**5,9**	**1,8**	**7,7**
	pattern 12	LBA	Ø4 x 60	4	**9,2**	**3,4**	**12,6**
		LBS	Ø5 x 50		**9,2**	**3,4**	**12,6**
NINO15080	pattern 6	LBA	Ø4 x 60	10	**8,7**	**1,6**	**10,3**
		LBS	Ø5 x 50		**8,7**	**1,6**	**10,3**
	pattern 7	LBA	Ø4 x 60	20	**22,3**	**2,5**	**24,8**
		LBS	Ø5 x 50		**21,6**	**2,5**	**24,1**
	pattern 8	LBA	Ø4 x 60	10	**10,2**	**2,5**	**12,7**
		LBS	Ø5 x 50		**10,2**	**2,5**	**12,7**
	pattern 9	LBA	Ø4 x 60	10	**18,7**	**4,8**	**23,5**
		LBS	Ø5 x 50		**17,7**	**4,8**	**22,5**
	pattern 10	LBA	Ø4 x 60	5	**8,4**	**2,5**	**10,9**
		LBS	Ø5 x 50		**7,9**	**2,5**	**10,4**
	pattern 11	LBA	Ø4 x 60	5	**11,6**	**4,8**	**16,4**
		LBS	Ø5 x 50		**11,6**	**4,8**	**16,4**
NINO100200	pattern 2	LBA	Ø4 x 60	14	**2,1**	**0,7**	**2,8**
		LBS	Ø5 x 50		**2,1**	**0,7**	**2,8**
	pattern 3	LBA	Ø4 x 60	21	**2,6**	**0,8**	**3,4**
		LBS	Ø5 x 50		**2,6**	**0,8**	**3,4**
	pattern 5	LBA	Ø4 x 60	21	**4,9**	**1,2**	**6,1**
		LBS	Ø5 x 50		**4,9**	**1,2**	**6,1**

NOTES

- The F_4, F_5, $F_{4/5}$ values in the table are valid for the calculation eccentricity e=0 (timber elements prevented from rotating).
- Refer to ETA-22/0089 for $K_{4,ser}$ stiffness values in timber-to-timber and timber-to-concrete configuration.

GENERAL PRINCIPLES

- Characteristic values comply with the EN1995:2014 standard in accordance with ETA-22/0089.
- Design values can be obtained from values in the table as follows:

$$R_d = min \left\{ \begin{array}{l} \dfrac{R_{k\ timber} \cdot k_{mod}}{\gamma_M} \\ R_{d\ concrete} \end{array} \right.$$

The coefficients k_{mod} and γ_M should be taken according to the current regulations used for the calculation.

- The characteristic values of the load-bearing capacity $R_{k\ timber}$ are determined for the combined timber-side and steel-side failure.
- Installation with nails and screws of shorter length than proposed in the table is possible. In this case, the bearing capacity values $R_{k\ timber}$ must be multiplied by the following reductive factor k_F:

  - for nails

$$k_F = min \left\{ \frac{F_{v,short,Rk}}{2{,}66\ kN} ; \frac{F_{ax,short,Rk}}{1{,}28\ kN} \right\}$$

  - for screws

$$k_F = min \left\{ \frac{F_{v,short,Rk}}{2{,}25\ kN} ; \frac{F_{ax,short,Rk}}{2{,}63\ kN} \right\}$$

  $F_{v,short,Rk}$ = *characteristic shear strength of the nail or screw*

  $F_{ax,short,Rk}$ = *characteristic withdrawal strength of the nail or screw*
- Dimensioning and verification of timber and concrete elements must be carried out separately. Verify that there are no brittle failures before reaching the connection strength.
- Structural elements in timber, to which the connection devices are fastened, must be prevented from rotating.
- A timber density of ρ_k = 350 kg/m^3 was considered for the calculation process. For higher ρ_k values, the strength on timber side can be converted by the k_{dens} value:

$$k_{dens} = \left(\frac{\rho_k}{350} \right)^{0,5} \quad for\ 350\ kg/m^3 \leq \rho_k \leq 420\ kg/m^3$$

$$k_{dens} = \left(\frac{\rho_k}{350} \right)^{0,5} \quad for\ LVL\ with\ \rho_k \leq 500\ kg/m^3$$

- In the calculation phase, a strength class of C25/30 concrete with thin reinforcement was considered, in the absence of spacing and distances from the edge and minimum thickness indicated in the tables listing the installation parameters of the anchors used.
- The strength values are valid for the calculation hypothesis defined in the table; for boundary conditions different from the ones in the table (e.g. minimum distances from the edge or different concrete thickness), the concrete-side anchors can be verified using MyProject calculation software according to the design requirements.
- The anchors seismic design was carried out in performance category C2, without ductility requirements on anchors (option a2) and elastic design according to EN 1992:2018, with α_{sus} = 0,6. For chemical anchors it is assumed that the annular space between the anchor and the plate hole is filled (α_{gap} = 1).
- The product ETAs for the anchors used in the concrete-side strength calculation are indicated below:
  - VIN-FIX chemical anchor according to ETA-20/0363;
  - HYB-FIX chemical anchor according to ETA-20/1285;
  - EPO-FIX chemical anchor according to ETA-23/0419;
  - SKR screw-in anchor according to ETA-24/0024;
  - AB1 mechanical anchor according to ETA-17/0481 (M12).

INTELLECTUAL PROPERTY

- NINO angle brackets are protected by the following patents:
  - EP3.568.535;
  - US10.655.320;
  - CA3.049.483.
- They are also protected by the following Registered Community Designs:
  - RCD 015032190-0016;
  - RCD 015032190-0017;
  - RCD 015032190-0018;
  - RCD 015051914-0001.

TITAN N

ANGLE BRACKET FOR SHEAR AND TENSILE FORCES

HIGH HOLES
Ideal for CLT, it is easy to install thanks to the raised holes. Values also certified with partial fastening for presence of bedding grout or base plate.

80 kN SHEAR
Exceptional shear strengths. Up to 82,6 kN on concrete (with TCW washer). Up to 58,0 kN on timber.

70 kN TENSILE
On concrete, TCN angle brackets with TCW washers provide excellent tensile strength. $R_{1,k}$ up to 69,8 kN characteristic values.

USA, Canada and more design values available online.

CE
ETA-11/0496

SERVICE CLASS SC1 SC2

MATERIAL

DX51D Z275 **TITAN N:** DX51D + Z275 carbon steel.

S235 Fe/Zn12c **TITAN WASHER:** S235 + Fe/Zn12c carbon steel

EXTERNAL LOADS

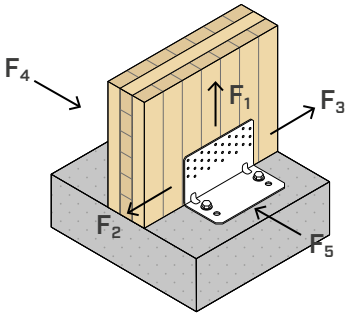

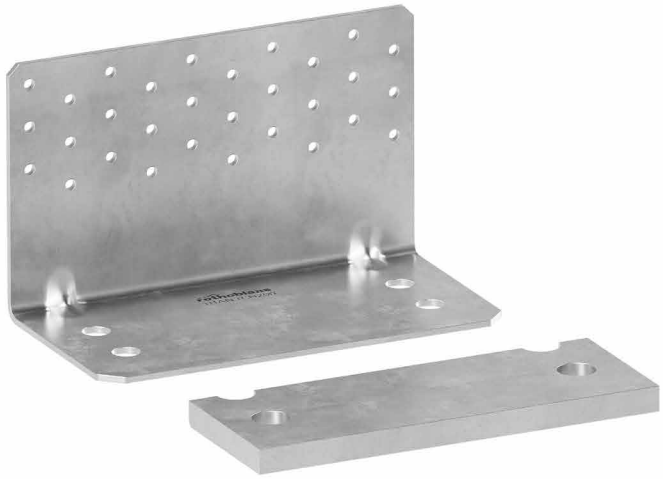

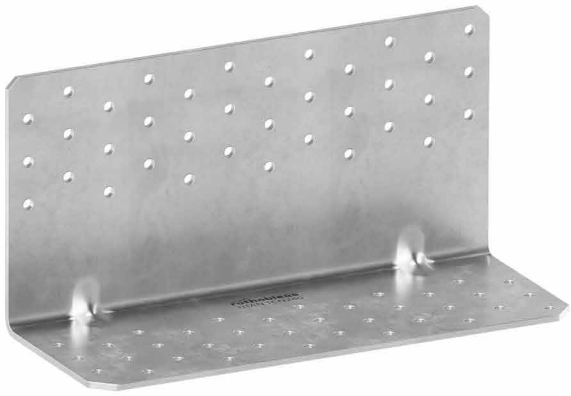



FIELDS OF USE

Shear and tension joints for timber walls. Suitable for walls subject to high stress. Timber-to-timber, timber-to-concrete and timber-to-steel configurations.

Can be applied to:
- solid timber and glulam
- CLT and LVL panels

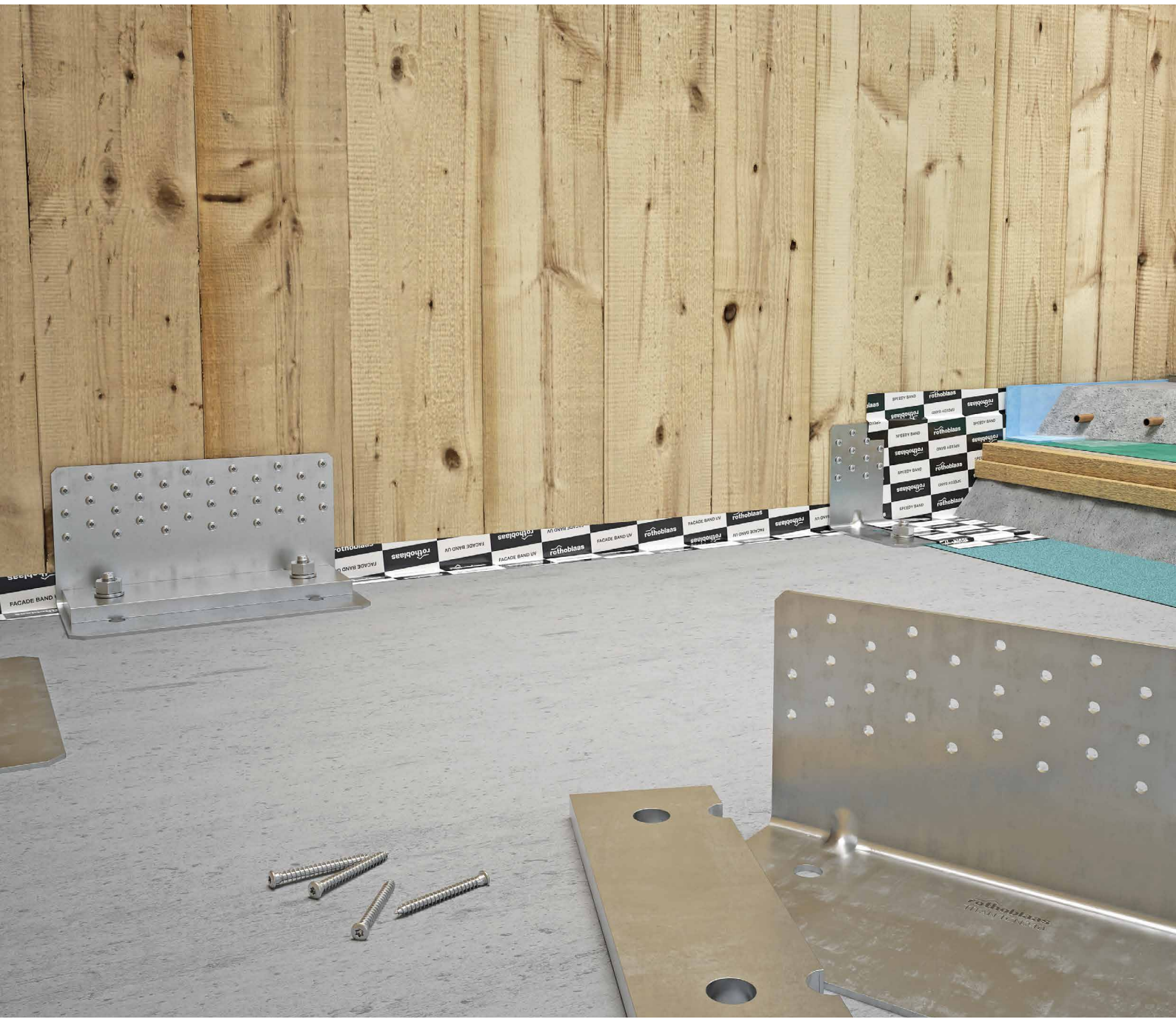



CONCEALED HOLD DOWN

Ideal on timber-to-concrete both as a hold down at the ends of the walls and as shear angle bracket along the walls. It can be integrated into the floor package due to its height of 120 mm.

TIMBER-TO-TIMBER

It can also be used in connections between CLT panels.

CODES AND DIMENSIONS

TITAN N - TCN | CONCRETE-TO-TIMBER JOINTS

CODE	B [mm] *[in]*	P [mm] *[in]*	H [mm] *[in]*	holes [mm] *[in]*	n_V Ø5 *n_V Ø.20* [pcs]	s [mm] *[in]*		pcs
TCN200	200 *8*	103 *4 1/16*	120 *4 3/4*	Ø13 *Ø0.52*	30	3 *0.12*	●	10
TCN240	240 *9 1/2*	123 *4 13/16*	120 *4 3/4*	Ø17 *Ø0.67*	36	3 *0.12*	●	10

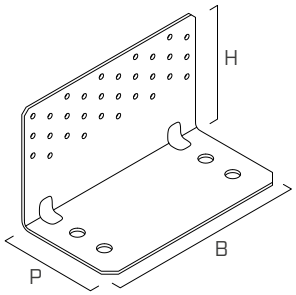

TITAN WASHER - TCW | CONCRETE-TO-TIMBER JOINTS

CODE	TCN200	TCN240	B [mm] *[in]*	P [mm] *[in]*	s [mm] *[in]*	holes [mm] *[in]*		pcs
TCW200	●	-	190 *7 1/2*	72 *2 13/16*	12 *0.47*	Ø14 *Ø0.56*	●	1
TCW240	-	●	230 *9 1/16*	73 *2 7/8*	12 *0.47*	Ø18 *Ø0.71*	●	1

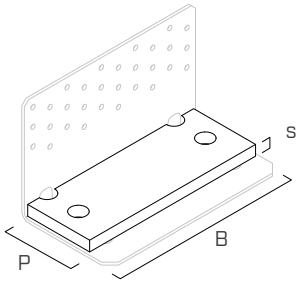

TITAN N - TTN | TIMBER-TO-TIMBER JOINTS

CODE	B [mm] *[in]*	P [mm] *[in]*	H [mm] *[in]*	n_H Ø5 *n_H Ø.20* [pcs]	n_V Ø5 *n_V Ø.20* [pcs]	s [mm] *[in]*		pcs
TTN240	240 *9 1/2*	93 *3 11/16*	120 *4 3/4*	36	36	3 *0.12*	●	10

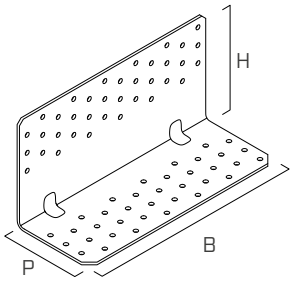

ACOUSTIC PROFILE | TIMBER-TO-TIMBER JOINTS

CODE	type	B [mm] *[in]*	P [mm] *[in]*	s [mm] *[in]*		pcs
XYL3590240	XYLOFON PLATE	240 *9 1/2*	120 *4 3/4*	6 *0.24*	●	10

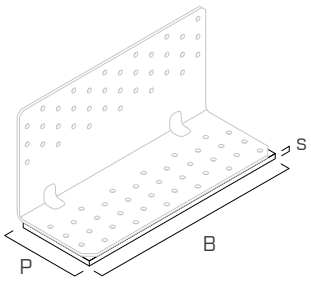

FASTENERS

type	description		d [mm]	support	page
LBA	high bond nail		4		570
LBS	round head screw		5		571
LBS EVO	C4 EVO round head screw		5		571
AB1	CE1 expansion anchor		12 - 16		536
SKR	screw-in anchor		12 - 16		528
VIN-FIX	vinyl ester chemical anchor		M12 - M16		545
HYB-FIX	hybrid chemical anchor		M12 - M16		552
EPO-FIX	epoxy chemical anchor		M12 - M16		557

GEOMETRY

TCN200

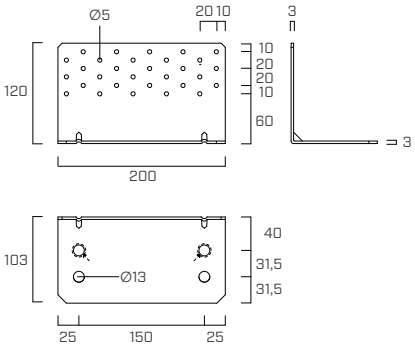

TCN240

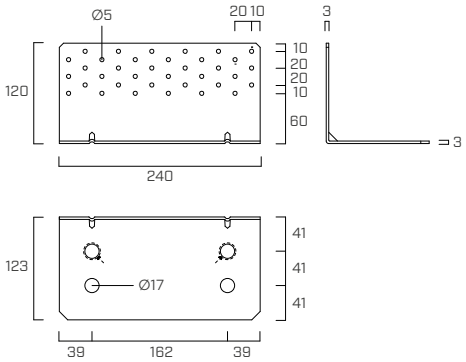

TTN240

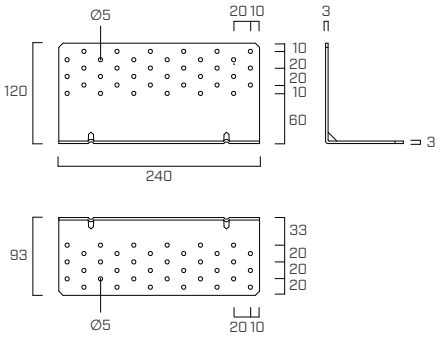

TCW200

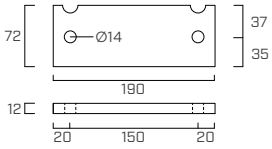

TCW240

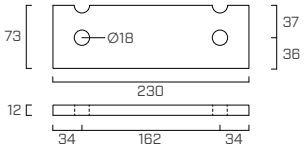

FASTENING PATTERNS

FASTENINGS FOR $F_{2/3}$ STRESS

In the presence of design requirements such as $F_{2/3}$ stresses of different value or the presence of an intermediate H_B layer (levelling grout, sill or ground) between the wall and the supporting surface, partial fastening patterns can be adopted:

TCN200

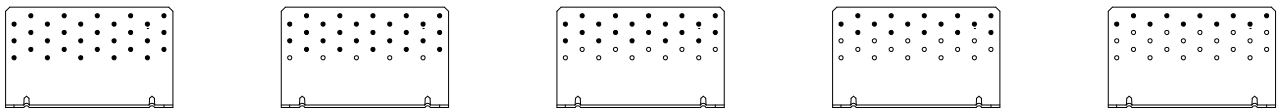

full pattern | **pattern 4** | **pattern 3** | **pattern 2** | **pattern 1**

TCN240

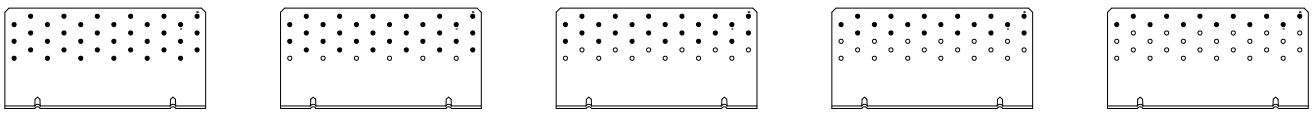

full pattern | **pattern 4** | **pattern 3** | **pattern 2** | **pattern 1**

Pattern 2 also applies in case of F_4, F_5 and $F_{4/5}$ stresses.

INSTALLATION

To fix **TITAN TCN** angle bracket to the concrete foundation, **2 anchors** must be used, according to one of the following installation configurations, according to the acting stress.

ideal installation

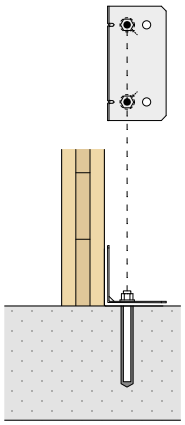

2 anchors positioned in the INTERNAL HOLES (**IN**) (identified by a mark on the product)

$e=e_{y,IN}$

Reduced stress on the anchor (minimum e_y and k_t eccentricity)

Optimized connection strength

alternative installation

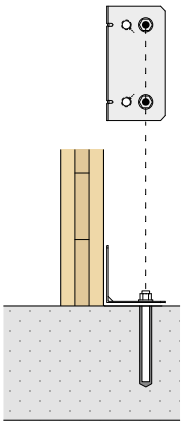

2 anchors placed in the EXTERNAL HOLES (**OUT**) (e.g. in case of clash between the anchor and the concrete support reinforcement)

$e=e_{y,OUT}$

Maximum stress on the anchor (maximum e_y and k_t eccentricity)

Reduced connection strength

installation with washer

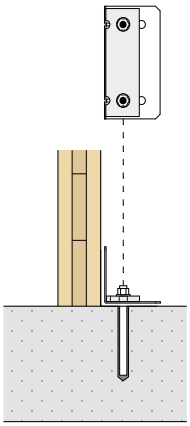

The WASHER TCW must be fastened by means of 2 anchors positioned in the INTERNAL HOLES (**IN**)

$e=e_{y,IN}$

MAXIMUM HEIGHT OF THE INTERMEDIATE H_B LAYER

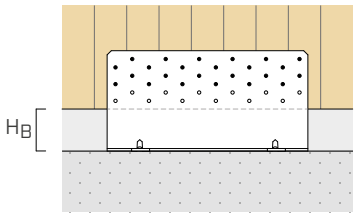

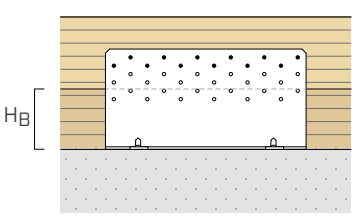

configuration on timber	n_V holes Ø5 [pcs]		CLT $H_{B\,max}$ [mm]		C/GL $H_{B\,max}$ [mm]	
	TCN200	TCN240	nails LBA Ø4	screws LBS Ø5	nails LBA Ø4	screws LBS Ø5
full pattern	30	36	20	30	32	10
pattern 4	25	30	30	40	42	20
pattern 3	20	24	40	50	52	30
pattern 2	15	18	50	60	62	40
pattern 1	10	12	60	70	72	50

The height of the H_B intermediate layer (levelling grout, sill or timber platform beam) is determined by taking into account the following regulatory requirements for fastenings on timber:

- CLT: minimum distances according to ÖNORM EN 1995:2014 (Annex K) for nails and ETA-11/0030 for screws.
- C/GL: minimum distances for solid timber or glulam with horizontal fibres consistent with EN 1995:2014 according to ETA considering a timber density of $\rho_k \leq 420$ kg/m^3.

STRUCTURAL VALUES | **TCN200** | TIMBER-TO-CONCRETE | $F_{2/3}$

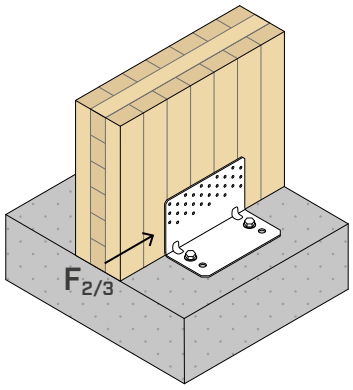

TIMBER STRENGTH

configuration on timber (1)	fastening holes Ø5 type	Ø x L [mm]	n_V [pcs]	$R_{2/3,k\ timber}$ [kN]	$K_{2/3,ser}$ [N/mm]
full pattern	LBA LBS	Ø4 x 60 Ø5 x 70	30	**30,5** **42,1**	**9000**
pattern 4	LBA LBS	Ø4 x 60 Ø5 x 70	25	**24,0** **37,9**	**7000**
pattern 3	LBA LBS	Ø4 x 60 Ø5 x 70	20	**18,8** **18,0**	-
pattern 2	LBA LBS	Ø4 x 60 Ø5 x 70	15	**13,2** **12,7**	-
pattern 1	LBA LBS	Ø4 x 60 Ø5 x 70	10	**8,8** **8,4**	-

CONCRETE STRENGTH

Strength values of some of the possible fastening solutions for anchors installed in the internal (IN) or external (OUT) holes.

configuration on concrete	fastening holes Ø13 type	Ø x L [mm]	n_H [pcs]	$R_{2/3,d\ concrete}$ IN(2) [kN]	OUT(3) [kN]	$e_{y,IN}$ [mm]	$e_{y,OUT}$ [mm]
uncracked	VIN-FIX 5.8	M12 x 140	2	**35,5**	**29,1**	**38,5**	**70**
	VIN-FIX 8.8	M12 x 140		**48,1**	**39,1**		
	SKR	12 x 90		**34,5**	**28,5**		
	AB1	M12 x 100		**35,4**	**28,9**		
cracked	VIN-FIX 5.8	M12 x 140		**35,5**	**29,1**		
	HYB-FIX 8.8	M12 x 140		**48,1**	**39,1**		
	SKR	12 x 90		**24,3**	**20,0**		
	AB1	M12 x 100		**35,4**	**28,9**		
seismic	HYB-FIX 8.8	M12 x 195		**29,0**	**23,8**		
	SKR	12 x 90		**9,0**	**7,3**		
	AB1	M12 x 100		**10,6**	**8,7**		

installation	anchor type		t_{fix}	h_{ef}	h_{nom}	h_1	d_0	h_{min}
	type	Ø x L [mm]	[mm]	[mm]	[mm]	[mm]	[mm]	[mm]
TCN200	VIN-FIX 5.8/8.8	M12 x 140	3	121	121	130	14	200
	HYB-FIX 8.8	M12 x 140	3	121	121	130	14	210
		M12 x 195	3	176	176	185	14	210
	SKR	12 x 90	3	64	87	110	10	200
	AB1	M12 x 100	3	70	80	85	12	200

t_{fix} fastened plate thickness
h_{nom} nominal anchoring depth
h_{ef} effective anchoring depth
h_1 minimum hole depth
d_0 hole diameter in the concrete support
h_{min} concrete minimum thickness

Precut INA threaded rod, with nut and washer: see page 562.
MGS threaded rod class 8.8 to be cut to size: see page 174.

NOTES

(1) Partial fastening pattern on page 219.
(2) Installation of the anchors in the two internal holes (IN).
(3) Installation of the anchors in external holes (OUT).

For the GENERAL PRINCIPLES of calculation, see page 230.
For the anchors verification refer to page 230.

STRUCTURAL VALUES | **TCN240** | TIMBER-TO-CONCRETE | $F_{2/3}$

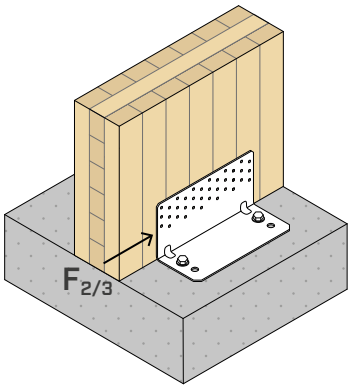

TIMBER STRENGTH

configuration on timber (1)	fastening holes Ø5			$R_{2/3,k\ timber}$	$K_{2/3,ser}$
	type	Ø x L [mm]	n_V [pcs]	[kN]	[N/mm]
full pattern	LBA LBS	Ø4 x 60 Ø5 x 70	36	**41,7** **55,2**	**12000**
pattern 4	LBA LBS	Ø4 x 60 Ø5 x 70	30	**33,1** **51,3**	**11000**
pattern 3	LBA LBS	Ø4 x 60 Ø5 x 70	24	**25,9** **24,9**	-
pattern 2	LBA LBS	Ø4 x 60 Ø5 x 70	18	**18,4** **17,6**	-
pattern 1	LBA LBS	Ø4 x 60 Ø5 x 70	12	**12,2** **11,7**	-

CONCRETE STRENGTH

Strength values of some of the possible fastening solutions for anchors installed in the internal (IN) or external (OUT) holes.

configuration on concrete	fastening holes Ø17			$R_{2/3,d\ concrete}$			
	type	Ø x L [mm]	n_H [pcs]	IN(2) [kN]	OUT(3) [kN]	$e_{y,IN}$ [mm]	$e_{y,OUT}$ [mm]
uncracked	VIN-FIX 5.8	M16 x 160	2	**67,2**	**52,9**	**39,5**	**80,5**
	VIN-FIX 8.8	M16 x 160		**90.1**	**70,9**		
	SKR	16 x 130		**65,0**	**51,2**		
	AB1	M16 x 145		**79,0**	**62,4**		
cracked	VIN-FIX 5.8/8.8	M16 x 160		**55,0**	**43.2**		
	SKR	16 x 130		**45,3**	**35,7**		
	AB1	M16 x 145		**67,0**	**53,1**		
seismic	HYB-FIX 8.8	M16 x 195		**35,2**	**27,7**		
	EPO-FIX 8.8	M16 x 195		**47,1**	**37,2**		
	SKR	16 x 130		**14,8**	**11,6**		
	AB1	M16 x 145		**21,8**	**17,2**		

installation	anchor type		t_{fix}	h_{ef}	h_{nom}	h_1	d_0	h_{min}
	type	Ø x L [mm]	[mm]	[mm]	[mm]	[mm]	[mm]	[mm]
TCN240	VIN-FIX 5.8 /8.8	M16 x 160	3	134	134	140	18	200
	HYB-FIX 8.8	M16 x 195	3	164	164	170	18	
	EPO-FIX 8.8	M16 x 195	3	164	164	170	18	
	SKR	16 x 130	3	85	127	150	14	
	AB1	M16 x 145	3	85	97	105	16	

t_{fix} fastened plate thickness
h_{nom} nominal anchoring depth
h_{ef} effective anchoring depth
h_1 minimum hole depth
d_0 hole diameter in the concrete support
h_{min} concrete minimum thickness

Precut INA threaded rod, with nut and washer: see page 562.
MGS threaded rod class 8.8 to be cut to size: see page 174.

NOTES

(1) Partial fastening pattern on page 219.
(2) Installation of the anchors in the two internal holes (IN).
(3) Installation of the anchors in external holes (OUT).

For the GENERAL PRINCIPLES of calculation, see page 230.
For the anchors verification refer to page 230.

STRUCTURAL VALUES | **TCN200 - TCN240** | TIMBER-TO-CONCRETE | F_4 | F_5 | $F_{4/5}$

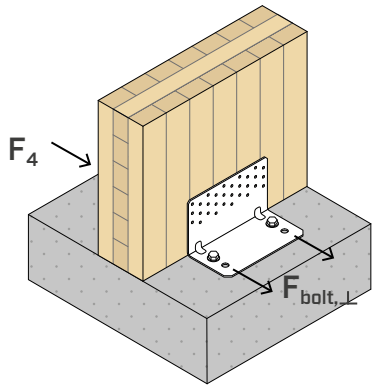

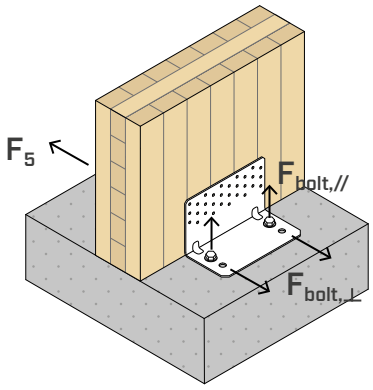

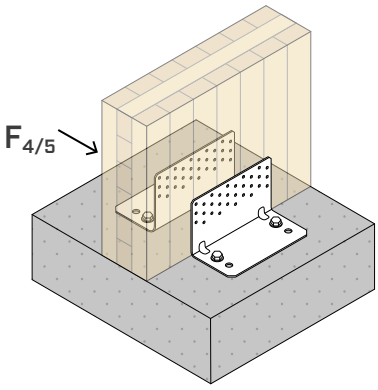

		TIMBER				STEEL		CONCRETE			
F_4		fastening holes Ø5 type	Ø x L [mm]	n_V [pcs]	$R_{4,k\ timber}$ [kN]	$R_{4,k\ steel}$ [kN]	γ_{steel}	fastening holes Ø [mm]	n_H [pcs]	IN(1) $k_{t\perp}$	IN(1) $k_{t//}$
TCN200	full pattern	LBA LBS	Ø4 x 60 Ø5 x 70	30	**20,9**	**22,4**	γ_{M0}	M12	2	0,5	-
	pattern 2	LBA LBS	Ø4 x 60 Ø5 x 70	15	**20,7**	**24,3**	γ_{M0}				
TCN240	full pattern	LBA LBS	Ø4 x 60 Ø5 x 70	36	**24,1**	**26,9**	γ_{M0}	M16	2	0,5	-
	pattern 2	LBA LBS	Ø4 x 60 Ø5 x 70	18	**23,9**	**29,1**	γ_{M0}				

The group of 2 anchors must be verified for: $V_{Sd,y} = 2 \times k_{t\perp} \times F_{4,d}$

		TIMBER				STEEL		CONCRETE			
F_5		fastening holes Ø5 type	Ø x L [mm]	n_V [pcs]	$R_{5,k\ timber}$ [kN]	$R_{5,k\ steel}$ [kN]	γ_{steel}	fastening holes Ø [mm]	n_H [pcs]	IN(1) $k_{t\perp}$	IN(1) $k_{t//}$
TCN200	full pattern	LBA LBS	Ø4 x 60 Ø5 x 70	30	**6,6**	**2,7**	γ_{M0}	M12	2	0,5	0,47
	pattern 2	LBA LBS	Ø4 x 60 Ø5 x 70	15	**3,6**	**1,6**	γ_{M0}			0,5	0,83
TCN240	full pattern	LBA LBS	Ø4 x 60 Ø5 x 70	36	**8,0**	**3,3**	γ_{M0}	M16	2	0,5	0,48
	pattern 2	LBA LBS	Ø4 x 60 Ø5 x 70	18	**4,3**	**1,9**	γ_{M0}			0,5	0,83

The group of 2 anchors must be verified for: $V_{Sd,y} = 2 \times k_{t\perp} \times F_{5,d}$; $N_{Sd,z} = 2 \times k_{t//} \times F_{5,d}$

		TIMBER				STEEL		CONCRETE			
$F_{4/5}$ TWO ANGLE BRACKETS		fastening holes Ø5 type	Ø x L [mm]	n_V [pcs]	$R_{4/5,k\ timber}$ [kN]	$R_{4/5,k\ steel}$ [kN]	γ_{steel}	fastening holes Ø [mm]	n_H [pcs]	IN(1) $k_{t\perp}$	IN(1) $k_{t//}$
TCN200	full pattern	LBA LBS	Ø4 x 60 Ø5 x 70	30 + 30	**25,6**	**14,9**	γ_{M0}	M12	2 + 2	0,41	0,09
	pattern 2	LBA LBS	Ø4 x 60 Ø5 x 70	15 + 15	**22,4**	**20,9**	γ_{M0}			0,46	0,06
TCN240	full pattern	LBA LBS	Ø4 x 60 Ø5 x 70	36 + 36	**27,8**	**24,7**	γ_{M0}	M16	2 + 2	0,43	0,06
	pattern 2	LBA LBS	Ø4 x 60 Ø5 x 70	18 + 18	**25,2**	**30,6**	γ_{M0}			0,48	0,04

The group of 2 anchors must be verified for: $V_{Sd,y} = 2 \times k_{t\perp} \times F_{4/5,d}$; $N_{Sd,z} = 2 \times k_{t//} \times F_{4/5,d}$

NOTES

(1) Installation of the anchors in the two internal holes (IN).

- The F_4, F_5, $F_{4/5}$ values in the table are valid for the calculation eccentricity e=0 (timber elements prevented from rotating).

For the GENERAL PRINCIPLES of calculation, see page 230.

STRUCTURAL VALUES | **TCN200 + TCW200** | TIMBER-TO-CONCRETE | $F_{2/3}$

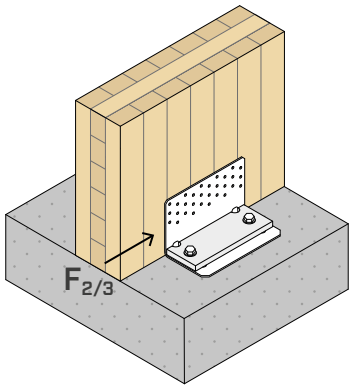

TIMBER STRENGTH

configuration on timber	fastening holes Ø5			$R_{2/3,k\ timber}$	$K_{2/3,ser}$
	type	Ø x L [mm]	n_V [pcs]	[kN]	[N/mm]
TCN200 + TCW200	LBA	Ø4 x 60	30	**56,7**	**9000**
	LBS	Ø5 x 50		**66,4**	

CONCRETE STRENGTH

Strength values of some of the possible fastening solutions on concrete for anchors installed in internal holes (IN) with WASHER.

configuration on concrete	fastening holes Ø13			$R_{2/3,d\ concrete}$		
	type	Ø x L [mm]	n_H [pcs]	IN[(1)] [kN]	$e_{y,IN}$ [mm]	$e_{z,IN}$ [mm]
uncracked	VIN-FIX 5.8	M12 x 140	2	**27,4**	**38,5**	**83.5**
	HYB-FIX 8.8	M12 x 195		**41,5**		
	SKR	12 x 110		**15,4**		
	AB1	M12 x 120		**26,1**		
cracked	VIN-FIX 5.8	M12 x 140		**21,1**		
	HYB-FIX 8.8	M12 x 195		**41,8**		
	AB1	M12 x 120		**17,3**		
seismic	HYB-FIX 8.8	M12 x 195		**14,0**		
	EPO-FIX 8.8	M12 x 195		**17,2**		

ANCHORS INSTALLATION PARAMETERS

installation	anchor type		t_{fix}	h_{ef}	h_{nom}	h_1	d_0	h_{min}
	type	Ø x L [mm]	[mm]	[mm]	[mm]	[mm]	[mm]	[mm]
TCN200 + TCW200	VIN-FIX 5.8	M12 x 140	15	111	111	120	14	200
	HYB-FIX 8.8	M12 x 195	15	166	166	175	14	
	EPO-FIX 8.8	M12 x 195	15	166	166	175	14	
	SKR	12 x 110	15	64	95	115	10	
	AB1	M12 x 120	15	70	80	85	12	

t_{fix} fastened plate thickness
h_{nom} nominal anchoring depth
h_{ef} effective anchoring depth
h_1 minimum hole depth
d_0 hole diameter in the concrete support
h_{min} concrete minimum thickness

Precut INA threaded rod, with nut and washer: see page 562.
MGS threaded rod class 8.8 to be cut to size: see page 174.

NOTES

(1) Installation of the anchors in the two internal holes (IN).
For the GENERAL PRINCIPLES of calculation, see page 230.
For the anchors verification refer to page 230.

STRUCTURAL VALUES | **TCN240 + TCW240** | TIMBER-TO-CONCRETE | $F_{2/3}$

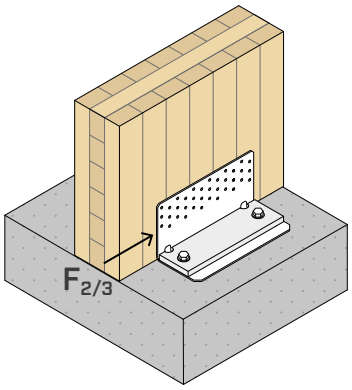

TIMBER STRENGTH

configuration on timber	fastening holes Ø5			$R_{2/3,k\ timber}$	$K_{2/3,ser}$
	type	Ø x L [mm]	n_V [pcs]	[kN]	[N/mm]
TCN240 + TCW240	LBA	Ø4 x 60	36	**70,5**	**9000**
	LBS	Ø5 x 50		**82.6**	

CONCRETE STRENGTH

Strength values of some of the possible fastening solutions on concrete for anchors installed in internal holes (IN) with WASHER.

configuration on concrete	fastening holes Ø17			$R_{2/3,d\ concrete}$		
	type	Ø x L [mm]	n_H [pcs]	IN[1] [kN]	$e_{y,IN}$ [mm]	$e_{z,IN}$ [mm]
uncracked	VIN-FIX 5.8	M16 x 195	2	**57,5**	**39,5**	**83.5**
	HYB-FIX 8.8	M16 x 195		**80,4**		
	SKR	16 x 130		**31,4**		
	AB1	M16 x 145		**42,4**		
cracked	VIN-FIX 5.8	M16 x 195		**32,2**		
	HYB-FIX 8.8	M16 x 245		**80,4**		
	AB1	M16 x 145		**30,3**		
seismic	HYB-FIX 8.8	M16 x 245		**23,9**		
	EPO-FIX 8.8	M16 x 245		**30,4**		

ANCHORS INSTALLATION PARAMETERS

installation	anchor type		t_{fix}	h_{ef}	h_{nom}	h_1	d_0	h_{min}
	type	Ø x L [mm]	[mm]	[mm]	[mm]	[mm]	[mm]	[mm]
TCN240 + TCW240	VIN-FIX 5.8	M16 x 195	15	160	160	165	18	200
	HYB-FIX 8.8	M16 x 195	15	160	160	165	18	200
		M16 x 245	15	210	210	215	18	250
	EPO-FIX 8.8	M16 x 245	15	210	210	215	18	250
	SKR	16 x 130	15	85	115	145	14	200
	AB1	M16 x 145	15	85	97	105	16	200

t_{fix} fastened plate thickness
h_{nom} nominal anchoring depth
h_{ef} effective anchoring depth
h_1 minimum hole depth
d_0 hole diameter in the concrete support
h_{min} concrete minimum thickness

Precut INA threaded rod, with nut and washer: see page 562.
MGS threaded rod class 8.8 to be cut to size: see page 174.

NOTES

[1] Installation of the anchors in the two internal holes (IN).
For the GENERAL PRINCIPLES of calculation, see page 230.

For the anchors verification refer to page 230.

STRUCTURAL VALUES | **TCN200 + TCW200** | TIMBER-TO-CONCRETE | F_1

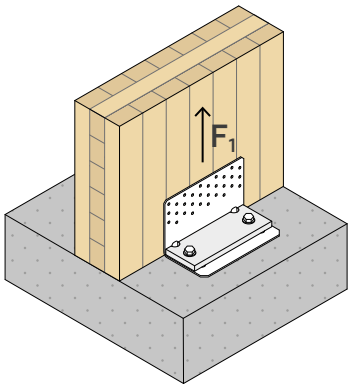

TIMBER STRENGTH

configuration on timber	TIMBER				STEEL	
	fastening holes Ø5			$R_{1,k\ timber}$	$R_{1,k\ steel}$	
	type	Ø x L [mm]	n_V [pcs]	[kN]	[kN]	γ_{steel}
TCN200 + TCW200	LBA	Ø4 x 60	30	**79,8**	**45,7**	γ_{M0}
	LBS	Ø5 x 50		**68,1**		

CONCRETE STRENGTH

Strength values of some of the possible fastening solutions on concrete for anchors installed in internal holes (IN) with WASHER.

configuration on concrete	fastening holes Ø13			$R_{1,d\ concrete}$	
	type	Ø x L [mm]	n_H [pcs]	IN[(1)] [kN]	$k_{t//}$
uncracked	VIN-FIX 5.8/8.8	M12 x 195	2	**21,8**	**1,09**
	HYB-FIX 8.8	M12 x 195		**40,8**	
cracked	HYB-FIX 5.8/8.8	M12 x 195		**23,0**	
	HYB-FIX 8.8	M12 x 245		**30,6**	
seismic	EPO-FIX 8.8	M12 x 195		**14,0**	
	EPO-FIX 8.8	M12 x 245		**18,5**	

ANCHORS INSTALLATION PARAMETERS

installation	anchor type		t_{fix}	h_{ef}	h_{nom}	h_1	d_0	h_{min}
	type	Ø x L [mm]	[mm]	[mm]	[mm]	[mm]	[mm]	[mm]
TCN200 + TCW200	VIN-FIX 5.8/8.8 HYB-FIX 5.8/8.8 EPO-FIX 8.8	M12 x 195	15	160	160	165	14	200
	HYB-FIX 8.8 EPO-FIX 8.8	M12 x 245	15	210	210	215	14	250

t_{fix} fastened plate thickness
h_{nom} nominal anchoring depth
h_{ef} effective anchoring depth
h_1 minimum hole depth
d_0 hole diameter in the concrete support
h_{min} concrete minimum thickness

Precut INA threaded rod, with nut and washer: see page 562.
MGS threaded rod class 8.8 to be cut to size: see page 174.

NOTES

(1) Installation of the anchors in the two internal holes (IN).

For the GENERAL PRINCIPLES of calculation, see page 230.
For the anchors verification refer to page 230.

STRUCTURAL VALUES | **TCN240 + TCW240** | TIMBER-TO-CONCRETE | F_1

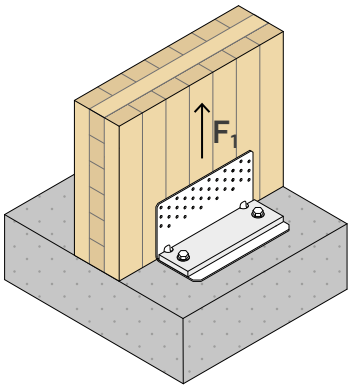

TIMBER STRENGTH

configuration on timber	TIMBER				STEEL	
	fastening holes Ø5			$R_{1,k\ timber}$	$R_{1,k\ steel}$	
	type	Ø x L [mm]	n_V [pcs]	[kN]	[kN]	γ_{steel}
TCN240+TCW240	LBA	Ø4 x 60	36	**95,8**	**69,8**	γ_{M0}
	LBS	Ø5 x 50		**81,7**		

CONCRETE STRENGTH

Strength values of some of the possible fastening solutions on concrete for anchors installed in internal holes (IN) with WASHER.

configuration on concrete	fastening holes Ø17			$R_{1,d\ concrete}$	
	type	Ø x L [mm]	n_H [pcs]	IN(1) [kN]	$k_{t//}$
uncracked	VIN-FIX 5.8/8.8	M16 x 195	2	**27,4**	**1,08**
	HYB-FIX 5.8/8.8	M16 x 195		**45,7**	
cracked	HYB-FIX 5.8/8.8	M16 x 195		**31,2**	
	HYB-FIX 5.8/8.8	M16 x 245		**42,2**	
seismic	HYB-FIX 8.8	M16 x 330		**21,1**	
	EPO-FIX 8.8	M16 x 245		**19,8**	
	EPO-FIX 8.8	M16 x 330		**28,1**	

ANCHORS INSTALLATION PARAMETERS

installation	anchor type		t_{fix}	h_{ef}	h_{nom}	h_1	d_0	h_{min}
	type	Ø x L [mm]	[mm]	[mm]	[mm]	[mm]	[mm]	[mm]
TCN240 + TCW240	VIN-FIX 5.8/8.8	M16 x 195	15	160	160	165	18	200
	HYB-FIX 5.8/8.8	M16 x 195	15	160	160	165	18	200
		M16 x 245	15	210	210	215	18	250
		M16 x 330	15	295	295	300	18	350
	EPO-FIX 8.8	M16 x 245	15	210	210	215	18	250
		M16 x 330	15	295	295	300	18	350

t_{fix} fastened plate thickness
h_{nom} nominal anchoring depth
h_{ef} effective anchoring depth
h_1 minimum hole depth
d_0 hole diameter in the concrete support
h_{min} concrete minimum thickness

Precut INA threaded rod, with nut and washer: see page 562.
MGS threaded rod class 8.8 to be cut to size: see page 174.

NOTES

(1) Installation of the anchors in the two internal holes (IN).

For the GENERAL PRINCIPLES of calculation, see page 230.

For the anchors verification refer to page 230.

STRUCTURAL VALUES | **TTN240** | TIMBER-TO-TIMBER | $F_{2/3}$

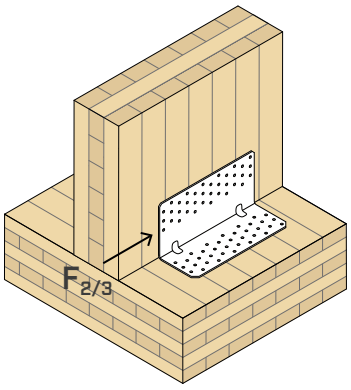

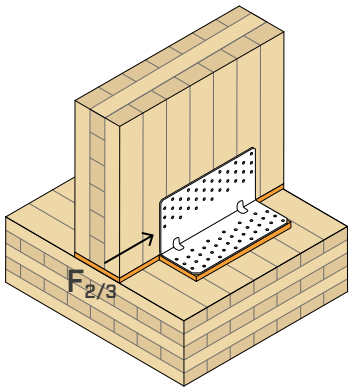

TIMBER STRENGTH

configuration on timber	fastening holes Ø5 type	Ø x L [mm]	n_V [pcs]	n_H [pcs]	profile s [mm]	$R_{2/3,k\ timber}$ [kN]	$K_{2/3,ser}$ [N/mm]
TTN240	LBA	Ø4 x 60	36	36	-	**51,3**	**11000**
	LBS	Ø5 x 70				**58,0**	
TTN240 + XYLOFON	LBA	Ø4 x 60	36	36	6	**41,7**	**9000**
	LBS	Ø5 x 70				**43,8**	

STRUCTURAL VALUES | **TTN240** | TIMBER-TO-TIMBER | F_1

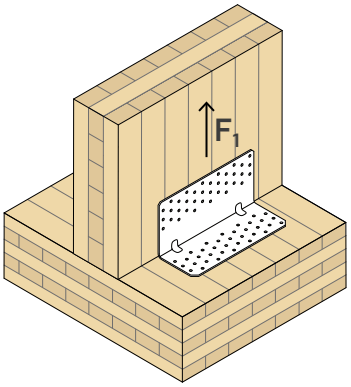

TIMBER STRENGTH

configuration on timber	fastening holes Ø5 type	Ø x L [mm]	n_V [pcs]	n_H [pcs]	$R_{1,k\ timber}$ [kN]
TTN240	LBA	Ø4 x 60	36	36	**7,4**
	LBS	Ø5 x 70			**16,2**

NOTES

For the GENERAL PRINCIPLES of calculation, see page 230.

STRUCTURAL VALUES | **TTN240** | TIMBER-TO-CONCRETE | F_4 | F_5 | $F_{4/5}$

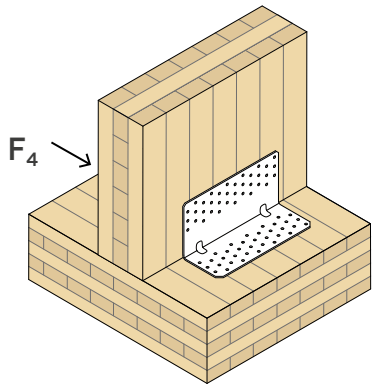

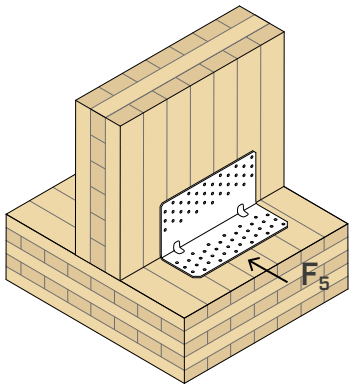

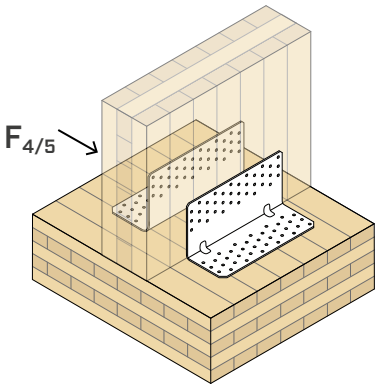

F_4		TIMBER				STEEL	
		fastening holes Ø5			$R_{4,k\ timber}$	$R_{4,k\ steel}$	
		type	Ø x L [mm]	n_V [pcs]	[kN]	[kN]	γ_{steel}
TTN240	full pattern	LBA LBS	Ø4 x 60 Ø5 x 70	36 + 36	**23,8**	**31,1**	γ_{M0}

F_5		TIMBER				STEEL	
		fastening holes Ø5			$R_{5,k\ timber}$	$R_{5,k\ steel}$	
		type	Ø x L [mm]	n_V [pcs]	[kN]	[kN]	γ_{steel}
TTN240	full pattern	LBA LBS	Ø4 x 60 Ø5 x 70	36 + 36	**7,3**	**3,4**	γ_{M0}

$F_{4/5}$ TWO ANGLE BRACKETS		TIMBER				STEEL	
		fastening holes Ø5			$R_{4/5,k\ timber}$	$R_{4/5,k\ steel}$	
		type	Ø x L [mm]	n_V [pcs]	[kN]	[kN]	γ_{steel}
TTN240	full pattern	LBA LBS	Ø4 x 60 Ø5 x 70	72 + 72	**26,7**	**31,6**	γ_{M0}

NOTES

- The F_4, F_5, $F_{4/5}$ values in the table are valid for the calculation eccentricity e=0 (timber elements prevented from rotating).

For the GENERAL PRINCIPLES of calculation, see page 230.

ANCHORS VERIFICATION FOR STRESS LOADING $F_{2/3}$

Fastening elements to the concrete through anchors shall be verified according to the load acting on the anchor, which can be evaluated through the tabulated geometric parameters (e).
ey calculation eccentricities vary depending on the type of installation selected: 2 internal anchors (IN) or 2 external anchors (OUT).

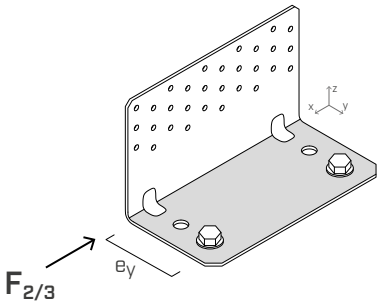

The anchor group must be verified for:

$V_{Sd,x} = F_{2/3,d}$
$M_{Sd,z} = F_{2/3,d} \cdot e_{y,IN/OUT}$

ANCHORS VERIFICATION FOR STRESS LOADING $F_{2/3}$ WITH WASHER

Fastening elements to the concrete through anchors shall be verified according to the load acting on the anchor, which can be evaluated through the tabulated geometric parameters (e).
The calculation eccentricities e_y and e_z refer to installation with WASHER TCW of 2 internal anchors (IN).

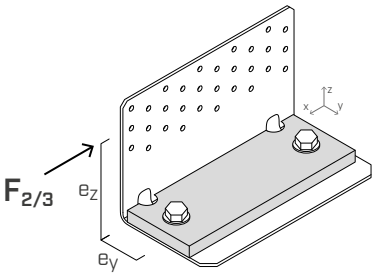

The anchor group must be verified for:

$V_{Sd,x} = F_{2/3,d}$
$M_{Sd,z} = F_{2/3,d} \cdot e_{y,IN}$
$M_{Sd,y} = F_{2/3,d} \cdot e_{z,IN}$

ANCHORS VERIFICATION FOR STRESS LOADING F_1 WITH WASHER

Fastening elements to the concrete through anchors shall be verified according to the load acting on the anchor, which can be evaluated through the tabulated geometric parameters (k_t).
2 internal anchors (IN) must be provided for installation on concrete with WASHER TCW.

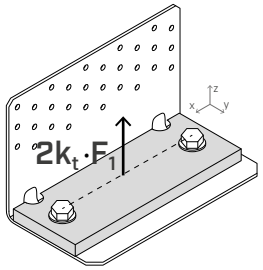

The anchor group must be verified for:

$N_{Sd,z} = 2 \times k_{t//} \cdot F_{1,d}$

GENERAL PRINCIPLES

- Characteristic values comply with the EN 1995:2014 standard in accordance with ETA-11/0496.
- Design values can be obtained from characteristic values as follows:

$$R_d = min \begin{cases} \frac{R_{k,\,timber} \cdot k_{mod}}{\gamma_M} \\ \frac{R_{k,\,steel}}{\gamma_{M0}} \\ R_{d,\,concrete} \end{cases}$$

  The coefficients k_{mod}, γ_M and γ_{M0} should be taken according to the current regulations used for the calculation.
- Dimensioning and verification of timber and concrete elements must be carried out separately. Verify that there are no brittle failures before reaching the connection strength.
- Structural elements in timber, to which the connection devices are fastened, must be prevented from rotating.
- A timber density of ρ_k = 350 kg/m^3 was considered for the calculation process. For higher ρ_k values, the strength on timber side can be converted by the k_{dens} value:

$$k_{dens} = \left(\frac{\rho_k}{350}\right)^{0,5} \quad for\ 350\ kg/m^3 \le \rho_k \le 420\ kg/m^3$$

$$k_{dens} = \left(\frac{\rho_k}{350}\right)^{0,5} \quad for\ LVL\ with\ \rho_k \le 500\ kg/m^3$$

- In the calculation phase, a strength class of C25/30 concrete with thin reinforcement was considered, in the absence of spacing and distances from the edge and minimum thickness indicated in the tables listing the installation parameters of the anchors used. The strength values are valid for the calculation hypothesis defined in the table; for boundary conditions different from the ones in the table (e.g. minimum distances from the edge or different concrete thickness), the concrete-side anchors can be verified using MyProject calculation software according to the design requirements.
- Seismic design in performance category C2, without ductility requirements on anchors (option a2) and elastic design according to EN 1992:2018. For chemical anchors subjected to shear stress it is assumed that the annular space between the anchor and the plate hole is filled (α_{gap}=1).
- The product ETAs for the anchors used in the concrete-side strength calculation are indicated below:
  - VIN-FIX chemical anchor according to ETA-20/0363;
  - HYB-FIX chemical anchor according to ETA-20/1285;
  - EPO-FIX chemical anchor according to ETA-23/0419;
  - SKR screw-in anchor according to ETA-24/0024;
  - AB1 mechanical anchor according to ETA-17/0481 (M12);
  - AB1 mechanical anchor according to ETA-99/0010 (M16).

UK CONSTRUCTION PRODUCT EVALUATION

- UKTA-0836-22/6373.

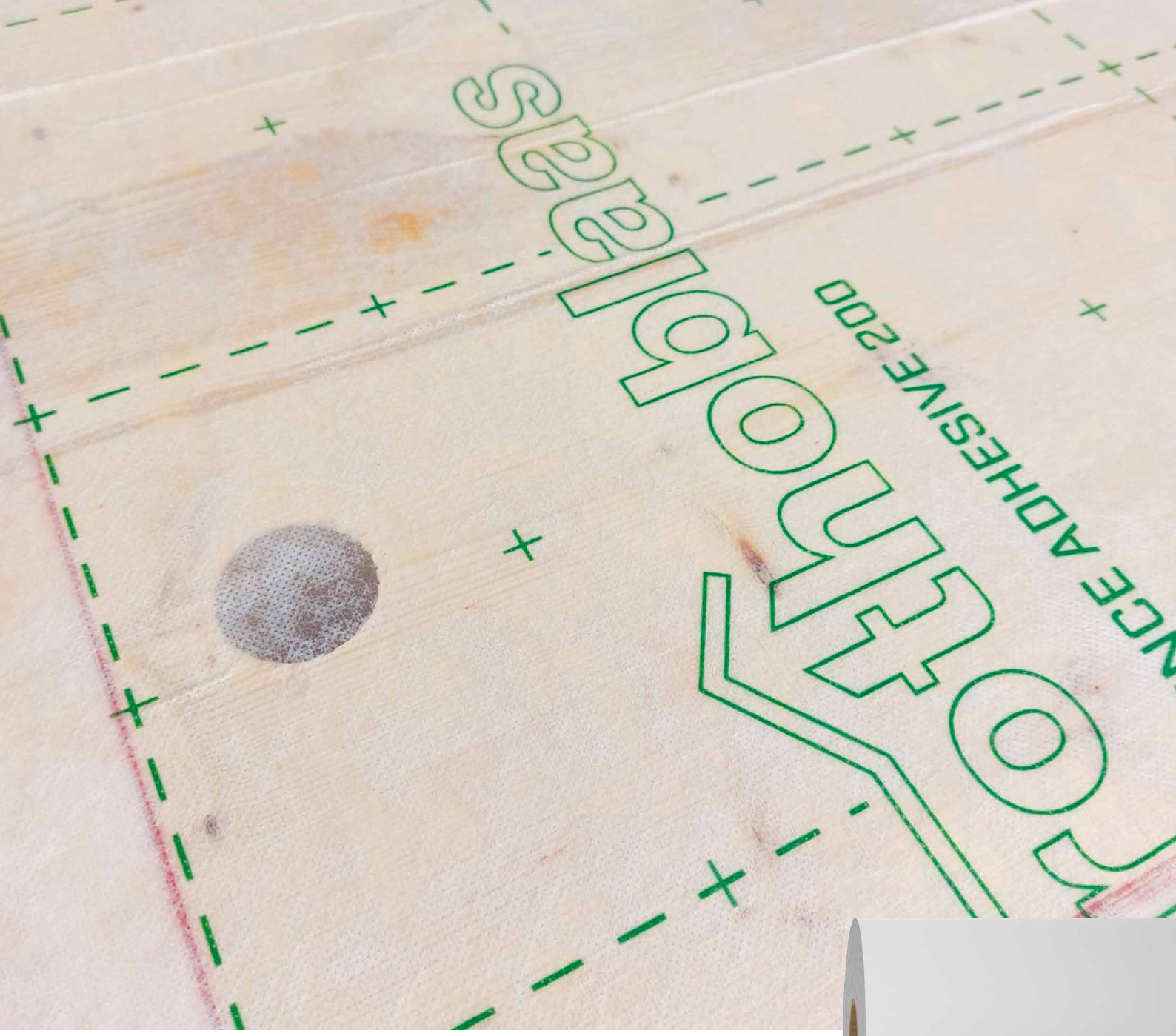

Transparent, self-adhesive, protective

DEFENCE ADHESIVE 200 is the self-adhesive membrane that protects timber building elements. Extremely transparent and durable, it provides 12-week protection against water, rubbing and dust.

It can be repositioned and reapplied in the event of an error, making the work of professionals who install it off-site or on site easier.

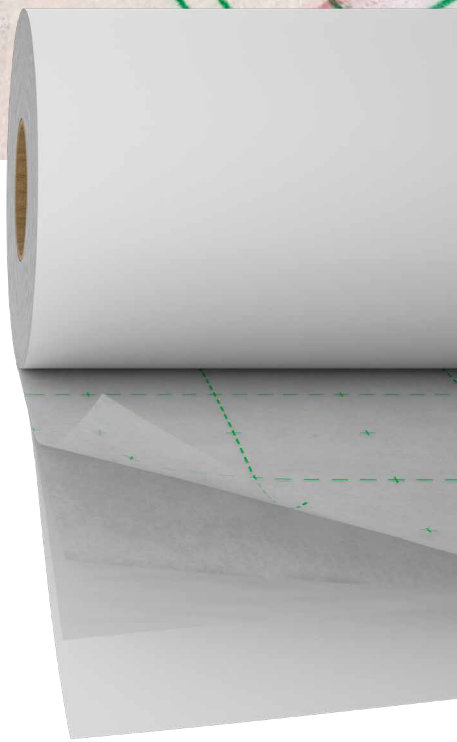

Choose efficient and reliable solutions, choose self-adhesive membranes from Rothoblaas:

rothoblaas.com

rothoblaas

Solutions for Building Technology

TITAN S

ANGLE BRACKET FOR SHEAR AND TENSILE FORCES

HOLES FOR HBS PLATE
Fastening with HBS PLATE Ø8 screws using a screwdriver makes installation easy and fast and allows you to work safely and comfortably. The angle bracket can be easily disassembled by removing the screws.

85 kN SHEAR
Exceptional shear strengths. Up to 85,9 kN on concrete (with TCW washer). Up to 60,0 kN on timber.

75 kN TENSILE
On concrete, the TCS angle bracket with TCW washer provides excellent tensile strength. $R_{1,k}$ up to 75,9 kN characteristic values.

USA, Canada and more design values available online.

CE
ETA-11/0496

SERVICE CLASS SC1 SC2

MATERIAL

DX51D Z275 **TITAN S:** DX51D + Z275 carbon steel.

S235 Fe/Zn12c **TITAN WASHER:** S235 + Fe/Zn12c carbon steel

EXTERNAL LOADS

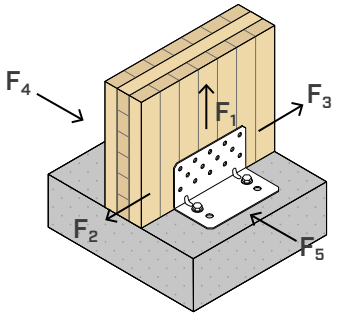

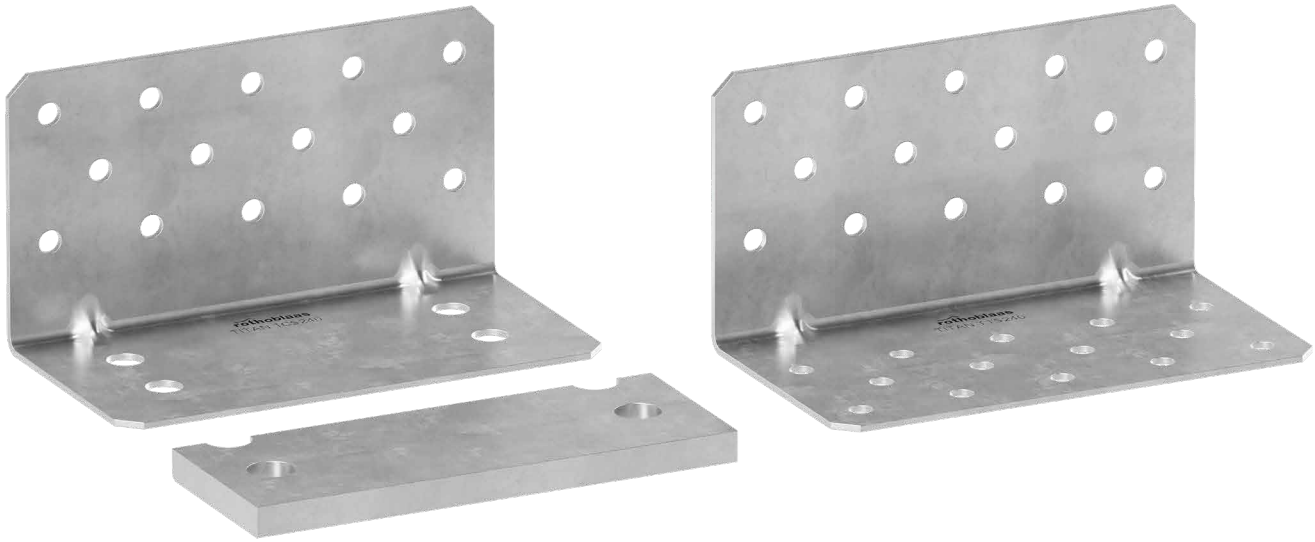

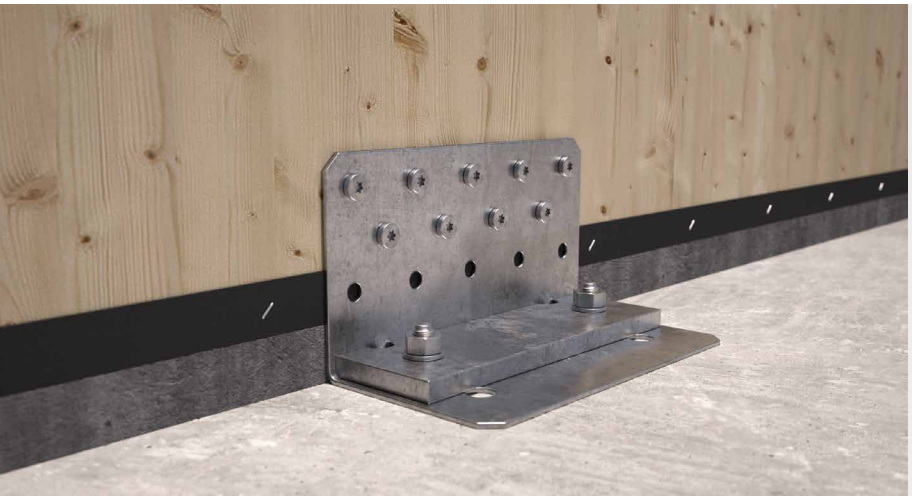

FIELDS OF USE

Shear and tension joints for timber walls. Suitable for walls subject to high stress. Timber-to-timber, timber-to-concrete and timber-to-steel configurations.

Can be applied to:
- solid timber and glulam
- CLT and LVL panels





EASY INSTALLATION

The angle brackets fastening using a reduced number of HBS PLATE Ø8 screws makes installation faster and easier.

ALL DIRECTIONS

Exceptional strength values in all directions allow use even in special or non-standard situations.

CODES AND DIMENSIONS

TITAN S - TCS | CONCRETE-TO-TIMBER JOINTS

CODE	B [mm] *[in]*	P [mm] *[in]*	H [mm] *[in]*	holes [mm] *[in]*	n_V Ø11 *n_V Ø0.44* [pcs]	s [mm] *[in]*		pcs
TCS240	240 *9 1/2*	123 *4 13/16*	130 *5 1/8*	4 x Ø17 *4 x Ø0.67*	14	3 *0.12*	●	10

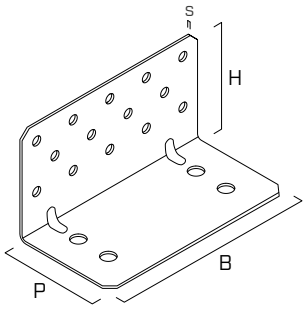

TITAN WASHER - TCW240 | CONCRETE-TO-TIMBER JOINTS

CODE	B [mm] *[in]*	P [mm] *[in]*	s [mm] *[in]*	holes [mm] *[in]*		pcs
TCW240	230 *9 1/16*	73 *2 7/8*	12 *0.47*	Ø18 *Ø0.71*	●	1

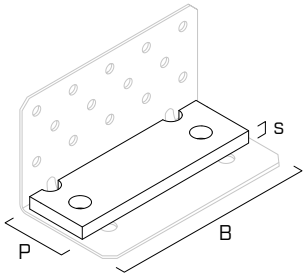

TITAN S - TTS | TIMBER-TO-TIMBER JOINTS

CODE	B [mm] *[in]*	P [mm] *[in]*	H [mm] *[in]*	n_H Ø11 *n_H Ø0.44* [pcs]	n_V Ø11 *n_V Ø0.44* [pcs]	s [mm] *[in]*		pcs
TTS240	240 *9 1/2*	130 *5 1/8*	130 *5 1/8*	14	14	3 *0.12*	●	10

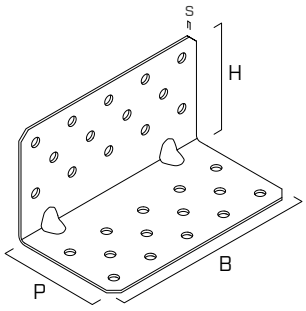

ACOUSTIC PROFILE | TIMBER-TO-TIMBER JOINTS

CODE	type	B [mm] *[in]*	P [mm] *[in]*	s [mm] *[in]*		pcs
XYL35120240	XYLOFON PLATE	240 *9 1/2*	120 *4 3/4*	6 *0.24*	●	10

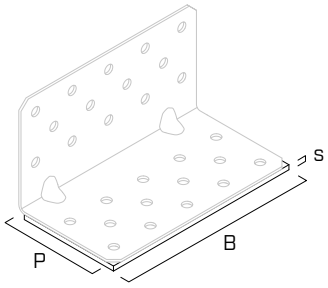

FASTENERS

type	description		d [mm]	support	page
HBS PLATE	pan head screw		8		573
HBS PLATE EVO	C4 EVO pan head screw		8		573
AB1	CE1 expansion anchor		16		536
SKR	screw-in anchor		16		528
VIN-FIX	vinyl ester chemical anchor		M16		545
HYB-FIX	hybrid chemical anchor		M16		552
EPO-FIX	epoxy chemical anchor		M16		557

GEOMETRY

TCS240

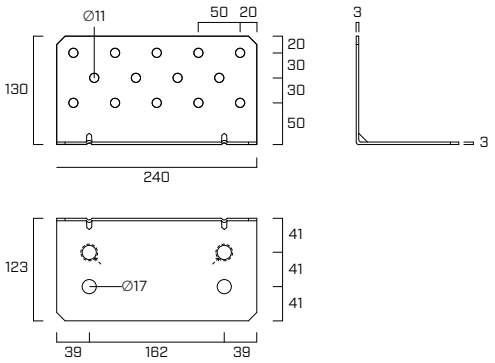

TCW240

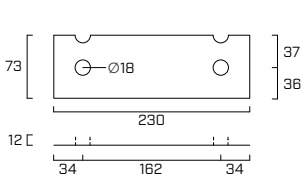

TTS240

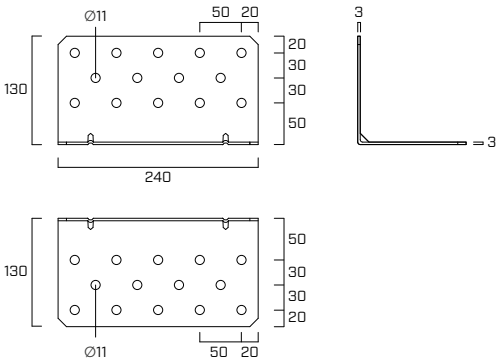

INSTALLATION ON CONCRETE

To fix **TITAN TCS** angle bracket to the concrete foundation, **2 anchors** must be used, according to one of the following installation configurations, according to the acting stress.

ideal installation

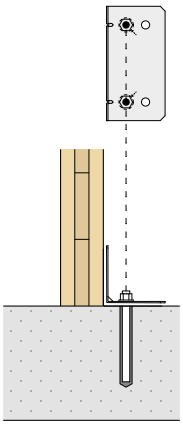

2 anchors positioned in the INTERNAL HOLES (**IN**) (identified by a mark on the product)

$e=e_{y,IN}$

reduced stress on the anchor (minimum e_y and k_t eccentricity)

optimized connection strength

alternative installation

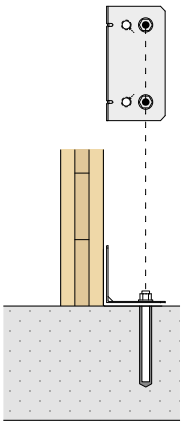

2 anchors placed in the EXTERNAL HOLES (**OUT**) (e.g. in case of clash between the anchor and the concrete support reinforcement)

$e=e_{y,OUT}$

maximum stress on the anchor (maximum e_y and k_t eccentricity)

reduced connection strength

installation with washer

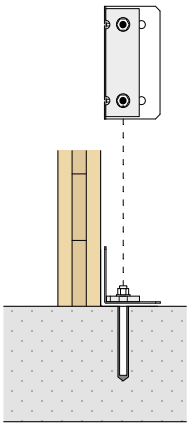

The WASHER TCW must be fastened by means of 2 anchors positioned in the INTERNAL HOLES (**IN**)

$e=e_{y,IN}$

TCS240 | PARTIAL FASTENING PATTERNS

In the presence of design requirements such as stresses of different value or the presence of an intermediate H_B layer (levelling grout, sill or ground) between the wall and the supporting surface, a partial fastening pattern can be adopted.

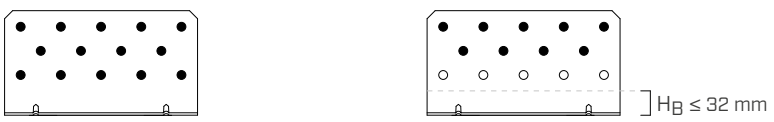

full pattern

partial pattern

STRUCTURAL VALUES | **TCS240** | TIMBER-TO-CONCRETE | $F_{2/3}$

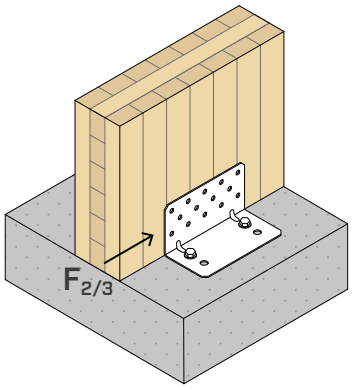

TIMBER STRENGTH

configuration on timber	fastening holes Ø11			$R_{2/3,k\ timber}$	$K_{2/3,ser}$
	type	Ø x L [mm]	n_V [pcs]	[kN]	[N/mm]
full pattern	HBS PLATE	Ø8 x 80	14	**70,3**	**8200**
partial pattern	HBS PLATE	Ø8 x 80	9	**36,1**	**7000**

CONCRETE STRENGTH

Strength values of some of the possible fastening solutions for anchors installed in the internal (IN) or external (OUT) holes.

configuration on concrete	fastening holes Ø17			$R_{2/3,d\ concrete}$			
	type	Ø x L [mm]	n_H [pcs]	IN(1) [kN]	OUT(2) [kN]	$e_{y,IN}$ [mm]	$e_{y,OUT}$ [mm]
uncracked	VIN-FIX 5.8	M16 x 160	2	**67,2**	**52,9**	**39,5**	**80,5**
	VIN-FIX 8.8	M16 x 160		**90.1**	**70,9**		
	SKR	16 x 130		**65,0**	**51,2**		
	AB1	M16 x 145		**79,0**	**62,4**		
cracked	VIN-FIX 5.8/8.8	M16 x 160		**55,0**	**43.2**		
	SKR	16 x 130		**45,3**	**35,7**		
	AB1	M16 x 145		**67,0**	**53,1**		
seismic	HYB-FIX 8.8	M16 x 195		**35,2**	**27,7**		
	EPO-FIX 8.8	M16 x 195		**47,1**	**37,2**		

ANCHORS INSTALLATION PARAMETERS

installation	anchor type		t_{fix}	h_{ef}	h_{nom}	h_1	d_0	h_{min}
	type	Ø x L [mm]	[mm]	[mm]	[mm]	[mm]	[mm]	[mm]
TCS240	VIN-FIX 5.8 /8.8	M16 x 160	3	134	134	140	18	200
	HYB-FIX 8.8	M16 x 195	3	164	164	170	18	
	EPO-FIX 8.8	M16 x 195	3	164	164	170	18	
	SKR	16 x 130	3	85	127	150	14	
	AB1	M16 x 145	3	85	97	105	16	

t_{fix} fastened plate thickness
h_{nom} nominal anchoring depth
h_{ef} effective anchoring depth
h_1 minimum hole depth
d_0 hole diameter in the concrete support
h_{min} concrete minimum thickness

Precut INA threaded rod, with nut and washer: see page 562.
MGS threaded rod class 8.8 to be cut to size: see page 174.

NOTES

(1) Installation of the anchors in the two internal holes (IN).

(2) Installation of the anchors in external holes (OUT).

For the GENERAL PRINCIPLES of calculation, see page 241.

For the anchors verification refer to page 241.

STRUCTURAL VALUES | **TCS240** | TIMBER-TO-CONCRETE | F_4 | F_5 | $F_{4/5}$

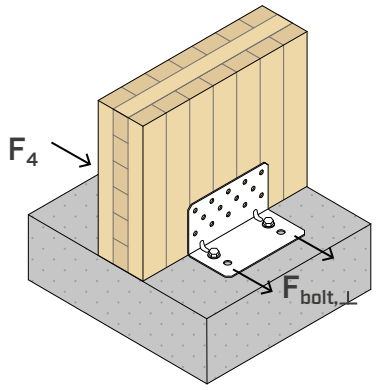

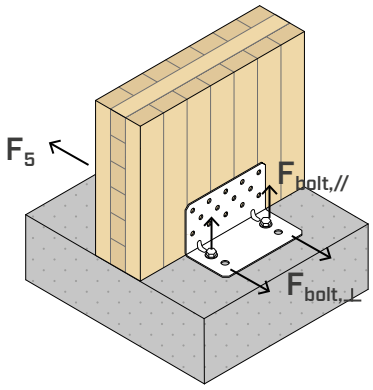

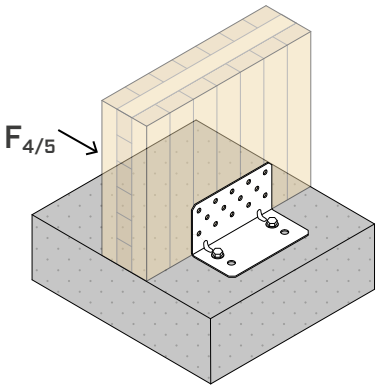

	TIMBER				STEEL		CONCRETE			
	fastening holes Ø11			$R_{4,k\ timber}$	$R_{4,k\ steel}$		fastening holes		IN[1]	
F_4	type	Ø x L	n_V				Ø	n_H	$k_{t\perp}$	$k_{t//}$
		[mm]	[pcs]	[kN]	[kN]	γ_{steel}	[mm]	[pcs]		
TCS240	HBS PLATE	Ø8 x 80	14	**21,1**	**18,1**	γ_{M0}	M16	2	0,5	-

The group of 2 anchors must be verified for: $V_{Sd,y} = 2 \times k_{t\perp} \times F_{4,d}$

	TIMBER				STEEL		CONCRETE			
	fastening holes Ø11			$R_{5,k\ timber}$	$R_{5,k\ steel}$		fastening holes		IN[1]	
F_5	type	Ø x L	n_V				Ø	n_H	$k_{t\perp}$	$k_{t//}$
		[mm]	[pcs]	[kN]	[kN]	γ_{steel}	[mm]	[pcs]		
TCS240	HBS PLATE	Ø8 x 80	14	**17,1**	**4,3**	γ_{M0}	M16	2	0,5	0,36

The group of 2 anchors must be verified for: $V_{Sd,y} = 2 \times k_{t\perp} \times F_{5,d}$; $N_{Sd,z} = 2 \times k_{t//} \times F_{5,d}$

	TIMBER				STEEL		CONCRETE			
$F_{4/5}$	fastening holes Ø11			$R_{4/5,k\ timber}$	$R_{4/5,k\ steel}$		fastening holes		IN[1]	
TWO ANGLE BRACKETS	type	Ø x L	n_V				Ø	n_H	$k_{t\perp}$	$k_{t//}$
		[mm]	[pcs]	[kN]	[kN]	γ_{steel}	[mm]	[pcs]		
TCS240	HBS PLATE	Ø8 x 80	14 + 14	**27,4**	**18,8**	γ_{M0}	M16	2 + 2	0,39	0,08

The group of 2 anchors must be verified for: $V_{Sd,y} = 2 \times k_{t\perp} \times F_{4/5,d}$; $N_{Sd,z} = 2 \times k_{t//} \times F_{4/5,d}$

NOTES

- The F_4, F_5, $F_{4/5}$ values in the table are valid for the calculation eccentricity e=0 (timber elements prevented from rotating).

[1] Installation of the anchors in the two internal holes (IN).

For the GENERAL PRINCIPLES of calculation, see page 241.

STRUCTURAL VALUES | **TCS240 + TCN240** | TIMBER-TO-CONCRETE | $F_{2/3}$

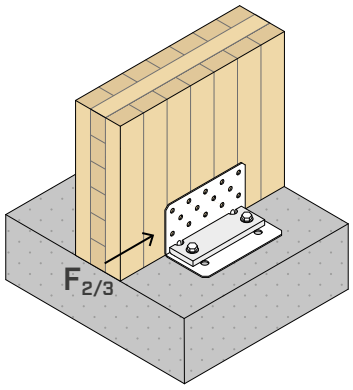

TIMBER STRENGTH

configuration on timber	fastening holes Ø11			$R_{2/3,k\ timber}$	$K_{2/3,ser}$
	type	Ø x L [mm]	n_V [pcs]	[kN]	[N/mm]
TCS240 + TCW240	HBS PLATE	Ø8 x 80	14	**85.9**	**9000**

CONCRETE STRENGTH

Strength values of some of the possible fastening solutions on concrete for anchors installed in internal holes (IN) with WASHER.

configuration on concrete	fastening holes Ø17			$R_{2/3,d\ concrete}$		
	type	Ø x L [mm]	n_H [pcs]	IN[(1)] [kN]	$e_{y,IN}$ [mm]	$e_{z,IN}$ [mm]
uncracked	VIN-FIX 8.8	M16 x 195	2	**60,9**	**39,5**	**78,5**
	HYB-FIX 8.8	M16 x 195		**81,4**		
	SKR	16 x 130		**32,7**		
	AB1	M16 x 145		**42,5**		
cracked	VIN-FIX 5.8/8.8	M16 x 195		**33,6**		
	HYB-FIX 8.8	M16 x 195		**72,0**		
	AB1	M16 x 145		**30,3**		
seismic	HYB-FIX 8.8	M16 x 245		**24,7**		
	EPO-FIX 8.8	M16 x 245		**31,2**		

ANCHORS INSTALLATION PARAMETERS

installation	anchor type		t_{fix}	h_{ef}	h_{nom}	h_1	d_0	h_{min}
	type	Ø x L [mm]	[mm]	[mm]	[mm]	[mm]	[mm]	[mm]
TCS240 + TCW240	VIN-FIX 5.8/8.8	M16 x 195	15	160	160	165	18	200
	HYB-FIX 8.8	M16 x 195	15	160	160	165	18	200
		M16 x 245	15	210	210	215	18	250
	EPO-FIX 8.8	M16 x 245	15	210	210	215	18	250
	SKR	16 x 130	15	85	115	145	14	200
	AB1	M16 x 145	15	85	97	105	16	200

t_{fix} fastened plate thickness
h_{nom} nominal anchoring depth
h_{ef} effective anchoring depth
h_1 minimum hole depth
d_0 hole diameter in the concrete support
h_{min} concrete minimum thickness

Precut INA threaded rod, with nut and washer: see page 562.
MGS threaded rod class 8.8 to be cut to size: see page 174.

NOTES

(1) Installation of the anchors in the two internal holes (IN).

For the GENERAL PRINCIPLES of calculation, see page 241.

For the anchors verification refer to page 241.

STRUCTURAL VALUES | **TCS240 + TCW240** | TIMBER-TO-CONCRETE | F_1

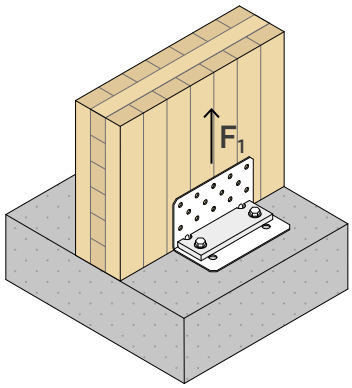

TIMBER STRENGTH

configuration on timber		TIMBER				STEEL		
		fastening holes Ø11			$R_{1,k\ timber}$	$R_{1,k\ steel}$		K_{ser}
		type	Ø x L [mm]	n_V [pcs]	[kN]	[kN]	γ_{steel}	[N/mm]
TCS240 + TCW240	full pattern	HBS PLATE	Ø8 x 80	14	-(3)	**75,9**	γ_{M0}	**11500**
	partial pattern(1)	HBS PLATE	Ø8 x 80	9	**33,9**	**75,9**		-

CONCRETE STRENGTH

Strength values of some of the possible fastening solutions on concrete for anchors installed in internal holes (IN) with WASHER.

configuration on concrete	fastening holes Ø17			$R_{1,d\ concrete}$	
	type	Ø x L [mm]	n_H [pcs]	IN(2) [kN]	$k_{t//}$
uncracked	VIN-FIX 5.8/8.8	M16 x 195		**27,4**	
	HYB-FIX 5.8/8.8	M16 x 195		**45,7**	
cracked	VIN-FIX 5.8/8.8	M16 x 195		**15,3**	
	HYB-FIX 5.8/8.8	M16 x 195		**31,2**	
	HYB-FIX 5.8/8.8	M16 x 245	2	**42,2**	**1,08**
seismic	HYB-FIX 8.8	M16 x 245		**14,9**	
		M16 x 330		**21,1**	
	EPO-FIX 8.8	M16 x 245		**19,8**	
		M16 x 330		**28,1**	

ANCHORS INSTALLATION PARAMETERS

installation	anchor type		t_{fix}	h_{ef}	h_{nom}	h_1	d_0	h_{min}
	type	Ø x L [mm]	[mm]	[mm]	[mm]	[mm]	[mm]	[mm]
TCS240 + TCW240	VIN-FIX 5.8/8.8	M16 x 195	15	160	160	165	18	200
	HYB-FIX 5.8/8.8	M16 x 195	15	160	160	165	18	200
		M16 x 245	15	210	210	215	18	250
		M16 x 330	15	295	295	300	18	350
	EPO-FIX 8.8	M16 x 245	15	210	210	215	18	250
		M16 x 330	15	295	295	300	18	350

t_{fix} fastened plate thickness
h_{nom} nominal anchoring depth
h_{ef} effective anchoring depth
h_1 minimum hole depth
d_0 hole diameter in the concrete support
h_{min} concrete minimum thickness

Precut INA threaded rod, with nut and washer: see page 562.
MGS threaded rod class 8.8 to be cut to size: see page 174.

NOTES

(1) In case of design requirements such as F_1 stress of different value or presence of an H_B intermediate layer between the wall and the supporting surface, partial fastening with $H_B \leq 32$ mm can be adopted for application on CLT panel.

(2) Installation of the anchors in the two internal holes (IN).

(3) The experimental failure mode is steel-side, so no timber-side failure is considered.

For the GENERAL PRINCIPLES of calculation, see page 241.
For the anchors verification refer to page 241.

STRUCTURAL VALUES | **TTS240** | TIMBER-TO-TIMBER | $F_{2/3}$

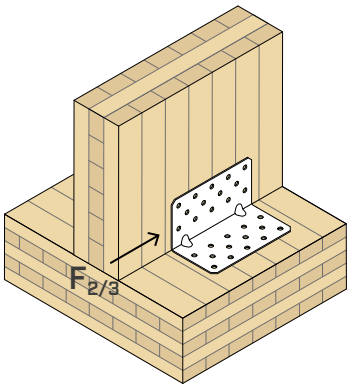

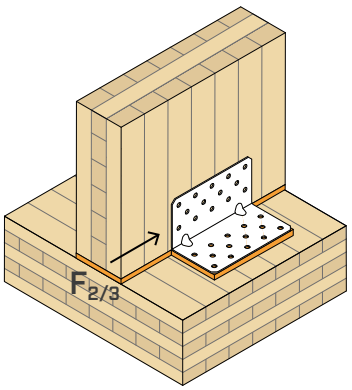

TIMBER STRENGTH

configuration on timber	fastening holes Ø11 type	Ø x L [mm]	n_V [pcs]	n_H [pcs]	profile s [mm]	$R_{2/3,k\ timber}$ [kN]	$K_{2/3,ser}$ [N/mm]
TTS240	HBS PLATE	Ø8 x 80	14	14	-	**60,0**	**5600**
TTS240 + XYLOFON	HBS PLATE	Ø8 x 80	14	14	6	**35,7**	**6000**

STRUCTURAL VALUES | **TTS240** | TIMBER-TO-TIMBER | F_4 | F_5 | $F_{4/5}$

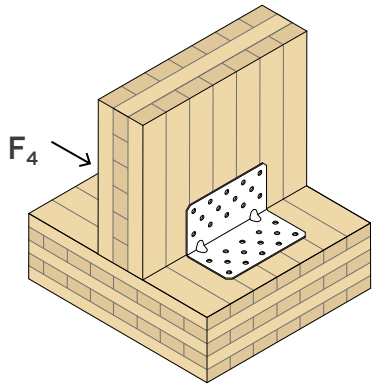

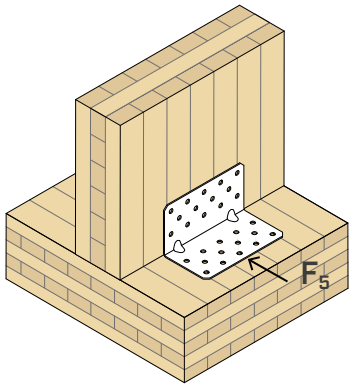

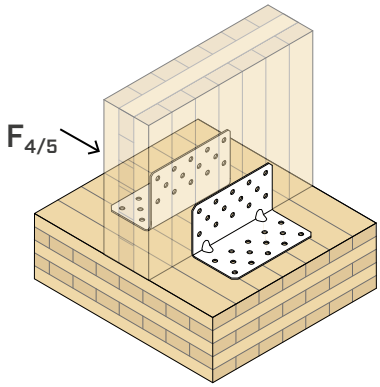

	TIMBER				STEEL	
F_4	fastening holes Ø11 type	Ø x L [mm]	n [pcs]	$R_{4,k\ timber}$ [kN]	$R_{4,k\ steel}$ [kN]	γ_{steel}
TTS240	HBS PLATE	Ø8 x 80	14 + 14	**20,7**	**20,9**	γ_{M0}

	TIMBER				STEEL	
F_5	fastening holes Ø11 type	Ø x L [mm]	n [pcs]	$R_{5,k\ timber}$ [kN]	$R_{5,k\ steel}$ [kN]	γ_{steel}
TTS240	HBS PLATE	Ø8 x 80	14 + 14	**16,8**	**4,2**	γ_{M0}

	TIMBER				STEEL	
$F_{4/5}$ TWO ANGLE BRACKETS	fastening holes Ø11 type	Ø x L [mm]	n_V [pcs]	$R_{4/5,k\ timber}$ [kN]	$R_{4/5,k\ steel}$ [kN]	γ_{steel}
TTS240	HBS PLATE	Ø8 x 80	28 + 28	**25,2**	**23,4**	γ_{M0}

NOTES

- The F_4, F_5, $F_{4/5}$ values in the table are valid for the calculation eccentricity e=0 (timber elements prevented from rotating).

For the GENERAL PRINCIPLES of calculation, see page 241.

TCW240 | ANCHORS VERIFICATION FOR STRESS LOADING $F_{2/3}$ WITH WASHER

Fastening elements to the concrete through anchors shall be verified according to the load acting on the anchor, which can be evaluated through the tabulated geometric parameters (e).
The calculation eccentricities e_y and e_z refer to installation with WASHER TCW of 2 internal anchors (IN).

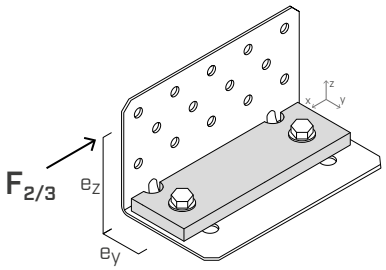

The anchor group must be verified for:

$V_{Sd,x} = F_{2/3,d}$
$M_{Sd,z} = F_{2/3,d} \cdot e_{y,IN}$
$M_{Sd,y} = F_{2/3,d} \cdot e_{z,IN}$

TCS240 | ANCHORS VERIFICATION FOR STRESS LOADING $F_{2/3}$

Fastening elements to the concrete through anchors shall be verified according to the load acting on the anchor, which can be evaluated through the tabulated geometric parameters (e).
ey calculation eccentricities vary depending on the type of installation selected: 2 internal anchors (IN) or 2 external anchors (OUT).

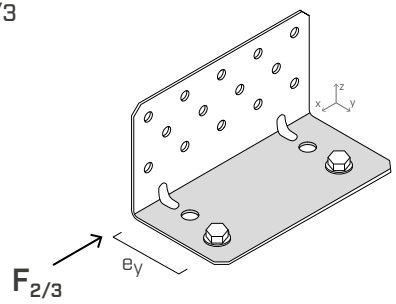

The anchor group must be verified for:

$V_{Sd,x} = F_{2/3,d}$
$M_{Sd,z} = F_{2/3,d} \cdot e_{y,IN/OUT}$

TCS240 - TCW240 | ANCHORS VERIFICATION FOR STRESS LOADING F_1 WITH WASHER

Fastening elements to the concrete through anchors shall be verified according to the load acting on the anchor, which can be evaluated through the tabulated geometric parameters (k_t).
2 internal anchors (IN) must be provided for installation on concrete with WASHER TCW.

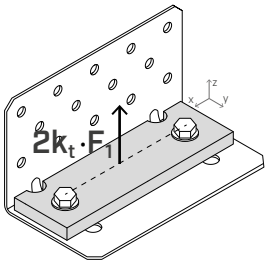

The anchor group must be verified for:

$N_{Sd,z} = 2 \times k_{t//} \cdot F_{1,d}$

GENERAL PRINCIPLES

- Characteristic values comply with the EN 1995:2014 standard in accordance with ETA-11/0496.
- Design values can be obtained from characteristic values as follows:

$$R_d = min \begin{cases} \frac{R_{k,\,timber} \cdot k_{mod}}{\gamma_M} \\ \frac{R_{k,\,steel}}{\gamma_{M0}} \\ R_{d,\,concrete} \end{cases}$$

  The coefficients k_{mod}, γ_M and γ_{M0} should be taken according to the current regulations used for the calculation.
- Dimensioning and verification of timber and concrete elements must be carried out separately. Verify that there are no brittle failures before reaching the connection strength.
- Structural elements in timber, to which the connection devices are fastened, must be prevented from rotating.
- A timber density of ρ_k = 350 kg/m^3 was considered for the calculation process. For higher ρ_k values, the strength on timber side can be converted by the k_{dens} value:

$$k_{dens} = \left(\frac{\rho_k}{350}\right)^{0,5} \quad for\ 350\ kg/m^3 \leq \rho_k \leq 420\ kg/m^3$$

$$k_{dens} = \left(\frac{\rho_k}{350}\right)^{0,5} \quad for\ LVL\ with\ \rho_k \leq 500\ kg/m^3$$

- In the calculation phase, a strength class of C25/30 concrete with thin reinforcement was considered, in the absence of spacing and distances from the edge and minimum thickness indicated in the tables listing the installation parameters of the anchors used. The strength values are valid for the calculation hypothesis defined in the table; for boundary conditions different from the ones in the table (e.g. minimum distances from the edge or different concrete thickness), the concrete-side anchors can be verified using MyProject calculation software according to the design requirements.
- Seismic design in performance category C2, without ductility requirements on anchors (option a2) and elastic design according to EN 1992:2018. For chemical anchors subjected to shear stress it is assumed that the annular space between the anchor and the plate hole is filled (α_{gap}=1).
- The product ETAs for the anchors used in the concrete-side strength calculation are indicated below:
  - VIN-FIX chemical anchor according to ETA-20/0363;
  - HYB-FIX chemical anchor according to ETA-20/1285;
  - EPO-FIX chemical anchor according to ETA-23/0419;
  - SKR screw-in anchor according to ETA-24/0024;
  - AB1 mechanical anchor according to ETA-99/0010 (M16).

UK CONSTRUCTION PRODUCT EVALUATION

- UKTA-0836-22/6373.

TITAN F

ANGLE BRACKET FOR SHEAR LOADS

DESIGN REGISTERED

ETA-11/0496

LOW HOLES

Ideal for TIMBER FRAME, designed for fastening on platform beams or on the studs of the frame structures. It also has certified values for use with partial nailing.

TIMBER FRAME

Thanks to the lowered position of the holes on the vertical flange, it offers excellent shear strength values even on low height platform beams (38 mm | 2''). $R_{2,k}$ up to 51.8 kN on concrete and 55.1 kN on timber.

HOLES FOR CONCRETE

The TITAN angle bracket are designed to offer two fastening possibilities, in order to avoid interference with the rods in the concrete support.

USA, Canada and more design values available online.

SERVICE CLASS SC1 SC2

MATERIAL

DX51D Z275 **TITAN F**: DX51D + Z275 carbon steel.

EXTERNAL LOADS

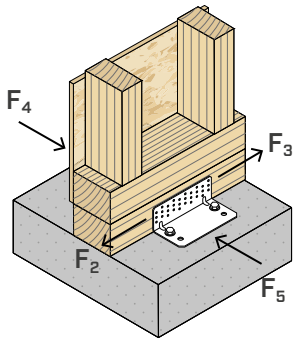



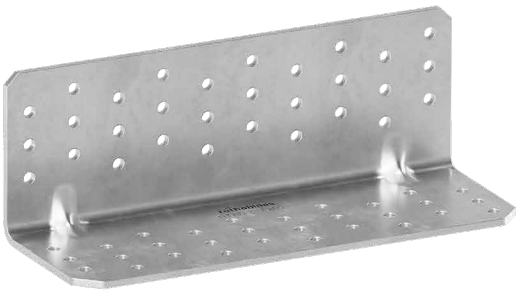



FIELDS OF USE

Shear joints for timber walls.
Optimised for fastening frame walls.
Timber-to-timber, timber-to-concrete and timber-to-steel configurations.

Can be applied to:

- solid timber and glulam
- timber frame
- CLT and LVL panels



TIMBER-TO-TIMBER

Ideal for shear joints between floor and wall and between wall and wall. The high shear strength allows to optimize the number of fastenings.

PARTIAL NAILING

Partial nailing allows installation even with the presence of bedding grout. It can also be used on thin frame walls (38 mm | 2").

CODES AND DIMENSIONS

TITAN F - TCF | CONCRETE-TO-TIMBER JOINTS

CODE	B [mm] [in]	P [mm] [in]	H [mm] [in]	holes [mm] [in]	n_V Ø5 n_V Ø0.20 [pcs]	s [mm] [in]		pcs
TCF200	200 *8*	103 *4 1/16*	71 *2 13/16*	Ø13 *Ø0.52*	30	3 *0.12*	•	10

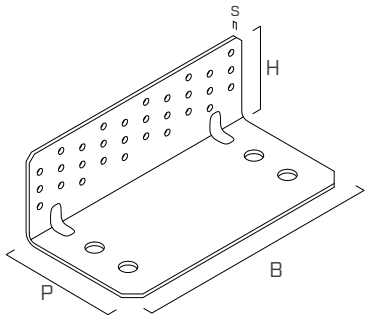

TITAN F - TTF | TIMBER-TO-TIMBER JOINTS

CODE	B [mm] [in]	P [mm] [in]	H [mm] [in]	n_H Ø5 n_H Ø0.20 [pcs]	n_V Ø5 n_V Ø0.20 [pcs]	s [mm] [in]		pcs
TTF200	200 *8*	71 *2 13/16*	71 *2 13/16*	30	30	3 *0.12*	•	10

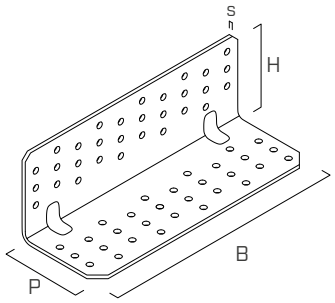

ACOUSTIC PROFILE | TIMBER-TO-TIMBER JOINTS

CODE	type	B [mm] [in]	P [mm] [in]	s [mm] [in]		pcs
XYL3570200	XYLOFON PLATE	200 *8*	70 *2 3/4*	6 *0.24*	•	10

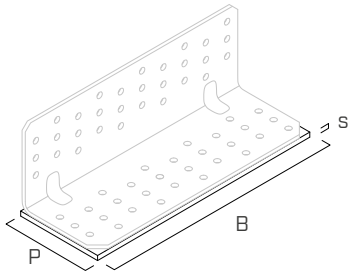

FASTENERS

type	description		d [mm]	support	page
LBA	high bond nail		4		570
LBS	round head screw		5		571
LBS EVO	C4 EVO round head screw		5		571
AB1	CE1 expansion anchor		12		536
SKR	screw-in anchor		12		528
VIN-FIX	vinyl ester chemical anchor		M12		545
HYB-FIX	hybrid chemical anchor		M12		552
EPO-FIX	epoxy chemical anchor		M12		557

GEOMETRY

TCF200

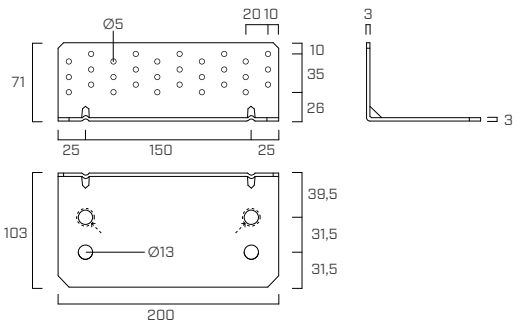

TTF200

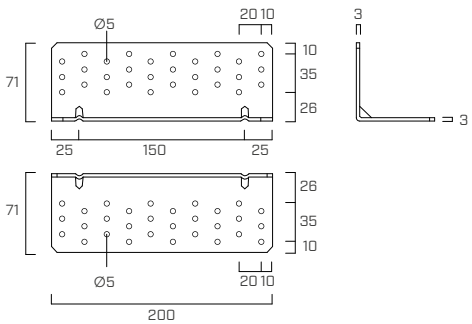

INSTALLATION ON CONCRETE

To fix the **TITAN TCF200** angle bracket to the concrete, **2 anchors** must be used, according to one of the following installation modes:

ideal installation

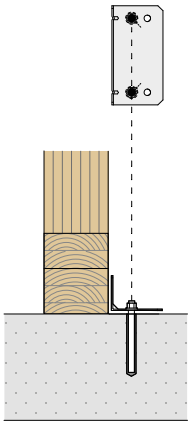

2 anchors positioned in the INTERNAL HOLES (**IN**)
(identified by a mark on the product)

$e=e_{y,IN}$

reduced stress on the anchor
(minimum e_y and k_t eccentricity)

optimized connection strength

alternative installation

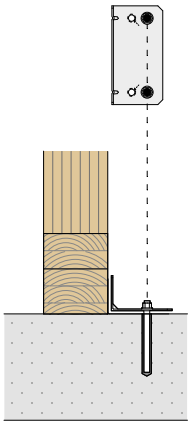

2 anchors placed in the EXTERNAL HOLES (**OUT**)
(e.g. in case of clash between the anchor and the concrete support reinforcement)

$e=e_{y,OUT}$

maximum stress on the anchor
(maximum e_y and k_t eccentricity)

reduced connection strength

FASTENING PATTERNS

In the presence of design requirements such as $F_{2/3}$ stresses of different value or presence of sill or platform beam, it is possible to use partial fastening patterns:

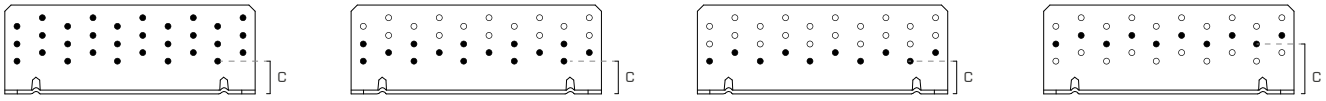

full pattern | **pattern 3** | **pattern 2** | **pattern 1**

configuration	fastening holes Ø5		c	support	
	n_V [pcs]	n_H [pcs]	[mm]		
full pattern	30	30	26	●	●
pattern 3	15	15	26	●	●
pattern 2	10	10	26	●	●
pattern 1	10	10	40	-	●

INSTALLATION

MAXIMUM HEIGHT OF THE INTERMEDIATE H_B LAYER

configuration	fastening holes Ø5		$H_{B\ max}$	$H_{SP\ min}$
	n_V [pcs]	n_H [pcs]	LBA Ø4 - LBS Ø5 [mm]	[mm]
full pattern	30	30	14	80
pattern 3	15	15	14	60
pattern 2	10	10	14	45
pattern 1	10	10	28	60

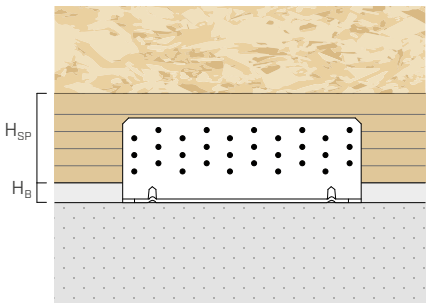

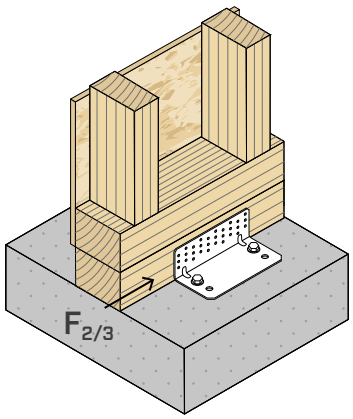

TIMBER STRENGTH

configuration on timber	fastening holes Ø5			$R_{2/3,k\ timber}$	$K_{2/3,ser}$
	type	Ø x L [mm]	n_V [pcs]	[kN]	[N/mm]
full pattern	LBA	Ø4 x 60	30	**48,9**	**9000**
	LBS	Ø5 x 70		**51,8**	
pattern 3	LBA	Ø4 x 60	15	**28,7**	-
	LBS	Ø5 x 70		**27,7**	
pattern 2	LBA	Ø4 x 60	10	**20,8**	**4000**
	LBS	Ø5 x 70		**33,4**	
pattern 1	LBA	Ø4 x 60	10	**17,2**	**3000**
	LBS	Ø5 x 70		**27,5**	

CONCRETE STRENGTH

Strength values of some of the possible fastening solutions for anchors installed in the internal (IN) or external (OUT) holes.

configuration on concrete	fastening holes Ø13			$R_{2/3,d\ concrete}$			
	type	Ø x L [mm]	n_H [pcs]	IN(1) [kN]	OUT(2) [kN]	$e_{y,IN}$ [mm]	$e_{y,OUT}$ [mm]
uncracked	VIN-FIX 5.8	M12 x 140	2	**35,5**	**29,1**	**38,5**	**70**
	VIN-FIX 8.8	M12 x 140		**48,1**	**39,1**		
	SKR	12 x 90		**34,5**	**28,5**		
	AB1	M12 x 100		**35,4**	**28,9**		
cracked	VIN-FIX 5.8	M12 x 140		**35,5**	**29,1**		
	VIN-FIX 8.8	M12 x 140		**39,8**	**32,6**		
	SKR	12 x 90		**24,3**	**20,0**		
	AB1	M12 x 100		**35,4**	**28,9**		
seismic	HYB-FIX 8.8	M12 x 195		**29,0**	**23,8**		
	SKR	12 x 90		**9,0**	**7,3**		
	AB1	M12 x 100		**10,6**	**8,7**		

installation	anchor type		t_{fix}	h_{ef}	h_{nom}	h_1	d_0	h_{min}
	type	Ø x L [mm]	[mm]	[mm]	[mm]	[mm]	[mm]	[mm]
TCF200	VIN-FIX 5.8/8.8 HYB-FIX 8.8	M12 x 140	3	121	121	130	14	200
	HYB-FIX 8.8	M12 x 195	3	176	176	185	14	210
	SKR	12 x 90	3	64	87	110	10	200
	AB1	M12 x 100	3	70	80	85	12	200

t_{fix} fastened plate thickness
h_{nom} nominal anchoring depth
h_{ef} effective anchoring depth
h_1 minimum hole depth
d_0 hole diameter in the concrete support
h_{min} concrete minimum thickness

Precut INA threaded rod, with nut and washer: see page 562.
MGS threaded rod class 8.8 to be cut to size: see page 174.

NOTES

(1) Installation of the anchors in the two internal holes (IN).
(2) Installation of the anchors in external holes (OUT).

For the GENERAL PRINCIPLES of calculation, see page 249.
For the anchors verification refer to page 248.

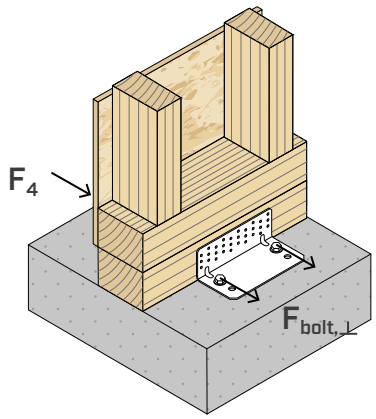

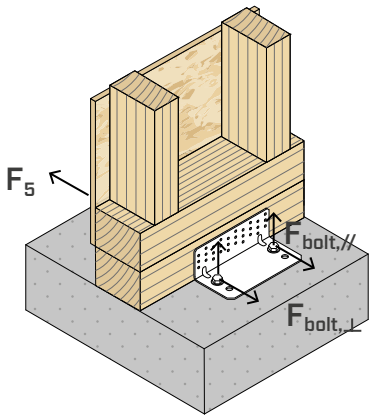

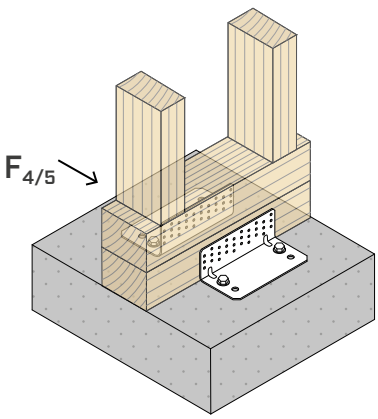

	TIMBER				CONCRETE			
	fastening holes Ø5			$R_{4,k\ timber}$	fastening holes		IN[1]	
F_4	type	Ø x L [mm]	n_V [pcs]	[kN]	Ø [mm]	n_H [pcs]	$k_{t\perp}$	$k_{t//}$
full pattern	LBA LBS	Ø4 x 60 Ø5 x 70	30	**18,6**	M12	2	0,5	-

The group of 2 anchors must be verified for: $V_{Sd,y} = 2 \times k_{t\perp} \times F_{4,d}$

	TIMBER				STEEL		CONCRETE			
	fastening holes Ø5			$R_{5,k\ timber}$	$R_{5,k\ steel}$		fastening holes		IN[1]	
F_5	type	Ø x L [mm]	n_V [pcs]	[kN]	[kN]	γ_{steel}	Ø [mm]	n_H [pcs]	$k_{t\perp}$	$k_{t//}$
full pattern	LBA	Ø4 x 60	30	**6,4**	**9,5**	γ_{M0}	M12	2	0,5	0.27
	LBS	Ø5 x 70		**19,3**						

The group of 2 anchors must be verified for: $V_{Sd,y} = 2 \times k_{t\perp} \times F_{5,d}$ $N_{Sd,z} = 2 \times k_{t//} \times F_{5,d}$

	TIMBER				CONCRETE			
	fastening holes Ø5			$R_{4/5,k\ timber}$	fastening holes		IN[1]	
$F_{4/5}$ TWO ANGLE BRACKETS	type	Ø x L [mm]	n_V [pcs]	[kN]	Ø [mm]	n_H [pcs]	$k_{t\perp}$	$k_{t//}$
full pattern	LBA	Ø4 x 60	30 + 30	**25,0**	M12	2 + 2	0,31	0,10
	LBS	Ø5 x 70		**28,1**				

The group of 2 anchors must be verified for: $V_{Sd,y} = 2 \times k_t \times \perp F_{5,d}$ $N_{Sd,z} = 2 \times k_{t//} \times F_{4/5,d}$

NOTES

- The F_4, F_5, $F_{4/5}$ values in the table are valid for the calculation eccentricity e=0 (timber elements prevented from rotating).

[1] Installation of the anchors in the two internal holes (IN).

For the GENERAL PRINCIPLES of calculation, see page 249.

TCF200 | ANCHORS VERIFICATION FOR STRESS LOADING $F_{2/3}$

Fastening elements to the concrete through anchors shall be verified according to the load acting on the anchor, which can be evaluated through the tabulated geometric parameters (e).

ey calculation eccentricities vary depending on the type of installation selected: 2 internal anchors (IN) or 2 external anchors (OUT).

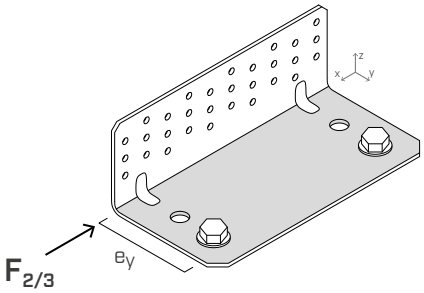

The anchor group must be verified for:

$V_{Sd,x} = F_{2/3,d}$
$M_{Sd,z} = F_{2/3,d} \cdot e_{y,IN/OUT}$

STRUCTURAL VALUES | **TTF200** | TIMBER-TO-TIMBER | $F_{2/3}$

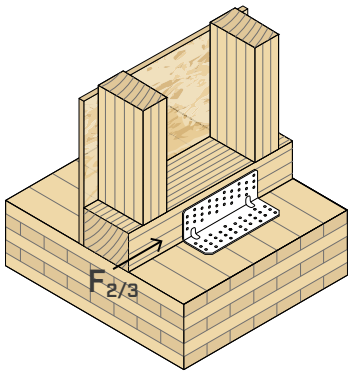

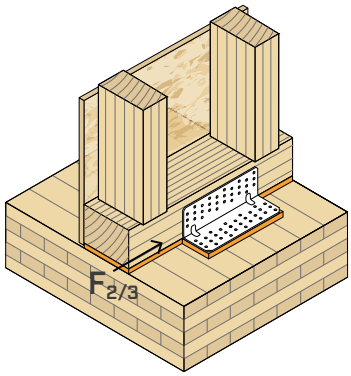

TIMBER STRENGTH

configuration on timber	fastening holes Ø5 type	Ø x L [mm]	n_V [pcs]	n_H [pcs]	$R_{2/3,k\ timber}$ [kN]	$K_{2/3,ser}$ [N/mm]
full pattern	LBA	Ø4 x 60	30	30	**48,9**	**10000**
	LBS	Ø5 x 70			**55,1**	
pattern 3	LBA	Ø4 x 60	15	15	**28,8**	**7000**
	LBS	Ø5 x 70			**36,3**	
pattern 2	LBA	Ø4 x 60	10	10	**20,8**	-
	LBS	Ø5 x 70			**20,0**	

TIMBER-SIDE STRENGTH WITH ACOUSTIC PROFILE

configuration on timber	fastening holes Ø5 type	Ø x L [mm]	n_V [pcs]	n_H [pcs]	$R_{2/3,k\ timber}$ [kN]	$K_{2/3,ser}$ [N/mm]
full pattern + XYLOFON	LBA	Ø4 x 60	30	30	**40,8**	**7000**
	LBS	Ø5 x 70			**45,1**	
pattern 3 + XYLOFON	LBA	Ø4 x 60	15	15	**24,1**	-
	LBS	Ø5 x 70			**28,3**	

NOTES

- The F_4, F_5, $F_{4/5}$ values in the table are valid for the calculation eccentricity e=0 (timber elements prevented from rotating).

For the GENERAL PRINCIPLES of calculation, see page 249.

STRUCTURAL VALUES | **TTF200** | TIMBER-TO-TIMBER | F_4 | F_5 | $F_{4/5}$

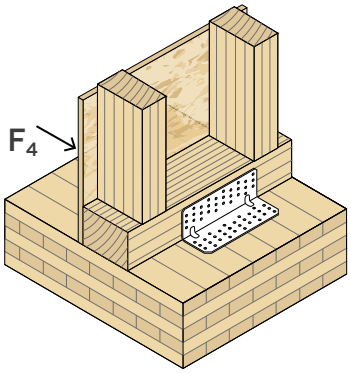

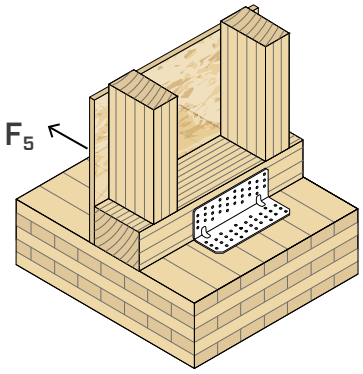

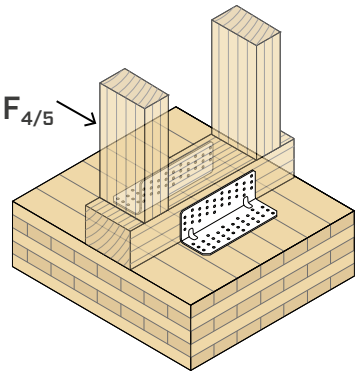

F_4	TIMBER			
	fastening holes Ø5			$R_{4,k\ timber}$
	type	Ø x L [mm]	n [pcs]	[kN]
full pattern	LBA LBS	Ø4 x 60 Ø5 x 70	30+30	**29,7**

F_5	TIMBER				STEEL	
	fastening holes Ø5			$R_{5,k\ timber}$	$R_{5,k\ steel}$	
	type	Ø x L [mm]	n [pcs]	[kN]	[kN]	γ_{steel}
full pattern	LBA	Ø4 x 60	30+30	**6,4**	**9,5**	γ_{M0}
	LBS	Ø5 x 70		**19,3**		

$F_{4/5}$ TWO ANGLE BRACKETS	TIMBER			
	fastening holes Ø5			$R_{4/5,k\ timber}$
	type	Ø x L [mm]	n [pcs]	[kN]
full pattern	LBA	Ø4 x 60	60+60	**36,2**
	LBS	Ø5 x 70		**39,2**

GENERAL PRINCIPLES

- Characteristic values comply with the EN 1995:2014 standard in accordance with ETA-11/0496.
- Design values can be obtained from characteristic values as follows:

$$R_d = min \begin{cases} \frac{R_{k,\ timber} \cdot k_{mod}}{\gamma_M} \\ R_{d,\ concrete} \end{cases}$$

The coefficients k_{mod} and γ_M should be taken according to the current regulations used for the calculation.

- Dimensioning and verification of timber and concrete elements must be carried out separately. Verify that there are no brittle failures before reaching the connection strength.
- Structural elements in timber, to which the connection devices are fastened, must be prevented from rotating.
- A timber density of ρ_k = 350 kg/m^3 was considered for the calculation process. For higher ρ_k values, the strength on timber side can be converted by the k_{dens} value:

$$k_{dens} = \left(\frac{\rho_k}{350}\right)^{0,5} \quad for\ 350\ kg/m^3 \leq \rho_k \leq 420\ kg/m^3$$

$$k_{dens} = \left(\frac{\rho_k}{350}\right)^{0,5} \quad for\ LVL\ with\ \rho_k \leq 500\ kg/m^3$$

- In the calculation phase, a strength class of C25/30 concrete with thin reinforcement was considered, in the absence of spacing and distances from the edge and minimum thickness indicated in the tables listing the installation parameters of the anchors used. The strength values are valid for the calculation hypothesis defined in the table; for boundary conditions different from the ones in the table (e.g. minimum distances from the edge or different concrete thickness), the concrete-side anchors can be verified using MyProject calculation software according to the design requirements.
- Seismic design in performance category C2, without ductility requirements on anchors (option a2) and elastic design according to EN 1992:2018. For chemical anchors subjected to shear stress it is assumed that the annular space between the anchor and the plate hole is filled (α_{gap}=1).
- The product ETAs for the anchors used in the concrete-side strength calculation are indicated below:
  - VIN-FIX chemical anchor according to ETA-20/0363;
  - HYB-FIX chemical anchor according to ETA-20/1285;
  - SKR screw-in anchor according to ETA-24/0024;
  - AB1 mechanical anchor according to ETA-17/0481 (M12).

INTELLECTUAL PROPERTY

- TITAN F angle brackets are protected by the following Registered Community Designs:
  - RCD 002383265-0002;
  - RCD 002383265-0004.

UK CONSTRUCTION PRODUCT EVALUATION

- UKTA-0836-22/6373.

TITAN V

ANGLE BRACKET FOR SHEAR AND TENSILE FORCES

HOLES FOR VGS
Ideal for CLT. The full thread VGS Ø11 inclined screws offer exceptional strength and allow to fasten inter-storey walls of different thickness.

CONCEALED
The reduced height of the vertical flange allows hidden installation of the bracket within the floor panels. Steel thickness: 4 mm.

100 kN TENSILE
On timber, the TTV angle bracket guarantees exceptional tensile strength ($R_{1,k}$ up to 101,0 kN) and shear strength ($R_{2/3,k}$ up to 73,1 kN). Partial fastening possibilities.

USA, Canada and more design values available online.

VIDEO

PATENTED

ETA-11/0496

SERVICE CLASS SC1 SC2

MATERIAL

S275 Fe/Zn12c — S275 + Fe/Zn12c carbon steel

EXTERNAL LOADS

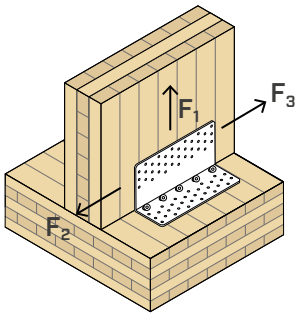

VIDEO
Scan the QR Code and watch the video on our YouTube channel

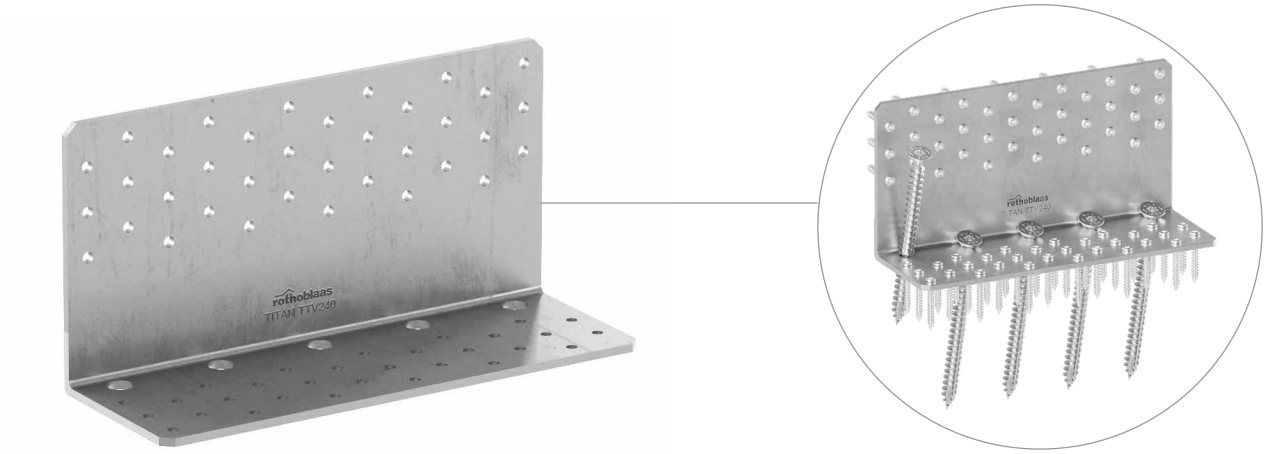

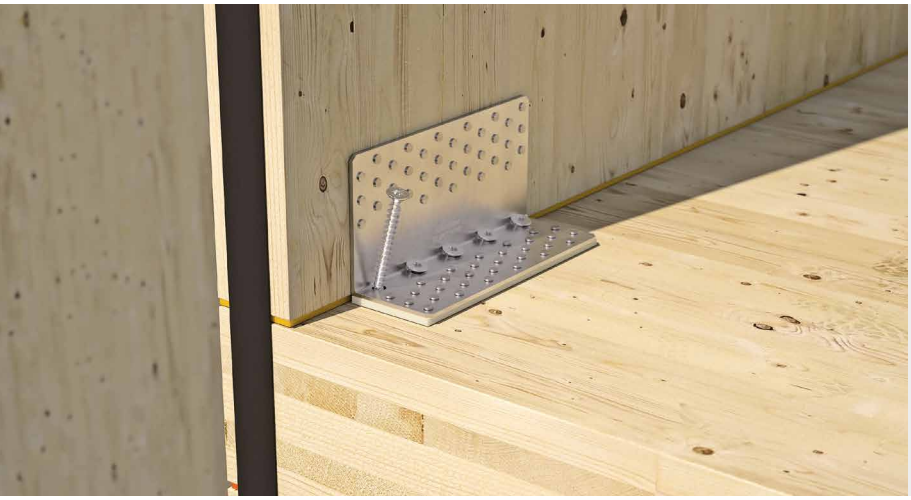

FIELDS OF USE

Shear and tension joints for timber walls.
Suitable for walls subject to very high stress.
Timber-to-timber configuration.

Can be applied to:
- solid timber and glulam
- CLT and LVL panels

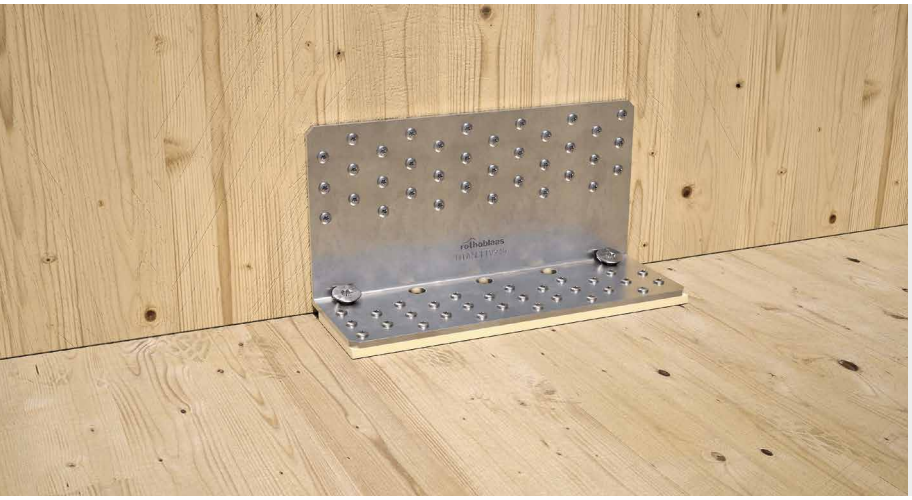

CONCEALED HOLD DOWN

Ideal on timber-to-timber both as a hold down at the ends of the walls and as shear angle bracket along the walls. It can be integrated into the floor panels.

A SINGLE ANGLE BRACKET

Use of a single type of angle bracket for both shear and tensile wall fastening. Optimisation and consistency of fastenings. Possibility of partial fastening with interposed acoustic profiles.

CODES AND DIMENSIONS

TITAN V - TTV | TIMBER-TO-TIMBER JOINTS

CODE	B [mm] *[in]*	P [mm] *[in]*	H [mm] *[in]*	n_V Ø5 n_V Ø0.20 [pcs]	n_H Ø5 n_H Ø0.20 [pcs]	n_H Ø12 n_H Ø0.48 [pcs]	s [mm] *[in]*	pcs
TTV240	240 *9 1/2*	83 *3 1/4*	120 *4 3/4*	36	30	5	4 *0.12*	10

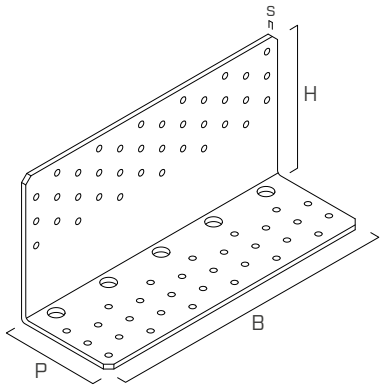

ACOUSTIC PROFILE | TIMBER-TO-TIMBER JOINTS

CODE	type	B [mm] *[in]*	P [mm] *[in]*	s [mm] *[in]*	pcs
XYL3590240	XYLOFON PLATE	240 *9 1/2*	90 *3 1/2*	6 *0.24*	10

FASTENERS

type	description		d [mm]	support	page
LBA	high bond nail		4		570
LBS	round head screw	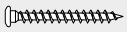	5		571
LBS HARDWOOD	round head screw on hardwoods	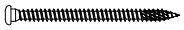	5		572
LBS HARDWOOD EVO	C4 EVO round head screw on hardwoods		5		572
LBS EVO	C4 EVO round head screw	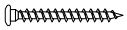	5		571
VGS	full thread connector with countersunk head	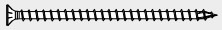	11		575
VGS EVO	C4 EVO full thread connector with countersunk head	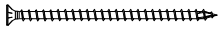	11		576

FASTENING PATTERNS

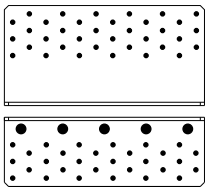

pattern 1

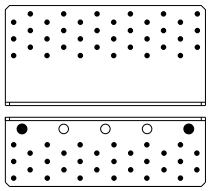

pattern 2

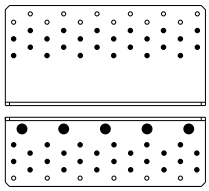

pattern 3

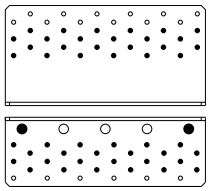

pattern 4

GEOMETRY

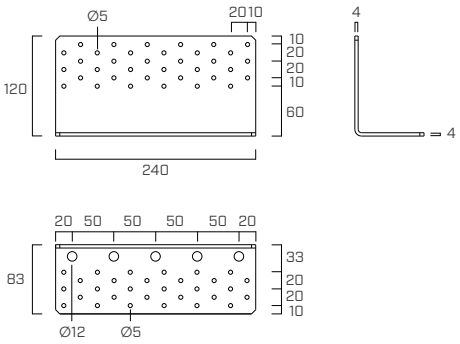

INSTALLATION

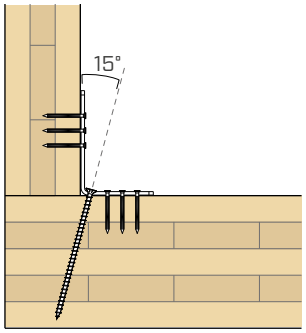

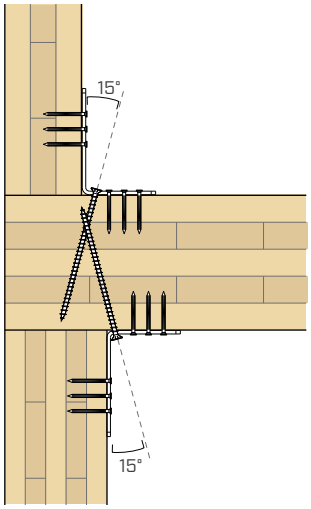

STRUCTURAL VALUES | TIMBER-TO-TIMBER | F_1

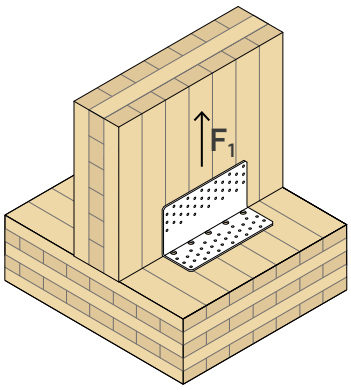

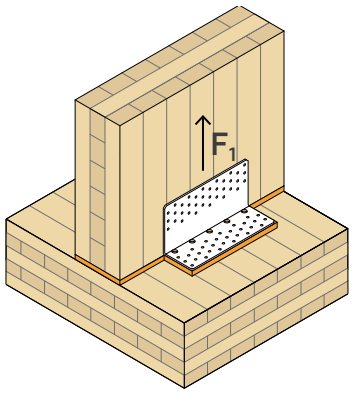

TIMBER STRENGTH

configuration on timber	fastening holes Ø5 type	Ø x L [mm]	n_V [pcs]	n_H [pcs]	fastening holes Ø12 type	$R_{1,k\ timber}$ [kN]	$K_{1,ser}$ [N/mm]
pattern 1	LBA LBS	Ø4 x 60 Ø5 x 70	36	30	5 - VGS Ø11x200	**101,0**	**12500** **-**
pattern 2	LBA LBS	Ø4 x 60 Ø5 x 70	36	30	2 - VGS Ø11x200	**51,8**	**-** **17000**
pattern 3	LBA LBS	Ø4 x 60 Ø5 x 70	24	24	5 - VGS Ø11x150	**64,5**	**10500** **-**
pattern 4	LBA LBS	Ø4 x 60 Ø5 x 70	24	24	2- VGS Ø11x150	**51,3**	**-** **17000**

TIMBER-SIDE STRENGTH WITH ACOUSTIC PROFILE

configuration on timber	fastening holes Ø5 type	Ø x L [mm]	n_V [pcs]	n_H [pcs]	fastening holes Ø12 type	$R_{1,k\ timber}$ [kN]	$K_{1,ser}$ [N/mm]
pattern 1 + XYLOFON	LBA LBS	Ø4 x 60 Ø5 x 70	36	30	5 - VGS Ø11x200	**99,0**	**-**
pattern 2 + XYLOFON	LBA LBS	Ø4 x 60 Ø5 x 70	36	30	2 - VGS Ø11x200	**50,8**	**-** **17000**

GENERAL PRINCIPLES

- Characteristic values comply with the EN 1995:2014 standard in accordance with ETA-11/0496.
- Design values can be obtained from characteristic values as follows:

$$R_{i,d} = R_{i,k\ timber} \cdot \frac{k_{mod}}{\gamma_M}$$

The coefficients k_{mod} and γ_M should be taken according to the current regulations used for the calculation.

- A timber density of ρ_k = 350 kg/m^3 was considered for the calculation process. For higher ρ_k values, the strength on timber side can be converted by the k_{dens} value:

$$k_{dens} = \left(\frac{\rho_k}{350}\right)^{0,5} \quad for\ 350\ kg/m^3 \leq \rho_k \leq 420\ kg/m^3$$

$$k_{dens} = \left(\frac{\rho_k}{350}\right)^{0,5} \quad for\ LVL\ with\ \rho_k \leq 500\ kg/m^3$$

- Dimensioning and verification of the timber elements must be carried out separately. Verify that there are no brittle failures before reaching the connection strength.
- Structural elements in timber, to which the connection devices are fastened, must be prevented from rotating.

STRUCTURAL VALUES | TIMBER-TO-TIMBER | $F_{2/3}$

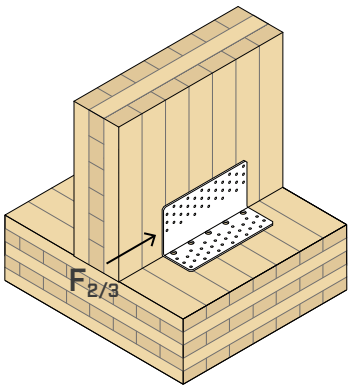

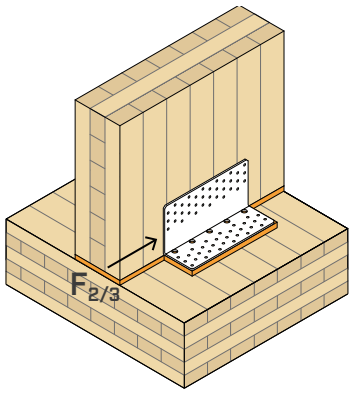

TIMBER STRENGTH

configuration on timber	fastening holes Ø5 type	Ø x L [mm]	n_V [pcs]	n_H [pcs]	fastening holes Ø12 type	$R_{2/3,k\ timber}$ [kN]	$K_{2/3,ser}$ [N/mm]
pattern 1	LBA	Ø4 x 60	36	30	5 - VGS Ø11x200	**68,8**	-
	LBS	Ø5 x 70				**73,1**	**16000**
pattern 2	LBA	Ø4 x 60	36	30	2 - VGS Ø11x200	**59,7**	**6600**
	LBS	Ø5 x 70					-
pattern 3	LBA	Ø4 x 60	24	24	5 - VGS Ø11x150	**61,8**	-
	LBS	Ø5 x 70				**65,8**	**13000**
pattern 4	LBA	Ø4 x 60	24	24	2- VGS Ø11x150	**51,5**	**4800**
	LBS	Ø5 x 70					-

TIMBER-SIDE STRENGTH WITH ACOUSTIC PROFILE

configuration on timber	fastening holes Ø5 type	Ø x L [mm]	n_V [pcs]	n_H [pcs]	fastening holes Ø12 type	$R_{2/3,k\ timber}$ [kN]	$K_{2/3,ser}$ [N/mm]
pattern 1 + XYLOFON	LBA	Ø4 x 60	36	30	5 - VGS Ø11x200	**61,0**	-
	LBS	Ø5 x 70					**10000**
pattern 2 + XYLOFON	LBA	Ø4 x 60	36	30	2 - VGS Ø11x200	**49,4**	**6200**
	LBS	Ø5 x 70					-

GENERAL PRINCIPLES

- Characteristic values comply with the EN 1995:2014 standard in accordance with ETA-11/0496.
- Design values can be obtained from characteristic values as follows:

$$R_{i,d} = R_{i,k\ timber} \cdot \frac{k_{mod}}{\gamma_M}$$

The coefficients k_{mod} and γ_M should be taken according to the current regulations used for the calculation.

- A timber density of ρ_k = 350 kg/m^3 was considered for the calculation process. For higher ρ_k values, the strength on timber side can be converted by the k_{dens} value:

$$k_{dens} = \left(\frac{\rho_k}{350}\right)^{0,5} \quad for\ 350\ kg/m^3 \leq \rho_k \leq 420\ kg/m^3$$

$$k_{dens} = \left(\frac{\rho_k}{350}\right)^{0,5} \quad for\ LVL\ with\ \rho_k \leq 500\ kg/m^3$$

- Dimensioning and verification of the timber elements must be carried out separately. Verify that there are no brittle failures before reaching the connection strength.
- Structural elements in timber, to which the connection devices are fastened, must be prevented from rotating.

INTELLECTUAL PROPERTY

- TITAN V angle brackets are protected by the following patents:
  - EP3.568.535;
  - US10.655.320;
  - CA3.049.483.

UK CONSTRUCTION PRODUCT EVALUATION

- UKTA-0836-22/6373.

EXPERIMENTAL INVESTIGATIONS | TTV240

The TTV240 angle bracket is an innovative connection system that can withstand both tensile and shear loads with high performance.
Thanks to the increased thickness and the use of full threaded screws for the fastening of the floor panel, it has an excellent behaviour in case of **biaxial stress** with different directions.

The experimental campaigns were carried out within an international collaboration with the University of Kassel (Germany), the "Kore" University of Enna (Italy) and CNR-IBE Institute for BioEconomy (Italy).

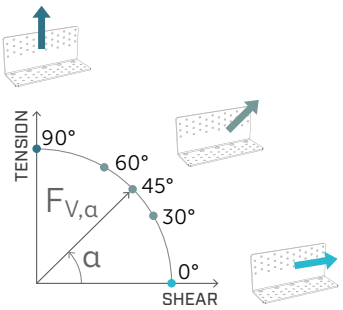

EXPERIMENTAL STRENGTH DOMAIN

In all shear (α=0°), tensile (α=90°) and load inclination (30° ≤ α ≤ 60°) tests, similar collapse modes were achieved, which, due to the lower flange overstrength, are attributable to nail failure in the vertical flange. Also the mechanical parameters for cyclic load behaviour showed a good match ensuring ductile failures in the upper nails.

Using small diameter fasteners, it was possible to achieve comparable strengths independent of the stress load direction. The comparison of the experimental results confirmed the analytical considerations that a **circular strength domain** can be provided.



Samples at the end of cyclic tests: tension (a), shear (b) and 45° (c) (partial fastening).

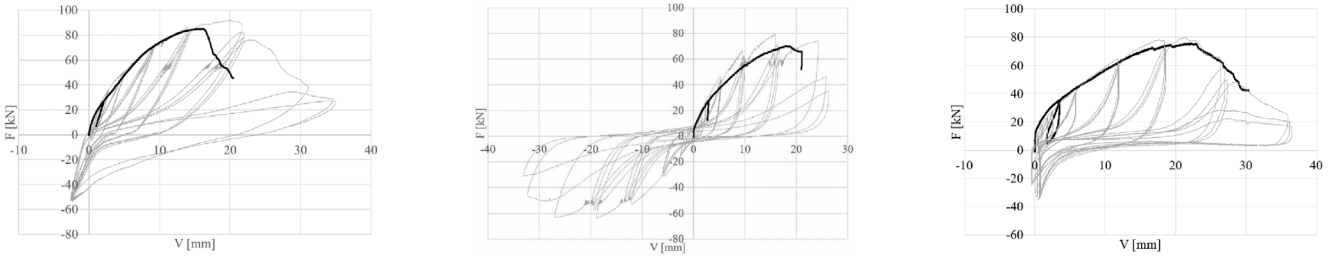

Monotonic and cyclic load-displacement curves for tension (a), shear (b) and 45° (c) (partial fastening).

EXPERIMENTAL STRENGTH DOMAIN

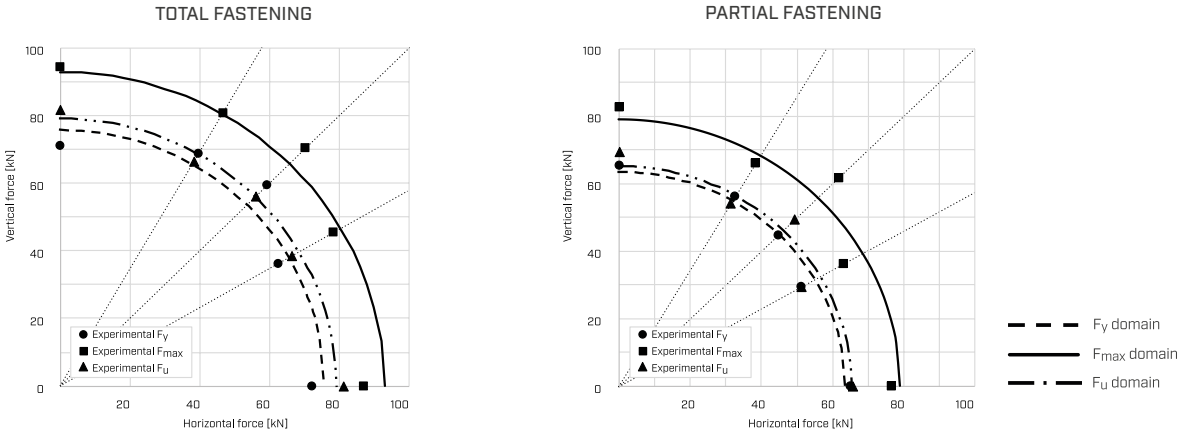

NOTES

(1) Full fastening - Full nailing:
- 5 VGS Ø11x150 mm e 36+30 LBA Ø4x60 mm for 90°/60°/45°/30°
- 2 VGS and 36+30 LBA Ø4x60 mm for 0°

Partial fastening - Partial nailing:
- 5 VGS Ø11x150 mm and 24+24 LBA Ø4x60 mm for 90°/60°/45°/30°
- 2 VGS and 24+24 LBA Ø4x60 mm for 0°

HOLD-DOWN RANGE

ALL SOLUTIONS IN ONE RANGE

Predimensioning tables for choosing the most suitable angle bracket depending on the construction system, configuration and acting stresses.

PRODUCT		CODE	pattern	CLT	TIMBER FRAME $B_{ST\ min}$ [mm]				$H_{B\ max}$	$R_{1,k\ max}$
					38	45	60	80	[mm]	[kN]
WKR DOUBLE	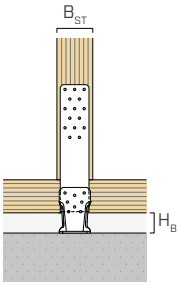	**WKRD40**	full pattern	●	-	●	●	●	210	20,0
		WKRD60	full pattern	●	-	-	-	●	230	40,0
		WKRD60L	full pattern	-	●	●	●	●	210	26,0
		WKRD60R	full pattern	-	●	●	●	●	210	26,0
WKR	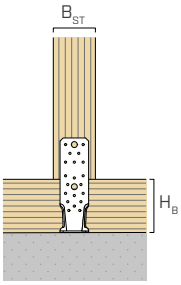	**WKR09530**	pattern 1	●	-	-	-	●	30	15,0
		WKR13535	pattern 1	●	-	-	-	●	30	26,0
		WKR21535	pattern 1	●	-	-	-	●	30	26,0
			pattern 3	●	-	-	-	●	130	18,7
			pattern 4	●	-	-	●	●	130	8,0
		WKR28535	pattern 1	●	-	-	-	●	130	26,0
			pattern 2	●	-	-	-	●	30	26,0
			pattern 4	●	-	-	●	●	130	21,3
		WKR53035	pattern 1	●	-	-	-	●	370	26,0
			pattern 4	●	-	-	●	●	280	26,0
WHT (ETA-23/0813)	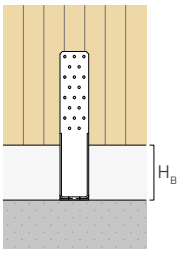	**WHT15**	narrow - no washer	●	-	-	●	●	110	22,6
			wide - no washer	●	-	-	-	●	110	35,5 [(1)]
			wide	●	-	-	-	●	110	36,8
		WHT20	narrow - no washer	●	-	-	●	●	110	28,3
			wide - no washer	●	-	-	-	●	110	47,3 [(1)]
			wide	●	-	-	-	●	110	48,3
		WHT30	narrow	●	-	-	●	●	140	45,3
			wide	●	-	-	-	●	140	82,7 [(1)]
		WHT40	narrow	●	-	-	●	●	140	59,4
			wide	●	-	-	-	●	140	106,4 [(1)]
		WHT55	narrow	●	-	-	●	●	140	84,9
			wide	●	-	-	-	●	140	141,8 [(1)]

[(1)]The characteristic strength values ($R_{1,k\ max}$) for the timber-side only, calculated according to EN 1995:2014. Depending on the installation and product configuration, the values may be limited by the steel-side and concrete-side strength.

EXTERNAL LOADS

Certified tensile strengths (R_1) with the possibility of installation of the angle brackets raised above the support surface (installation with GAP).
Different full pattern and partial pattern fastening configurations can be calculated with different connectors.

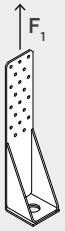

NEW WHT AND NEW PERFORMANCE

MODEL COMPARISON: NEW WHT FROM ETA-23/0813 AND WHT FROM ETA-11/0086

The WHT hold-downs according to ETA-11/0086 have been completely redesigned to make the most of the strengths of the new LBA nails (ETA-22/0002) and LBSH screws (ETA-11/0030).
The new models are more versatile in terms of fastening possibilities, installation configurations and allow for higher strengths.
Below is a comparison of the models taking into account the number of holes (n_v), the thickness of the vertical flange (s) and the maximum design tensile strength ($R_{1,d\ max}$).

For more specific evaluations, refer to the data sheet on page 278.

OLD ETA-11/0086	NEW ETA-23/0813	n_v [pz.]	s [mm]	$R_{1,d\ max}$ [kN]
WHT340	WHT15	20 → 15	3 mm → 2,5 mm	32,7 / 40,0
WHT440	WHT20	30 → 20	3 mm → 3 mm	49,0 / 50,0
WHT540	WHT30	45 → 30	3 mm → 3 mm	50,7 / 70,0
WHT620	WHT40	55 → 40	3 mm → 4 mm	68,2 / 90,0
WHT740	WHT55	75 → 55	3 mm → 5 mm	122,5 / 120,0

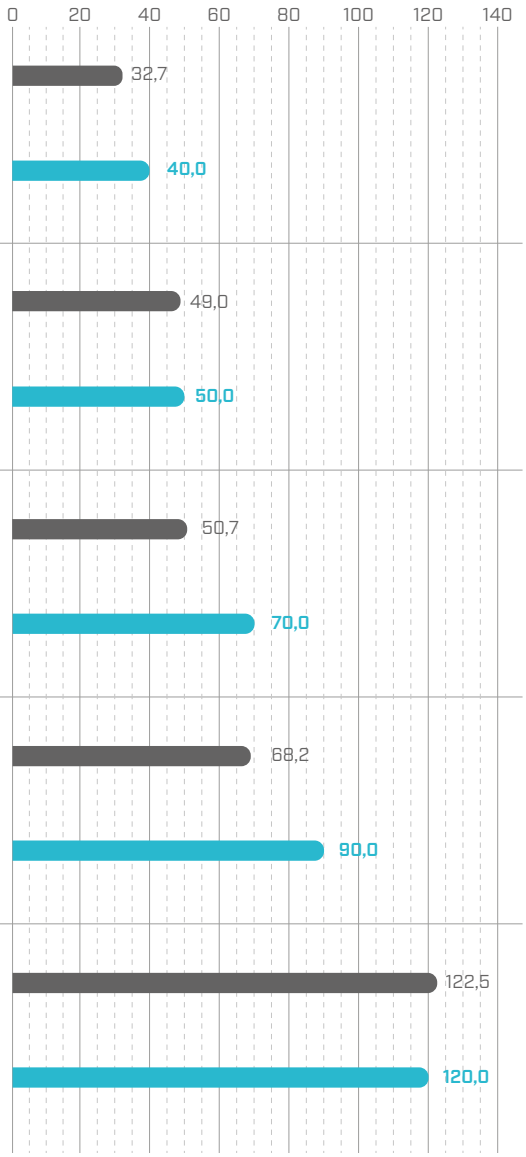

The strength values shown in the table are to be considered as indicative values provided to guide the designer in the choice of the angle bracket. The final verification must be carried out in accordance with the technical specifications given on the individual product pages, depending on the design requirements and the actual boundary conditions.

NOTES

To enable comparison, design strength values are indicated in the table. These are calculated considering the following partial coefficients according to EN 1995:2014 and EN 1993:2014:

- the correction coefficient k_{mod} is assumed to be 1.1;
- the coefficient γ_M is the safety coefficient on the timber joint side and is assumed to be 1.3;
- γ_{M0} and γ_{M2} are the partial safety coefficients of the steel material assumed to be 1.00 and 1.25 respectively.

WKR

DESIGN REGISTERED

CE ETA-22/0089

TENSILE ANGLE BRACKET FOR BUILDINGS

TIMBER FRAME AND CLT
Ideal for timber frame and CLT because of the optimized nailing patterns. Certified configurations with the presence of bedding grout, base plate or concrete kerb.

TIMBER-TO-TIMBER CONFIGURATION
Exceptional strength values also for installation in timber-to-timber configuration. Possibility of installation with passing bolts or with VGS screws or HBS PLATE.

CERTIFICATION WITH GAP
Certification with raised installation opens up numerous application possibilities for solving non-standard connections or managing tolerances in innovative ways.

USA, Canada and more design values available online.

SERVICE CLASS SC1 SC2

MATERIAL

S250 Z275 **WKR9530**: S250GD + Z275 carbon steel

S235 Fe/Zn12c **WKR13535** | **WKR21535** | **WKR28535** | **WKR53035**: S235 + Fe/Zn12c carbon steel

EXTERNAL LOADS

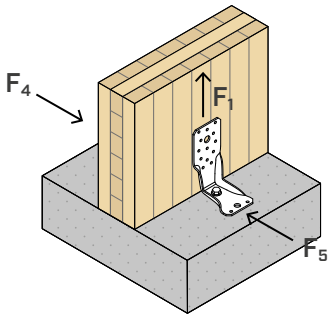

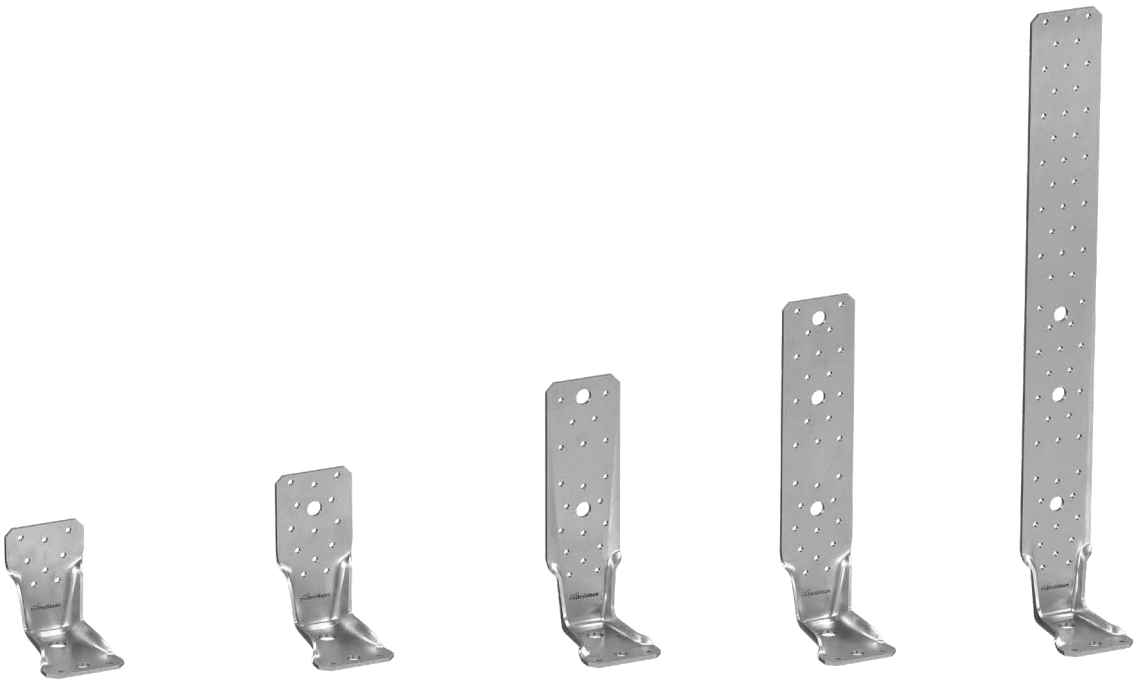

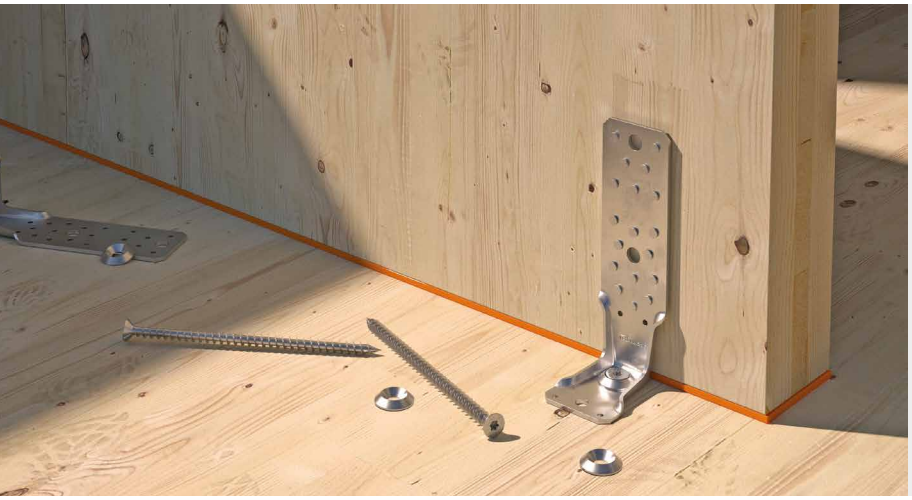

FIELDS OF USE

Tension joints with small to medium stress. Also optimised for fastening frame walls. Timber-to-timber, timber-to-concrete and timber-to-steel configurations.

Can be applied to:
- solid timber and glulam
- timber frame
- CLT and LVL panels



RAISED WALL

Partial nailing patterns allow installation on timber frame or CLT walls in the presence of concrete kerbs up to 370 mm high.

PREFABRICATION

On prefabricated timber frame walls, it is possible to pre-install the anchor in the concrete and the angle bracket on the wall. With a MUT 6334 joint nut and threaded rod, it is possible to complete the connection on site, managing all installation tolerances as best as possible.

CODES AND DIMENSIONS

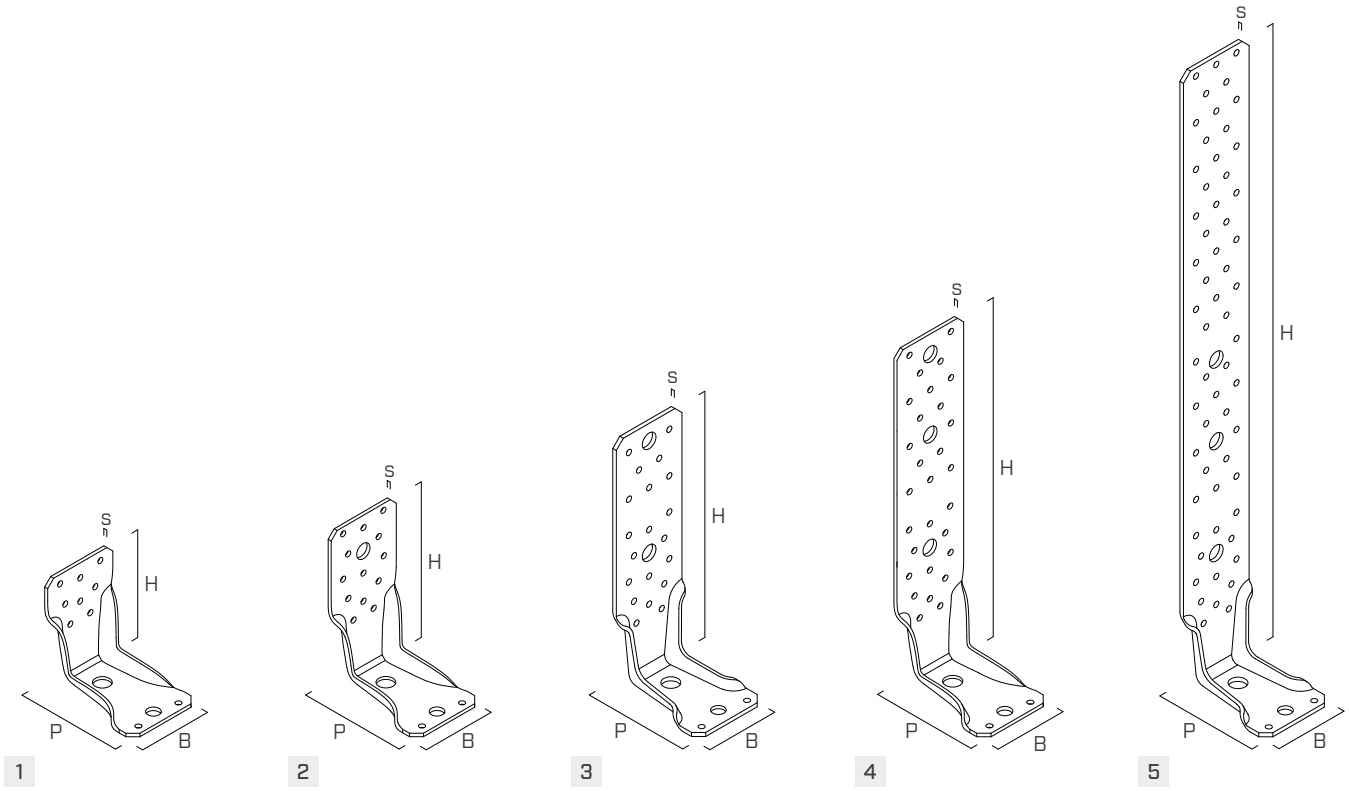

	CODE	B [mm]	P [mm]	H [mm]	s [mm]	*B [in]*	*P [in]*	*H [in]*	*s [in]*	n_V Ø5 *n_V Ø0.20* [pcs]	n_H Ø14 *n_H Ø0.56* [pcs]	n_H Ø11 *n_H Ø0.44* [pcs]	n_V Ø13,5 *n_V Ø0.53* [pcs]			pcs
1	**WKR9530**	65	85	95	3	*2 9/16*	*3 3/8*	*3 3/4*	*0.12*	8	1	1	-	●	●	25
2	**WKR13535**	65	85	135	3,5	*2 9/16*	*3 3/8*	*5 5/16*	*0.14*	13	1	1	1	●	●	25
3	**WKR21535**	65	85	215	3,5	*2 9/16*	*3 3/8*	*8 7/16*	*0.14*	20	1	1	2	●	●	25
4	**WKR28535**	65	85	287	3,5	*2 9/16*	*3 3/8*	*11 5/16*	*0.14*	29	1	1	3	●	●	25
5	**WKR53035**	65	85	530	3,5	*2 9/16*	*3 3/8*	*20 7/8*	*0.14*	59	1	1	3	●	●	10

FASTENERS

type	description		d [mm]	support	page
LBA	high bond nail		4		570
LBS	round head screw	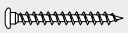	5		571
VGS	fully threaded countersunk screw	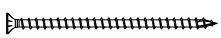	11-13		575
HUS	turned washer		11-13		569
HBS PLATE	pan head screw		10-12		573
AB1	CE1 expansion anchor		12		536
SKR	screw-in anchor	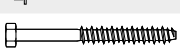	M12		528
VIN-FIX	vinyl ester chemical anchor	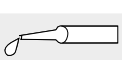	M12		545
HYB-FIX	hybrid chemical anchor	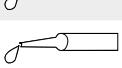	M12		552
EPO-FIX	epoxy chemical anchor		M12		557

FASTENING PATTERNS

TIMBER-TO-TIMBER

WKR9530

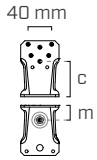

pattern 2

WKR13535

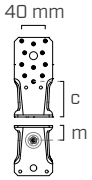

pattern 2

WKR21535

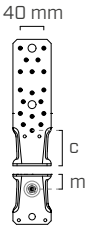

pattern 2

WKR28535

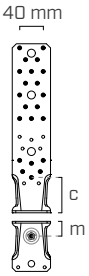

pattern 3

TIMBER-TO-CONCRETE

WKR9530

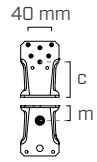

pattern 1

WKR13535

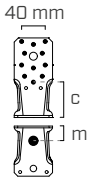

pattern 1

WKR21535

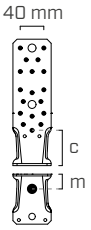

pattern 1

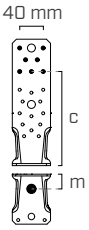

pattern 3

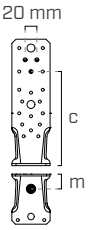

pattern 4

WKR28535

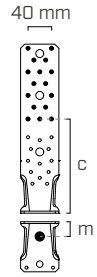

pattern 1

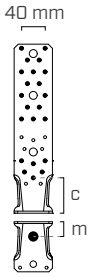

pattern 2

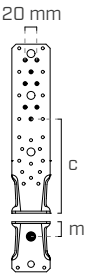

pattern 3

WKR53035

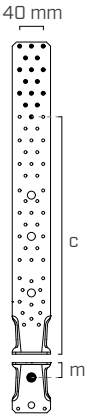

pattern 4

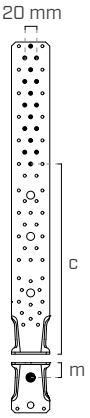

pattern 5

CODE	configuration	fastening holes Ø5 n_V [pcs]	c [mm]	m [mm]	support	
WKR9530	pattern 1	6	60	25	-	●
	pattern 2	6	60		●	-
WKR13535	pattern 1	11	60		-	●
	pattern 2	11	60		●	-
WKR21535	pattern 1	18	60		-	●
	pattern 2	18	60		●	-
	pattern 3	7	160		-	●
	pattern 4	3	160		-	●
WKR28535	pattern 1	16	160		-	●
	pattern 2	22	60		-	●
	pattern 3	22	60		●	-
	pattern 4	8	160		-	●
WKR53035	pattern 1	16	400		-	●
	pattern 2	16	320		-	●

INSTALLATION

MAXIMUM HEIGHT OF THE INTERMEDIATE H_B LAYER

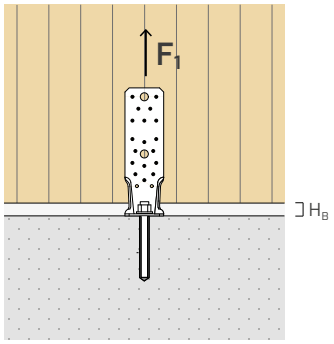

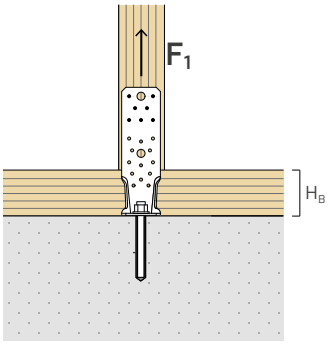

CODE	configuration	$H_{B\,max}$ [mm]			
		CLT		C/GL	
		nails LBA Ø4	screws LBS Ø5	nails LBA Ø4	screws LBS Ø5
WKR9530	pattern 1 pattern 2	20	30	-	-
WKR13535	pattern 1 pattern 2	20	30	-	-
WKR21535	pattern 1 pattern 2	20	30	-	-
	pattern 3 pattern 4	120	130	100	85
WKR28535	pattern 1 pattern 4	120	130	100	85
	pattern 2 pattern 3	20	30	-	-
WKR53035	pattern 1	360	370	340	325
	pattern 2	280	270	260	245

The height of the H_B intermediate layer (levelling grout, sill or timber platform beam) is determined by taking into account the regulatory requirements for fastenings on timber, shown in the minimum distance table.

MINIMUM DISTANCES

TIMBER			nails LBA Ø4	screws LBS Ø5
C/GL	$a_{4,c}$	[mm]	≥ 20	≥ 25
	$a_{3,t}$	[mm]	≥ 60	≥ 75
CLT	$a_{4,c}$	[mm]	≥ 12	≥ 12,5
	$a_{3,t}$	[mm]	≥ 40	≥ 30

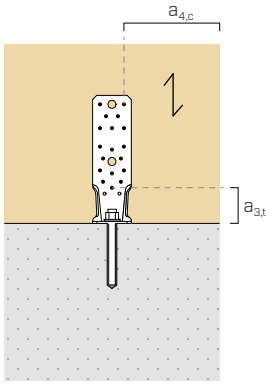

- C/GL: minimum distances for solid timber or glulam consistent with EN 1995:2014 according to ETA considering a timber density $\rho_k \leq 420$ kg/m^3.
- CLT: minimum distances for Cross Laminated Timber according to ÖNORM EN 1995:2014 (Annex K) for nails and ETA-11/0030 for screws.

INSTALLATION WITH GAP

In the presence of F1 tensile forces, installation of the angle bracket raised above the bearing surface is possible. This makes it possible, for example, to install the angle bracket even with an intermediate H_B layer (bedding grout, base plate or concrete kerb) greater than $H_{B\,max}$. It is advisable to add a lock nut under the horizontal flange to prevent any tension in the connection caused by over-tightening the nut.

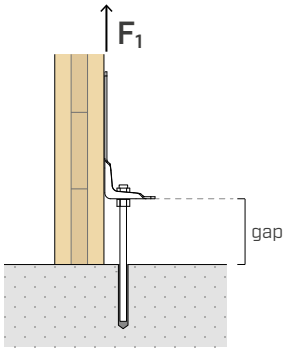

STRUCTURAL VALUES | TIMBER-TO-TIMBER | F_1

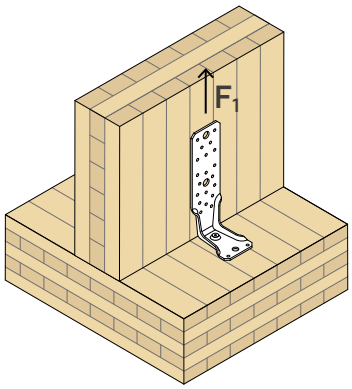

TIMBER STRENGTH

CODE	configuration	fastening holes Ø5			$R_{1,k\ timber}$ [1]	$K_{1,ser}$
		type	Ø x L [mm]	n_V [pcs]	[kN]	[kN/mm]
WKR9530	**pattern 2**	LBA	Ø4 x 60	6	**15,0**	$R_{1,k\ timber}$ /4
		LBS	Ø5 x 50		**13,3**	
WKR13535	**pattern 2**	LBA	Ø4 x 60	11	**28,3**	
		LBS	Ø5 x 50		**24,6**	
WKR21535	**pattern 2**	LBA	Ø4 x 60	18	**47,0**	
		LBS	Ø5 x 50		**40,3**	
WKR28535	**pattern 3**	LBA	Ø4 x 60	22	**57,6**	
		LBS	Ø5 x 50		**49,3**	

STRENGTH ON STEEL SIDE

connector	WKR	$R_{1,k\ screw,head}$ [*]	
		[kN]	γ_{steel}
VGS Ø11 + HUS 10	WKR9530 / WKR13535 / WKR21535 / WKR28535	$R_{tens,k}$	γ_{M2}
VGS Ø13 + HUS 12			
HBS PLATE Ø10	WKR9530	**20,0**	
	WKR13535 / WKR21535 / WKR28535	**21,0**	
HBS PLATE Ø12	WKR9530	**27,0**	
	WKR13535 / WKR21535 / WKR28535	**29,0**	

[*] The values in the table refer to a punching shear failure of the connector in the horizontal flange.

STRENGTH ON ANCHOR SYSTEM SIDE

Strength values of some of the possible fastening solutions.

CODE	configuration	$k_{t//}$	fastening holes Ø14	
			type [2]	$R_{1,k,screw,ax}$ [3] [kN]
WKR9530	**pattern 2**	1,05	HBS PLATE Ø10x140	**13,9**
			HBS PLATE Ø10x180	**18,9**
WKR13535	**pattern 2**	1,05	HBS PLATE Ø12x140	**16,7**
			HBS PLATE Ø12x200	**24,2**
WKR21535	**pattern 2**	1,10	VGS Ø11x150 + HUS10	**19,5**
			VGS Ø11x200 + HUS10	**26,4**
WKR28535	**pattern 3**	1,10	VGS Ø13x150 + HUS12	**23,0**
			VGS Ø13x200 + HUS12	**31,2**

NOTES

[1] Installation with nails and screws of shorter length than proposed in the table is possible. In this case, the bearing capacity values $R_{1,k\ timber}$ must be multiplied by the following reductive factor k_F:

- for nails

$$k_F = min\left\{\frac{F_{v,short,Rk}}{2,66\ kN}\ ;\frac{F_{ax,short,Rk}}{1,28\ kN}\right\}$$

- for screws

$$k_F = min\left\{\frac{F_{v,short,Rk}}{2,25\ kN}\ ;\frac{F_{ax,short,Rk}}{2,63\ kN}\right\}$$

$F_{v,short,Rk}$ = characteristic shear strength of the nail or screw

$F_{ax,short,Rk}$ = characteristic withdrawal strength of the nail or screw

[2] If there are design requirements such as F_1 stresses of different amounts, or depending on the thickness of the floor slab, it is possible to use Ø11 and Ø13 VGS screws with HUS10 and HUS12 washers and Ø10 and Ø12 HBS PLATE screws of different lengths than those proposed in the table (see the " TIMBER SCREWS AND DECK FASTENING" catalogue).

[3] The $R_{1,k,screw,ax}$ values can be consulted in the "TIMBER SCREWS AND DECK FASTENING".

STRUCTURAL VALUES | TIMBER-TO-CONCRETE | F_1

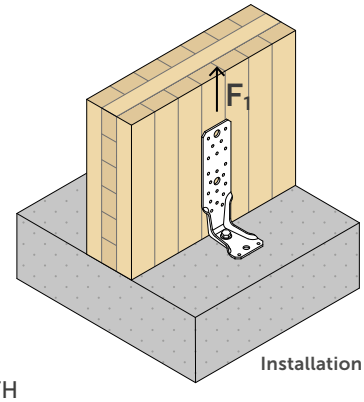

Installation without GAP

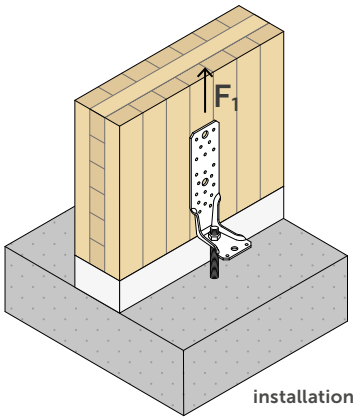

installation with GAP

TIMBER STRENGTH

CODE	configuration	fastening holes Ø5			$R_{1,k\ timber}$ [1]	$K_{1,ser}$
		type	Ø x L [mm]	n_V [pcs]	[kN]	[kN/mm]
WKR9530	pattern 1	LBA	Ø4 x 60	6	**15,0**	$R_{1,k\ timber}$ /4
		LBS	Ø5 x 50		**13,3**	
WKR13535	pattern 1	LBA	Ø4 x 60	11	**28,3**	
		LBS	Ø5 x 50		**24,6**	
WKR21535	pattern 1	LBA	Ø4 x 60	18	**47,0**	
		LBS	Ø5 x 50		**40,3**	
	pattern 3	LBA	Ø4 x 60	7	**18,7**	
		LBS	Ø5 x 50		**15,8**	
	pattern 4	LBA	Ø4 x 60	3	**8,0**	
		LBS	Ø5 x 50		**6,8**	
WKR28535	pattern 1	LBA	Ø4 x 60	16	**37,3**	
		LBS	Ø5 x 50		**36,0**	
	pattern 2	LBA	Ø4 x 60	22	**57,6**	
		LBS	Ø5 x 50		**49,3**	
	pattern 4	LBA	Ø4 x 60	8	**21,3**	
		LBS	Ø5 x 50		**18,0**	
WKR53035	pattern 1-2	LBA	Ø4 x 60	16	**42,6**	
		LBS	Ø5 x 50		**36,0**	

STRENGTH ON STEEL SIDE

CODE	configuration	$R_{1,k,bolt,head}$ [*]		γ_{steel}
		no gap [kN]	gap [kN]	
WKR9530	pattern 1	26	**8,3**	γ_{M2}
WKR13535	pattern 1		**19**	
WKR21535	pattern 1		**19**	
	pattern 3-4		**-**	
WKR28535	pattern 1-4		-	
	pattern 2		**19**	
WKR53035	pattern 1-2		-	

(*) The values in the table refer to a punching shear failure of the connector in the horizontal flange.

NOTES

(1) Installation with nails and screws of a shorter length than proposed in the table is possible by multiplying the load-bearing capacity values $R_{1,k\ timber}$ by the following reductive factor k_F:

- for nails

$$k_F = min\left\{\frac{F_{v,short,Rk}}{2{,}66\ kN}\ ;\ \frac{F_{ax,short,Rk}}{1{,}28\ kN}\right\}$$

- for screws

$$k_F = min\left\{\frac{F_{v,short,Rk}}{2{,}25\ kN}\ ;\ \frac{F_{ax,short,Rk}}{2{,}63\ kN}\right\}$$

$F_{v,short,Rk}$ = characteristic shear strength of the nail or screw

$F_{ax,short,Rk}$ = characteristic withdrawal strength of the nail or screw

- In the presence of an H_B intermediate layer (levelling grout, sill or platform) with nails on CLT and $a_{3,t} < 60$ mm, the $R_{1,k\ timber}$ values in the table must be multiplied by a 0,93 coefficient.
- If there are design requirements such as the presence of an intermediate H_B layer (levelling grout, sill or platform) greater than $H_{B\ max}$, the installation of the angle bracket raised above the bearing surface (gap installation) is allowed.

CONCRETE STRENGTH

Strength values of some of the possible fastening solutions. For additional solutions, different from those indicated in the table, it is possible to use the My Project software available at www.rothoblaas.com.

CODE	configuration on concrete	fastening holes Ø14		$R_{1,d\ concrete}$ no gap				$R_{1,d\ concrete}$ gap	
		type	Ø x L	pattern 1	pattern 2	pattern 3	pattern 4	pattern 1	pattern 2
			[mm]	[kN]	[kN]	[kN]	[kN]	[kN]	[kN]
WKR9530 WKR13535	uncracked	VIN-FIX 5.8	M12 x 195	**26,6**	-	-	-	**28,0**	-
		SKR	12 x 90	**10,1**	-	-	-	-	-
		AB1	M12 x 100	**17,4**	-	-	-	-	-
	cracked	VIN-FIX 5.8	M12 x 195	**19,5**	-	-	-	**20,5**	-
		HYB-FIX 5.8	M12 x 195	**26,7**	-	-	-	**28,0**	-
		AB1	M12 x 100	**10,2**	-	-	-	-	-
	seismic	HYB-FIX 8.8	M12 x 195	**14,6**	-	-	-	**15,4**	-
			M12 x 245	**18,1**	-	-	-	**19,0**	-
		EPO-FIX 8.8	M12 x 195	**23,6**	-	-	-	**24,8**	-
WKR21535	uncracked	VIN-FIX 5.8	M12 x 195	**25,4**	-	**19,3**	**19,3**	**28,0**	-
		SKR	12 x 90	**9,6**	-	**7,3**	**9,6**	-	-
		AB1	M12 x 100	**16,6**	-	**12,6**	**12,6**	-	-
	cracked	VIN-FIX 5.8	M12 x 195	**18,6**	-	**14,1**	**14,1**	**20,5**	-
		HYB-FIX 5.8	M12 x 195	**25,5**	-	**19,3**	**19,3**	**28,0**	-
		AB1	M12 x 100	**9,7**	-	**7,4**	**7,4**	-	-
	seismic	HYB-FIX 8.8	M12 x 195	**14,0**	-	**10,6**	**10,6**	**15,4**	-
			M12 x 245	**17,3**	-	**13,1**	**13,1**	**19,0**	-
		EPO-FIX 8.8	M12 x 195	**22,5**	-	**17,1**	**17,1**	**24,8**	-
WKR28535	uncracked	VIN-FIX 5.8	M12 x 195	**19,3**	**25,4**	-	**19,3**	-	**28,0**
		SKR	12 x 90	**7,3**	**9,6**	-	**9,6**	-	-
		AB1	M12 x 100	**12,6**	**16,6**	-	**12,6**	-	-
	cracked	VIN-FIX 5.8	M12 x 195	**14,1**	**18,6**	-	**14,1**	-	**20,5**
		HYB-FIX 5.8	M12 x 195	**19,3**	**25,5**	-	**19,3**	-	**28,0**
		AB1	M12 x 100	**7,4**	**9,7**	-	**7,4**	-	-
	seismic	HYB-FIX 8.8	M12 x 195	**10,6**	**14,0**	-	**10,6**	-	**15,4**
			M12 x 245	**13,1**	**17,3**	-	**13,1**	-	**19,0**
		EPO-FIX 8.8	M12 x 195	**17,1**	**22,5**	-	**17,1**	-	**24,8**
WKR53035	uncracked	VIN-FIX 5.8	M12 x 195	**19,3**	**19,3**	-	-	-	-
		SKR	12 x 90	**7,3**	**9,6**	-	-	-	-
		AB1	M12 x 100	**12,6**	**12,6**	-	-	-	-
	cracked	VIN-FIX 5.8	M12 x 195	**14,1**	**14,1**	-	-	-	-
		HYB-FIX 5.8	M12 x 195	**19,3**	**19,3**	-	-	-	-
		AB1	M12 x 100	**7,4**	**7,4**	-	-	-	-
	seismic	HYB-FIX 8.8	M12 x 195	**10,6**	**10,6**	-	-	-	-
			M12 x 245	**13,1**	**13,1**	-	-	-	-
		EPO-FIX 8.8	M12 x 195	**17,1**	**17,1**	-	-	-	-

NOTES

- The gap installation must be carried out with only chemical anchors and pre-cut INA threaded rod or MGS to be cut to size.

ANCHORS INSTALLATION PARAMETERS

anchor type		h_{ef}	h_{nom}	h_1	d_0	h_{min}
	Ø x L [mm]	[mm]	[mm]	[mm]	[mm]	[mm]
VIN-FIX 5.8	M12 x 195	170	170	175	14	200
HYB-FIX 5.8	M12 x 195	170	170	175	14	200
HYB-FIX 8.8	M12 x 195	170	170	175	14	200
	M12 x 245	210	210	215	14	250
EPO-FIX 8.8	M12 x 195	170	170	175	14	200
SKR	12 x 90	64	87	110	10	200
AB1	M12 x 100	70	80	85	14	200

Precut INA threaded rod, with nut and washer: see page 562.
MGS threaded rod class 8.8 to be cut to size: see page 174.

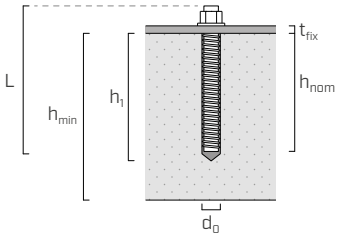

t_{fix}	fastened plate thickness
h_{nom}	nominal anchoring depth
h_{ef}	effective anchoring depth
h_1	minimum hole depth
d_0	hole diameter in the concrete support
h_{min}	concrete minimum thickness

ANCHORS VERIFICATION FOR STRESS LOADING F_1

Fastening elements to the concrete through anchors not listed in the table, shall be verified according to the load acting on the anchors, which can be evaluated through the $k_{t//}$ coefficients. The axial load acting on the anchor can be obtained as follows:

$$F_{bolt//,d} = k_{t//} \cdot F_{1,d}$$

$k_{t//}$ coefficient of eccentricity
$F_{1,d}$ axial load on the WKR angle bracket

The anchor check is satisfied if the design tensile strength, obtained considering the boundary effects, is greater than the design external load: $R_{bolt//,d} \geq F_{bolt//,d}$.

	INSTALLATION WITHOUT GAP		INSTALLATION WITH GAP	
CODE	**configuration**	$k_{t//}$	**configuration**	$k_{t//}$
WKR9530	**pattern 1-2**	1,05	**pattern 2**	1,00
WKR13535	**pattern 1-2**	1,05	**pattern 2**	
WKR21535	**pattern 1-2**	1,10	**pattern 2**	
	pattern 3-4	1,45		
WKR28535	**pattern 2-3**	1,10	**pattern 3**	
	pattern 1-4	1,45		
WKR53035	**pattern 1-2**	1,45	-	-

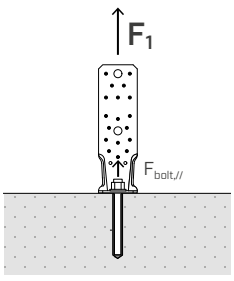

NOTES
(1) Valid for the strength values shown in the table.

STRUCTURAL VALUES | F_4 | F_5

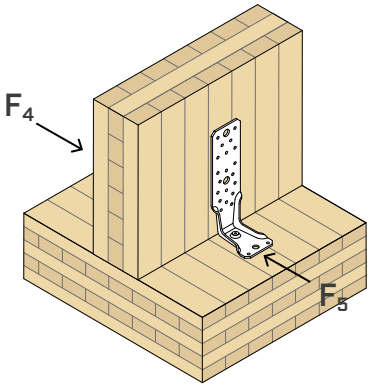

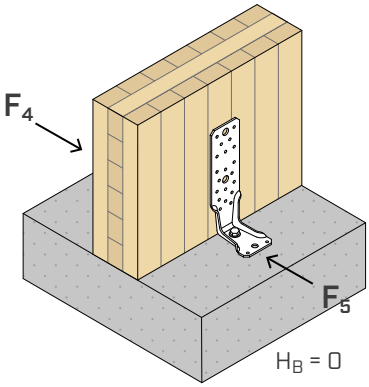

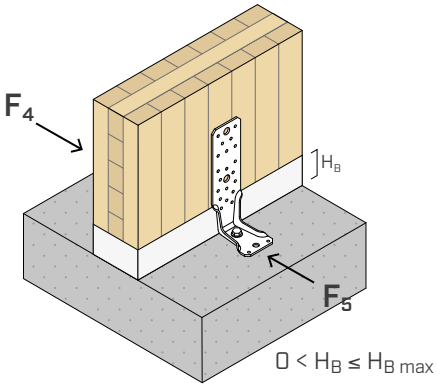

TIMBER-TO-TIMBER

CODE	configuration	fastening holes Ø5 type	Ø x L [mm]	n_V [pcs]	$R_{4,k\ timber}$ (1) [kN]	$R_{5,k\ timber}$ (1) [kN]	l_{BL} (2) [mm]
WKR9530	**pattern 2**	LBA LBS	Ø4 x 60 Ø5 x 50	6	**14,7** **14,1**	**2,6** **3,4**	70,0
WKR13535	**pattern 2**	LBA LBS	Ø4 x 60 Ø5 x 50	11	**18,3** **17,2**	**2,6** **3,6**	
WKR21535	**pattern 2**	LBA LBS	Ø4 x 60 Ø5 x 50	18	**23,0** **21,1**	**2,6** **3,6**	
WKR28535	**pattern 3**	LBA LBS	Ø4 x 60 Ø5 x 50	22	**25,6** **23,4**	**2,6** **3,6**	

TIMBER-TO-CONCRETE

CODE	configuration	fastening holes Ø5 type	Ø x L [mm]	n_V [pcs]	$H_B = 0$ $R_{4,k\ timber}$ (1) [kN]	$H_B = 0$ $R_{5,k\ timber}$ (1) [kN]	$0 < H_B \leq H_{B\ max}$ $R_{4,k\ timber}$ (1) [kN]	$0 < H_B \leq H_{B\ max}$ $R_{5,k\ timber}$ (1) [kN]	l_{BL} (2) [mm]
WKR9530	**pattern 1**	LBA LBS	Ø4 x 60 Ø5 x 50	6	**14,7** **14,1**	**2,6** **3,4**	**11,3** **10,7**	**2,6** **3,4**	70,0
WKR13535	**pattern 1**	LBA LBS	Ø4 x 60 Ø5 x 50	11	**18,3** **17,2**	**2,6** **3,6**	**14,9** **13,8**	**2,6** **3,6**	70,0
WKR21535	**pattern 1**	LBA LBS	Ø4 x 60 Ø5 x 50	18	**23,0** **21,1**	**2,6** **3,6**	**19,6** **17,7**	**2,6** **3,6**	70,0
WKR28535	**pattern 1**	LBA LBS	Ø4 x 60 Ø5 x 50	16	**21,7** **20,0**	**1,0** **1,0**	**13,0** **11,3**	**0,9** **0,9**	160,0
	pattern 2	LBA LBS	Ø4 x 60 Ø5 x 50	22	**25,6** **23,4**	**2,6** **3,6**	**22,3** **20,0**	**2,6** **3,6**	70,0
WKR53035	**pattern 1**	LBA LBS	Ø4 x 60 Ø5 x 50	16	**21,7** **20,0**	**0,3** **0,3**	**11,5** **9,8**	**0,3** **0,3**	343,0
	pattern 2	LBA LBS	Ø4 x 60 Ø5 x 50	16	**21,7** **20,0**	**0,3** **0,3**	**11,5** **9,8**	**0,3** **0,3**	423,0

NOTES

(1) Installation with nails and screws of shorter length than proposed in the table is possible. In this case, the bearing capacity values $R_{4,k\ timber}$ and $R_{5,k\ timber}$ must be multiplied by the following reductive factor k_F:

- for nails

$$k_F = min \left\{ \frac{F_{v,short,Rk}}{2,66\ kN} ; \frac{F_{ax,short,Rk}}{1,28\ kN} \right\}$$

- for screws

$$k_F = min \left\{ \frac{F_{v,short,Rk}}{2,25\ kN} ; \frac{F_{ax,short,Rk}}{2,63\ kN} \right\}$$

$F_{v,short,Rk}$ = characteristic shear strength of the nail or screw

$F_{ax,short,Rk}$ = characteristic withdrawal strength of the nail or screw

(1) In the case of $F_{5,Ed}$ stress, it is required to verify for the simultaneous shear action on the $F_{v,Ed}$ anchor and the additional extraction component $F_{ax,Ed}$:

$$F_{ax,Ed} = \frac{F_{5,Ed} \cdot l_{BL}}{25\ mm}$$

l_{BL} = distance between the last row of at least two connectors and the bearing surface

- The $R_{4,k\ timber}$ resistance is limited by the lateral $R_{v,k}$ resistance of the base connector.
- Refer to ETA-22/0089 for $K_{4,ser}$ stiffness values in timber-to-timber configuration.

CALCULATION EXAMPLES | DETERMINING RESISTANCE R_{1d}

TIMBER-TO-TIMBER

Project data	
Service class	SC1
Load duration	instantaneous
Connector	**WKR9530**
Configuration	pattern 2
Fastening on timber	nails LBA Ø4 x 60 mm
Screw selection	
HBS PLATE	Ø10 x 140 mm
Pre-drilling hole	without pre-drilled hole

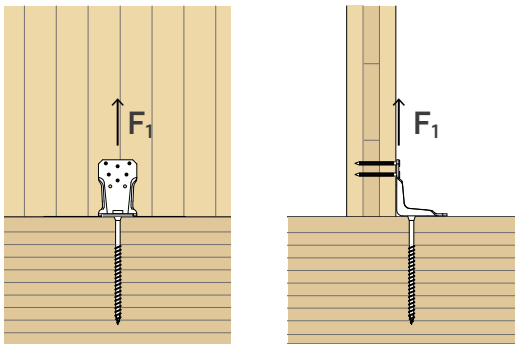

EN 1995:2014

k_{mod} = 1,1
γ_M = 1,3
γ_{M2} = 1,25
$k_{t//}$ = 1,05
$R_{1,k,\ timber}$ = 15,0 kN
$R_{1,k,screw,head}$ = 20,0 kN
$R_{1,k,\ screw,ax}$ = 13,9 kN

$$R_{1,d} = min \begin{cases} \frac{R_{1,k\ timber} \cdot k_{mod}}{\gamma_M} = \mathbf{12,7}\ [kN] \\ \frac{R_{1,k,screw,head}}{\gamma_{M2}} = \mathbf{16,0}\ [kN] \\ \frac{R_{1,k,screw,ax}}{k_{t//}} \cdot \frac{k_{mod}}{\gamma_M} = \mathbf{11,2}\ [kN] \end{cases}$$

$R_{1,d}$ = **11,2** kN ✓

TIMBER-TO-CONCRETE | INSTALLATION WITH GAP

Project data	
Service class	SC1
Load duration	instantaneous
Connector	**WKR13535**
Configuration	pattern 1 with gap
Fastening on timber	nails LBA Ø4 x 60 mm
Anchor choice	
VIN-FIX anchor	M12 x 195 (5.8 steel class)
Uncracked concrete	

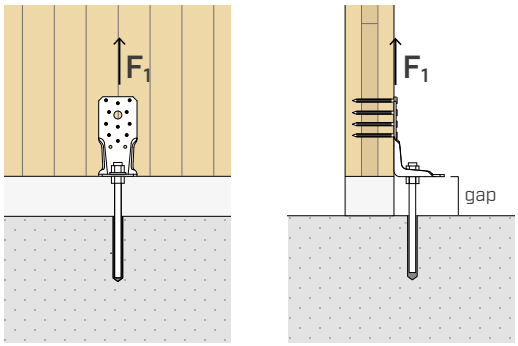

EN 1995:2014

k_{mod} = 1,1
γ_M = 1,3
γ_{M2} = 1,25
$R_{1,k\ timber}$ = 28,3 kN
$R_{1,k,bolt,head}$ = 19,0 kN
$R_{1,d\ concrete}$ = 28,0 kN

$$R_{1,d} = min \begin{cases} \frac{R_{1,k\ timber} \cdot k_{mod}}{\gamma_M} = \mathbf{23,95}\ [kN] \\ \frac{R_{1,k,bolt,head}}{\gamma_{M2}} = \mathbf{15,2}\ [kN] \\ R_{1,d\ concrete} = \mathbf{28,0}\ [kN] \end{cases}$$

$R_{1,d}$ = **15,2** kN ✓

GENERAL PRINCIPLES

- Characteristic values comply with the EN1995:2014 standard in accordance with ETA-22/0089.
- Design values can be obtained from values in the table as follows:

  TIMBER-TO-CONCRETE INSTALLATION

$$R_d = min \begin{cases} \frac{R_{k,\ timber} \cdot k_{mod}}{\gamma_M} \\ \frac{R_{k\ bolt,\ head}}{\gamma_{M2}} \\ R_{d,\ concrete} \end{cases}$$

  TIMBER-TO- TIMBER INSTALLATION

$$R_d = min \begin{cases} \frac{R_{k,\ timber} \cdot k_{mod}}{\gamma_M} \\ \frac{R_{k,screw,ax}}{k_{t//}} \cdot \frac{k_{mod}}{\gamma_M} \\ \frac{R_{k,screw,head}}{\gamma_{M2}} \end{cases}$$

  The coefficients k_{mod}, γ_M and γ_{M2} should be taken according to the current regulations used for the calculation.
- The use of nails is allowed in accordance with EN 14592, in this case the bearing capacity values $R_{1,k\ timber}$ must be multiplied by the following reductive factor K_{rid}:

$$k_{rid} = min \left\{ \frac{F_{v,EN\ 14592,Rk}}{2{,}66\ kN} ; \frac{F_{ax,EN\ 14592,Rk}}{1{,}28\ kN} \right\}$$

- Dimensioning and verification of timber and concrete elements must be carried out separately. Verify that there are no brittle failures before reaching the connection strength.
- Structural elements in timber, to which the connection devices are fastened, must be prevented from rotating.
- A timber density of ρ_k = 350 kg/m^3 was considered for the calculation process. For higher ρ_k values, the strength on timber side can be converted by the k_{dens} value:

$$k_{dens} = \left(\frac{\rho_k}{350} \right)^{0,5} \quad for\ 350\ kg/m^3 \leq \rho_k \leq 420\ kg/m^3$$

$$k_{dens} = \left(\frac{\rho_k}{350} \right)^{0,5} \quad for\ LVL\ with\ \rho_k \leq 500\ kg/m^3$$

- In the calculation phase, a strength class of C25/30 concrete with thin reinforcement was considered, in the absence of spacing and distances from the edge and minimum thickness indicated in the tables listing the installation parameters of the anchors used.
- The strength values are valid for the calculation hypothesis defined in the table; for boundary conditions different from the ones in the table (e.g. minimum distances from the edge or different concrete thickness), the concrete-side anchors can be verified using MyProject calculation software according to the design requirements.
- The anchors seismic design was carried out in performance category C2, without ductility requirements on anchors (option a2) and elastic design according to EN 1992:2018, with αsus = 0,6. For chemical anchors it is assumed that the annular space between the anchor and the plate hole is filled (α_{gap} = 1).
- For proper installation of screws, it is recommended to refer to the "TIMBER SCREWS AND DECK FASTENING" catalogue.
- The product ETAs for the anchors used in the concrete-side strength calculation are indicated below:
  - VIN-FIX chemical anchor according to ETA-20/0363;
  - HYB-FIX chemical anchor according to ETA-20/1285;
  - EPO-FIX chemical anchor according to ETA-23/0419;
  - SKR screw-in anchor according to ETA-24/0024;
  - AB1 mechanical anchor according to ETA-17/0481 (M12).

INTELLECTUAL PROPERTY

- A WKR model is protected by the Registered Community Design RCD 015032190-0024.

WKR DOUBLE

TENSILE ANGLE BRACKET FOR PREFABRICATED WALLS

PREFABRICATION
The wall plate allows for pre-assembly in the factory, with the possibility of finishes prefabrication. Fastening on site is carried out using the base angle bracket or inter-storey plate and self-drilling metal screws.

TOLERANCES
On-site management is quick and easy. The numerous models of the base angle bracket allow the wall to be installed on a bedding layer, on a base plate or on a reinforced concrete kerb.

PRE-INSTALLATION
The base angle brackets can be pre-installed on the reinforced concrete foundation. Slotted holes for installing the anchors allow management of installation tolerances.

USA, Canada and more design values available online.

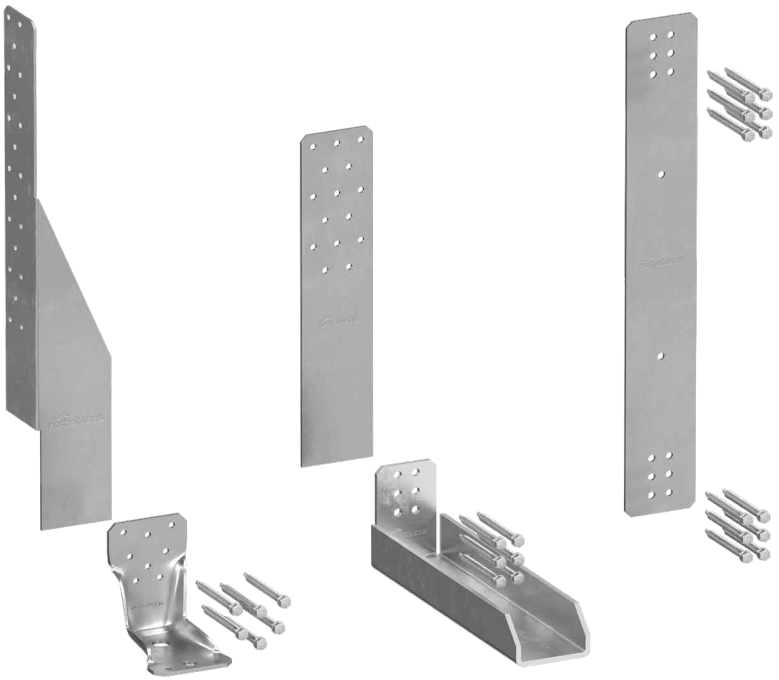

VIDEO

SERVICE CLASS SC1 SC2

MATERIAL

S355 Fe/Zn12c **BASE ANGLE-BRACKETS**: carbon steel S355 + Fe/Zn12c

S350 Z275 **OTHER COMPONENTS**: carbon steel S350GD+Z275

EXTERNAL LOADS

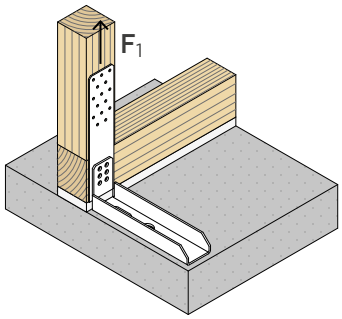

VIDEO
Scan the QR Code and watch the video on our YouTube channel



FIELDS OF USE

Tension joints for prefabricated walls.
Optimised for fastening frame walls.
Timber-to-timber and timber-to-concrete configurations.

Can be applied to:
- solid timber and glulam
- timber frame
- CLT and LVL panels



TIMBER-TO-CONCRETE TOLERANCE

Thanks to the slotted hole for installing the anchor, it is possible to pre-install the bottom plate and subsequently install the walls. The slot allows tolerance management.

TIMBER-TO-TIMBER

The inter-storey plate allows to create the wall-to-wall connection between one storey and the next.

CODES AND DIMENSIONS

WALL PLATE



1

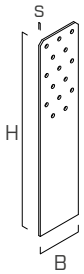

2

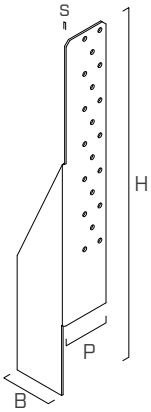

3

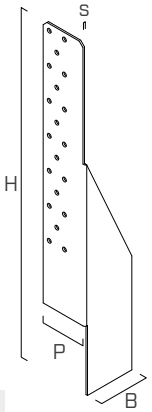

4

	CODE	B [mm]	P [mm]	H [mm]	s [mm]	*B [in]*	*P [in]*	*H [in]*	*s [in]*	n_V Ø5 *n_V Ø0.20* [pcs]			pcs
1	**WKRD40**	40	-	275	2	*1 9/16*	*-*	*10 7/8*	*0.08*	8	●	-	10
2	**WKRD60**	60	-	265	2,5	*2 3/8*	*-*	*10 7/16*	*0.10*	15	●	-	10
3	**WKRD60L**	62	55	403	2	*2 7/16*	*2 3/16*	*15 7/8*	*0.08*	20	●	-	10
4	**WKRD60R**	62	55	403	2	*2 7/16*	*2 3/16*	*15 7/8*	*0.08*	20	●	-	10

INTER-STOREY PLATE



5

	CODE	B [mm]	H [mm]	s [mm]	*B [in]*	*H [in]*	*s [in]*	n_V Ø6 *n_V Ø0.24* [pcs]	pcs
5	**WKRD60T**	60	410	2,5	*2 3/8*	*16 1/8*	*0.10*	12	10

BASE ANGLE BRACKET

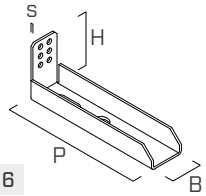

6

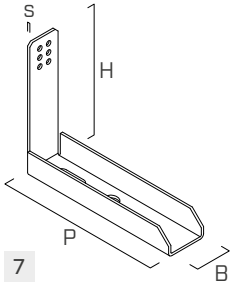

7

	CODE	B [mm]	P [mm]	H [mm]	s [mm]	*B [in]*	*P [in]*	*H [in]*	*s [in]*	n_V Ø6 *n_V Ø0.24* [pcs]	n_H Ø23 *n_H Ø0.91* [pcs]	n_H - $Ø_H$ [pcs]			pcs
6	**WKRD80C**	62	255	80	4	*2 7/16*	*10 1/16*	*3 1/8*	*0.16*	6	1	1 - Ø18 x 30 *1 - Ø0.71 x 1.18*	-	●	10
7	**WKRD180C**	62	255	180	4	*2 7/16*	*10 1/16*	*7 1/8*	*0.16*	6	1	1 - Ø18 x 30 *1 - Ø0.71 x 1.18*	-	●	10

BASE ANGLE BRACKET

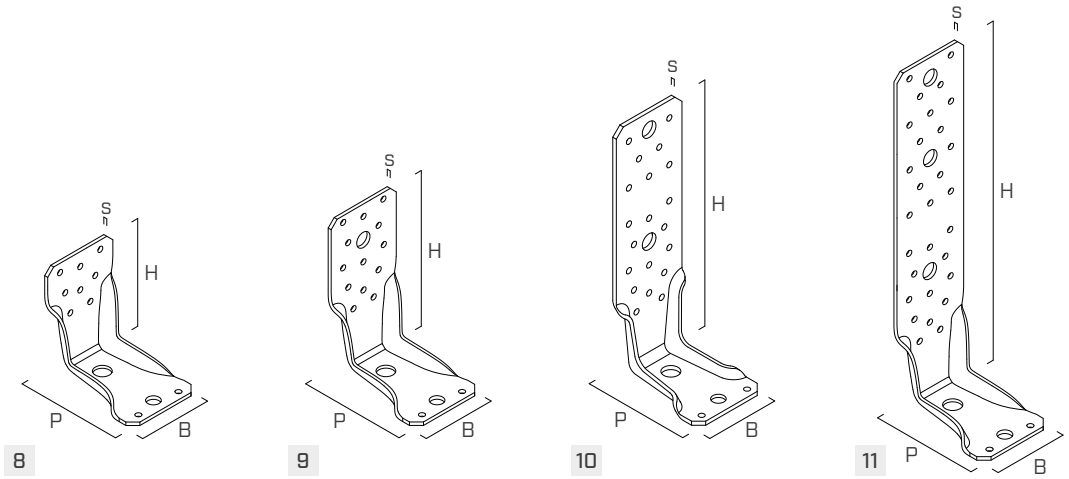

8 9 10 11

	CODE	B [mm]	P [mm]	H [mm]	s [mm]	*B [in]*	*P [in]*	*H [in]*	*s [in]*	n_V Ø5 *n_V Ø0.20* [pcs]	n_H Ø14 *n_H Ø0.56* [pcs]			pcs
8	**WKR9530**	65	85	95	3	*2 9/16*	*3 3/8*	*3 3/4*	*3*	8	1	-	●	25
9	**WKR13535**	65	85	135	3,5	*2 9/16*	*3 3/8*	*5 5/16*	*3.5*	13	1	-	●	25
10	**WKR21535**	65	85	215	3,5	*2 9/16*	*3 3/8*	*8 7/16*	*3.5*	20	1	-	●	25
11	**WKR28535**	65	85	287	3,5	*2 9/16*	*3 3/8*	*11 5/16*	*3.5*	29	1	-	●	25

SELF-DRILLING SCREW FOR STEEL

CODE	d_1 [mm]	SW [mm]	L [mm]	*d_1 [in]*	*L [in]*	pcs
WKRDSCREW	6,3	SW 10	50	*0.25*	*1 15/16*	100

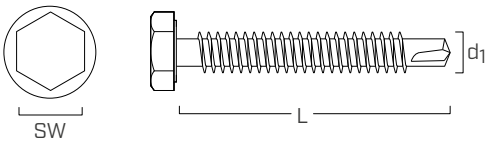

FASTENERS

type	description		d [mm]	support	page
LBA	high bond nail		4		570
LBS	round head screw		5		571
AB1	CE1 expansion anchor		12-16		536
SKR	screw-in anchor		M12-M16		528
VIN-FIX	vinyl ester chemical anchor		M12-M16-M20		545
HYB-FIX	epoxy chemical anchor		M12-M16-M20		552
EPO-FIX	hybrid chemical anchor		M12-M16-M20		557

FASTENING PATTERNS AND STRUCTURAL VALUES F_1

WALL-ANGLE BRACKET BASE PLATE COUPLING

WKRD40

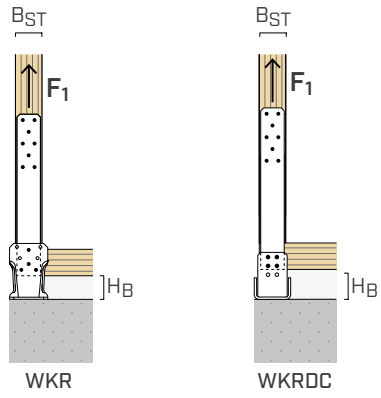

WKRD60

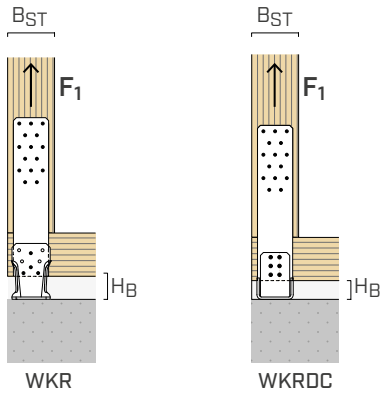

WKRD60L/R

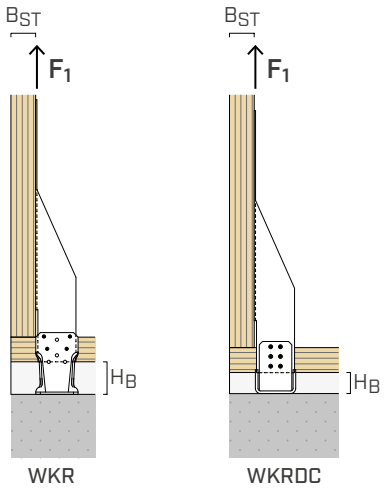

wall plate	basic angle bracket	fasteners		H_B		$B_{ST,\,min}$	$R_{1,k,max}$ (*)
		steel-to-timber LBA Ø4-LBS Ø5 [pcs]	steel-to-steel WKRDSCREW Ø6,3 [pcs]	min [mm]	max [mm]	[mm]	[kN]
WKRD40	WKR9530	8	4	0	40	45	20,0
	WKR21535	8	4	40	114		
	WKR28535	8	4	112	210		
	WKRD80C	8	4	0	47		
	WKRD180C	8	4	0	147		
WKRD60	WKR9530	15	4	0	40	80	26,0
	WKR13535	15	4	0	74		
	WKR21535	15	4	70	170		
	WKR28535	15	4	142	230		
	WKRD80C	15	6	0	32		40,0
	WKRD180C	15	6	30	132		
WKRD60L WKRD60R	WKR9530	20	4	0	40	38	26,0
	WKR13535	20	4	0	74		
	WKR21535	20	4	70	150		
	WKR28535	20	4	120	210		
	WKRD80C	20	6	0	32		
	WKRD180C	20	6	20	132		

(*) $R_{1,k,max}$ is a preliminary strength value. See www.rothoblaas.com for the complete technical data sheet.

GENERAL PRINCIPLES

- Characteristic values according to EN 1995:2014.
- Design values can be obtained from characteristic values as follows:

$$R_d = \frac{R_{k\ timber} \cdot k_{mod}}{\gamma_M}$$

The coefficients k_{mod}, yM should be taken according to the current regulations used for the calculation.

- A timber density of ρ_k = 350 kg/m^3 was considered for the calculation process.
- Dimensioning and verification of the timber elements must be carried out separately.

PLATE COUPLING FOR INTER-STOREY WALL-PLATE

WKRD40 - WKRD60T

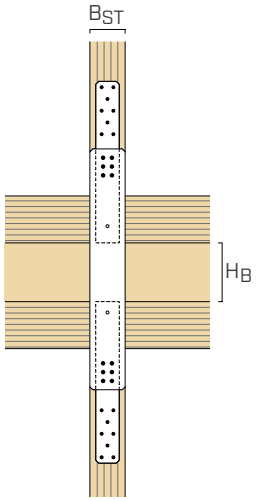

WKRD60 - WKRD60T

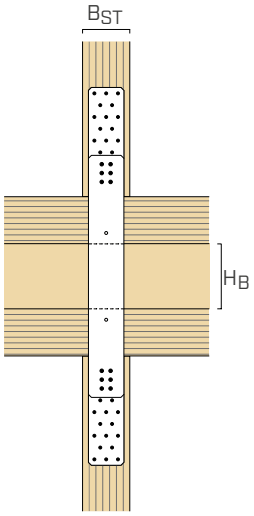

WKRD60L/R - WKRD60T

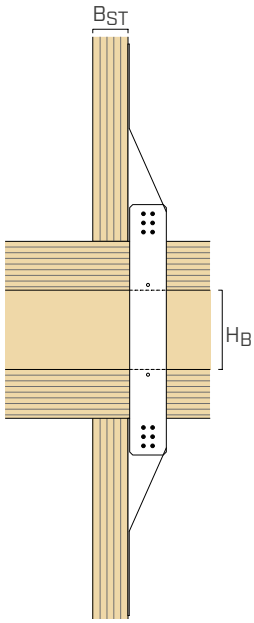

wall plate	inter-storey plate	fasteners		H_B		$B_{ST,\,min}$	$R_{1,k,max}$ (*)
		steel-to-timber LBA Ø4-LBS Ø5	steel-to-steel WKRDSCREW Ø6,3	min	max		
		[pcs]	[pcs]	[mm]	[mm]	[mm]	[kN]
WKRD40	**WKRD60T**	8+8	4+4	50	320	45	**20,0**
WKRD60	**WKRD60T**	15+15	6+6	110	300	80	**40,0**
WKRD60L WKRD60R	**WKRD60T**	20+20	6+6	120	300	38	**26,0**

(*) $R_{1,k,max}$ is a preliminary strength value. See www.rothoblaas.com for the complete technical data sheet.

INSTALLATION

MINIMUM DISTANCES

TIMBER			nails LBA Ø4	screws LBS Ø5
C/GL	$a_{4,c}$	[mm]	≥ 12	≥ 25
	$a_{3,t}$	[mm]	≥ 60	≥ 75

C/GL: minimum distances for solid timber or glulam consistent with EN 1995:2014 according to ETA considering a timber density $\rho_k \leq 420$ kg/m^3.

WKRD40

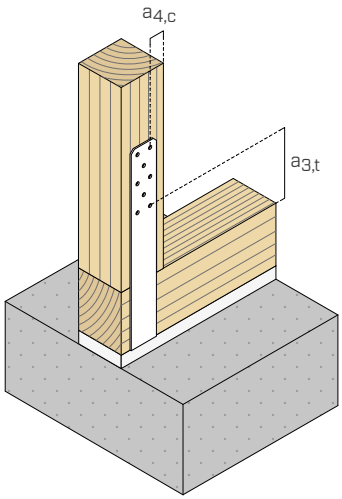

WKRD60

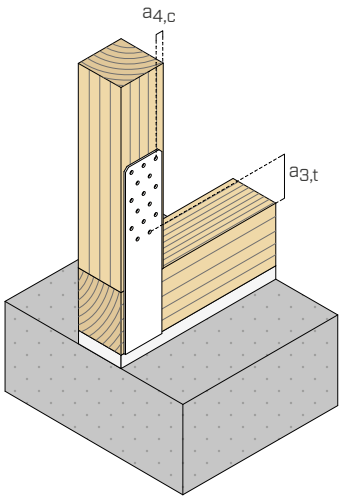

WKRD60L/R

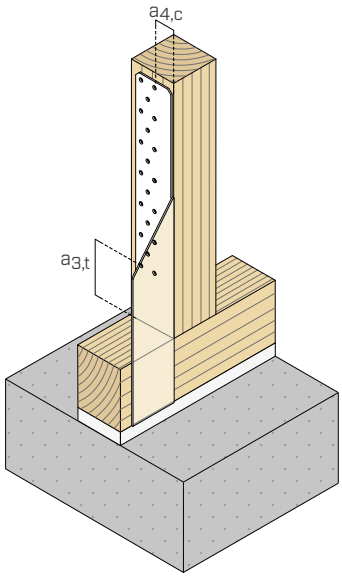

INSTALLATION

INSTALLATION OF WKRD80C AND WKRD180C BASE ANGLE BRACKETS

Frame walls can be supplied with different levels of prefabrication. Depending on the presence and thickness of the interior finish, different installation methods are possible for the WKRD80C and WKRD180C base angle brackets, which provide slotted holes at the floor connection.

INSTALLATION OF BASE ANGLE BRACKETS PRIOR TO WALL INSTALLATION

The angle brackets can be pre-installed on the foundation in order to speed up the installation and fastening of the walls. In this configuration, it is advisable to install the anchor in the slotted hole, which then allows any installation tolerances to be compensated for.

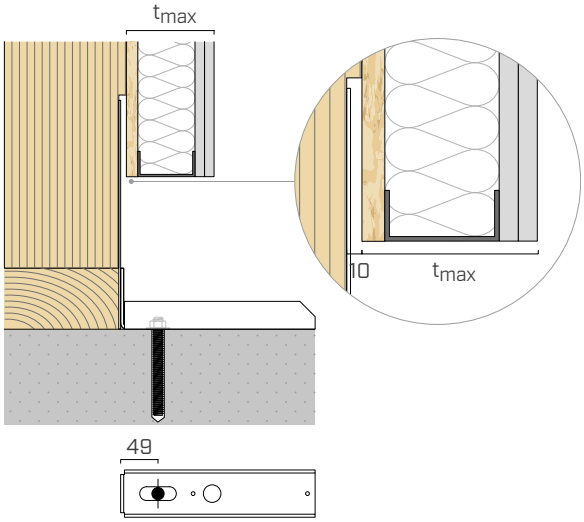

Example: pre-installed M16 anchor in central position for wall with prefabricated internal finish (without thickness limitation).

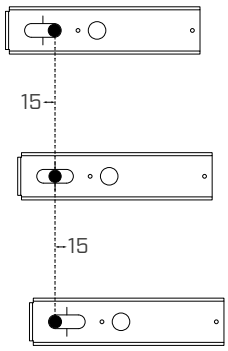

The presence of the slotted hole makes it possible to compensate for an installation tolerance of ± 15 mm after wall installation. After installation, simply apply the tightening torque required to fully anchor the connection to the ground.

INSTALLATION OF BASE ANGLE BRACKETS AFTER WALL INSTALLATION

The angle brackets can be installed after the walls have been installed. In this case, there are two possible ways of fastening them to the ground:

anchor choice		
t_{max} [mm]	IN	OUT
20	M12-M16	M20
80	-	M20

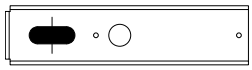

anchor positioned in the internal hole **(IN)**

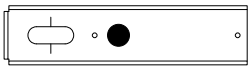

anchor positioned in the outer hole **(OUT)**

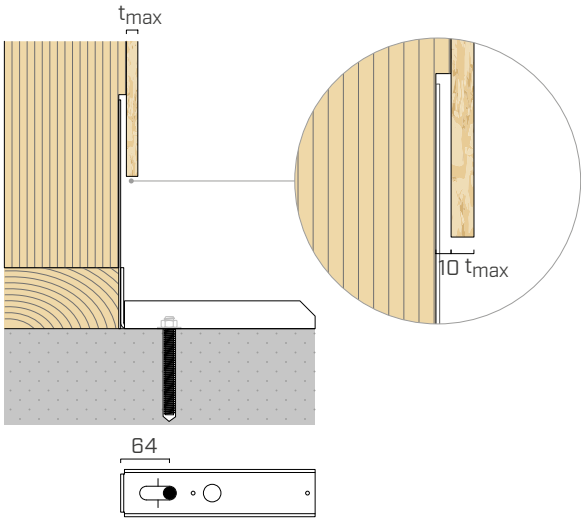

Example: post-installed M16 anchor for prefabricated wall with single OSB panel.

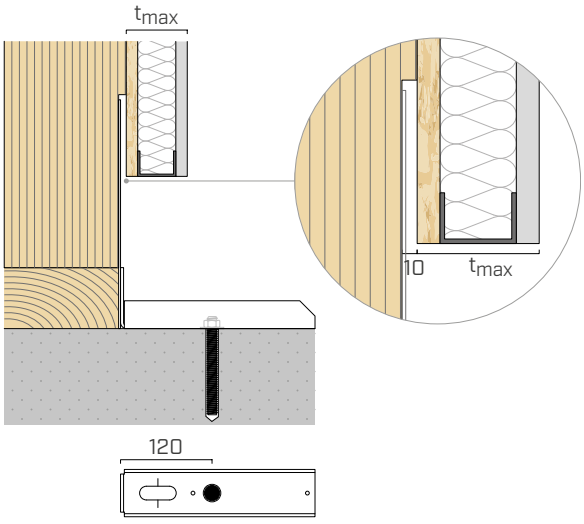

Example: post-installed M20 anchor for prefabricated wall with internal counter wall.



WHT

ANGLE BRACKET FOR TENSILE LOADS

DESIGN REGISTERED

CE ETA-23/0813

NEW VERSION
The classic Rothoblaas hold-down in an optimised version. Reducing the number of fasteners and modifying steel thickness has led to more efficient fastening without sacrificing performance.

COMPLETE RANGE
Available in 5 sizes to meet all static or seismic performance requirements, for CLT, LVL or timber frame walls.

FREEDOM OF FASTENING
They can be fastened with LBA nails, LBS screws or LBS HARDWOOD in different lengths. Capacity design is made possible by the wide choice of fastenings and partial nailing.

TIMBER FRAME
The new NARROW PATTERN nailing allow installation on frame walls with reduced studs widths (60 mm).

SERVICE CLASS	SC1 SC2
MATERIAL	
S355 Fe/Zn12c	**WHT**: S355 + Fe/Zn12c carbon steel
S275 Fe/Zn12c	**WHT WASHER**: S275 + Fe/Zn12c carbon steel

EXTERNAL LOADS

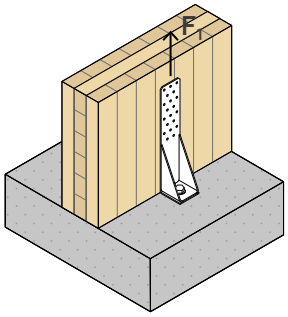

USA, Canada and more design values available online.

IMPROVED NEW! PERFORMANCES



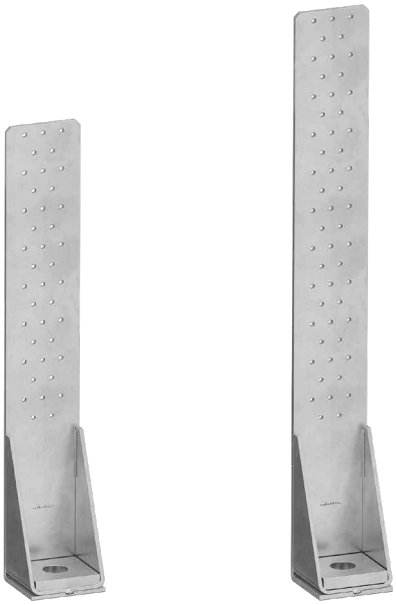



FIELDS OF USE

Tensile joints for timber walls.
Suitable for walls subject to high stress.
Timber-to-timber, timber-to-concrete and timber-to-steel configurations.

Can be applied to:
- solid timber and glulam
- timber frame
- CLT and LVL panels



HYBRID STRUCTURES

Ideal for tensile connections between timber floors and bracing core in hybrid timber-to-concrete buildings.

RAISED INSTALLATION

The certification with a gap between angle bracket and support allows special requirements such as reinforced concrete kerbs to be supported.

CODES AND DIMENSIONS

WHT ANGLE BRACKET

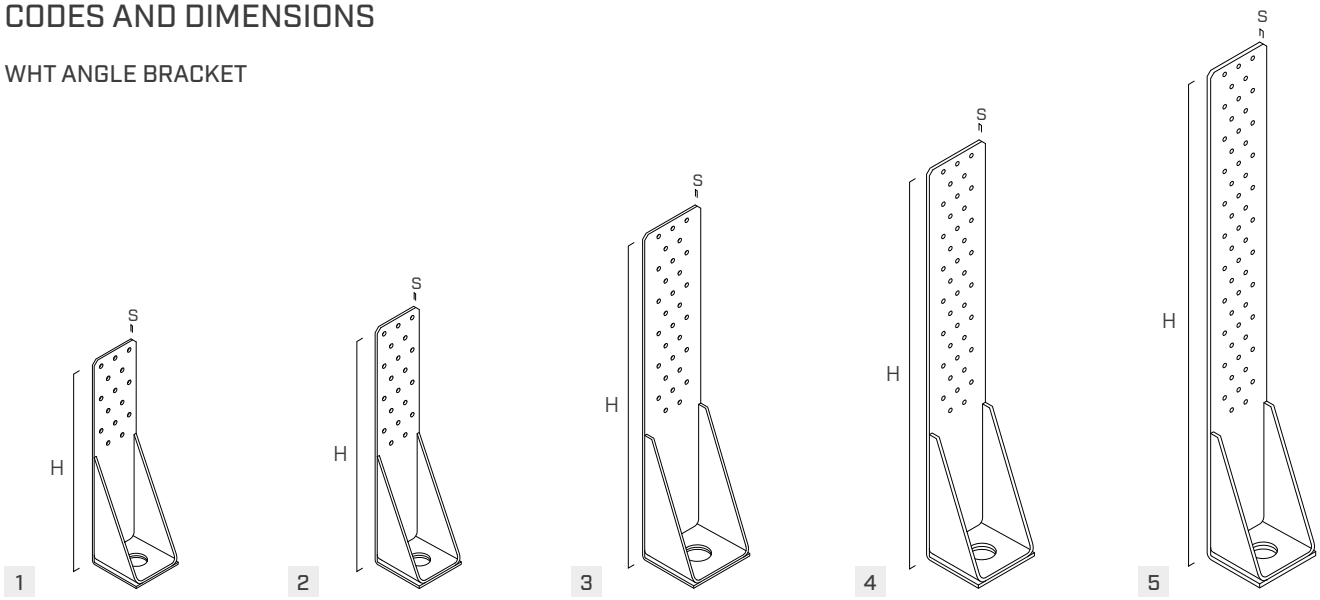

	CODE	H [mm]	s [mm]	n_V Ø5 [pcs]	hole [mm]	*H [in]*	*s [in]*	*n_V Ø.20 [pcs]*	*hole [in]*	pcs
1	**WHT15**	250	2,5	15	Ø23	*10*	*0.10*	*15*	*Ø0.91*	20
2	**WHT20**	290	3	20	Ø23	*11 7/16*	*0.12*	*20*	*Ø0.91*	20
3	**WHT30**	400	3	30	Ø29	*15 3/4*	*0.12*	*30*	*Ø1.14*	10
4	**WHT40**	480	4	40	Ø29	*19*	*0.16*	*40*	*Ø1.14*	10
5	**WHT55**	600	5	55	Ø29	*23 5/8*	*0.20*	*55*	*Ø1.14*	1

WHTW WASHER

	CODE	hole [mm]	Ø [mm]	s [mm]	*hole [in]*	*s [in]*	WHT15	WHT20	WHT30	WHT40	WHT55	pcs
1	**WHTW6016**	Ø18	M16	6	*Ø0.71*	*0.24*	●	●	-	-	-	1
2	**WHTW6020**	Ø22	M20	6	*Ø0.87*	*0.24*	●	●	-	-	-	1
3	**WHTW8020**	Ø22	M20	10	*Ø0.87*	*0.39*	-	-	●	●	-	1
4	**WHTW8024**	Ø26	M24	10	*Ø1.02*	*0.39*	-	-	●	●	-	1
5	**WHTW8024L**	Ø26	M24	12	*Ø1.02*	*0.47*	-	-	-	-	●	1

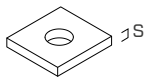

ACOUSTIC PROFILE | XYLOFON WASHER

CODE		hole [mm]	P [mm]	B [mm]	s [mm]	*hole [in]*	*P [in]*	*B [in]*	*s [in]*	pcs
XYLW806060	WHT15 WHT20	Ø23	60	60	6	*Ø0.91*	*2 3/8*	*2 3/8*	*0.24*	10
XYLW808080	WHT30 WHT40 WHT55	Ø27	80	80	6	*Ø1.06*	*3 1/8*	*3 1/8*	*0.24*	10

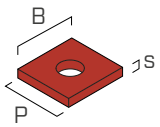

FASTENERS

type	description		d [mm]	support	page
LBA	high bond nail		4		570
LBS	round head screw		5		571
LBS HARDWOOD	round head screw on hardwoods		5		572
VIN-FIX	vinyl ester chemical anchor		M16-M20-M24		545
HYB-FIX	hybrid chemical anchor		M16-M20-M24		552
EPO-FIX	epoxy chemical anchor		M16-M20-M24		557
KOS	hexagonal head bolt		M16-M20-M24		168

GEOMETRY

WHT			WHT15	WHT20	WHT30	WHT40	WHT55
Height	**H**	[mm]	250	290	400	480	600
Base	**B**	[mm]	60	60	80	80	80
Depth	**P**	[mm]	62,5	63	73	74	75
Vertical flange thickness	**s**	[mm]	2,5	3	3	4	5
Hole position in timber	**c**	[mm]	140	140	170	170	170
Hole position in concrete	**m**	[mm]	32,5	33	38	39	40
Flange holes	**Ø$_1$**	[mm]	5	5	5	5	5
Base hole	**Ø$_2$**	[mm]	23	23	29	29	29

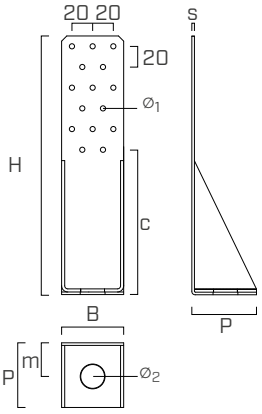

WHTW WASHER			WHTW6016	WHTW6020	WHTW8020	WHTW8024	WHTW8024L
Base	**B$_R$**	[mm]	50	50	70	70	70
Depth	**P$_R$**	[mm]	56	56	66	66	66
Thickness	**s$_R$**	[mm]	6	6	10	10	12
Washer hole	**Ø$_3$**	[mm]	18	22	22	26	26

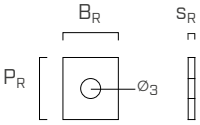

INSTALLATION

MAXIMUM HEIGHT OF THE INTERMEDIATE H$_B$ LAYER

CODE	H$_{B\,max}$ [mm]			
	CLT		C/GL	
	nails	screws	nails	screws
	LBA Ø4	LBS Ø5	LBA Ø4	LBS Ø5
WHT15	100	110	80	65
WHT20	100	110	80	65
WHT30	130	140	110	95
WHT40	130	140	110	95
WHT55	130	140	110	95

The height of the H$_B$ intermediate layer (levelling grout, sill or timber platform beam) is determined by taking into account the regulatory requirements for fastenings on timber, shown in the minimum distance table.

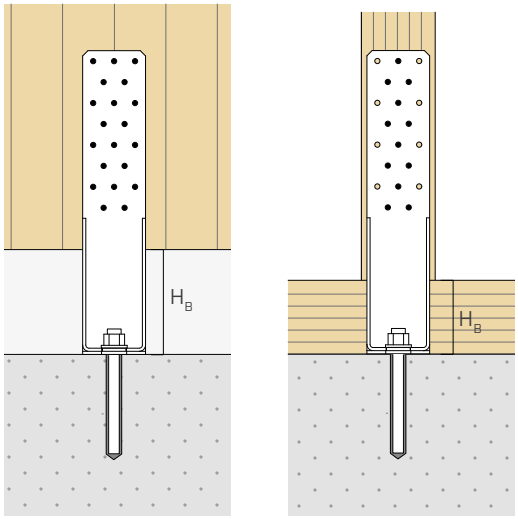

MINIMUM DISTANCES

TIMBER minimum distances			nails LBA Ø4	screws LBS Ø5
C/GL	**a$_{4,c}$**	[mm]	≥ 20	≥ 25
	a$_{3,t}$	[mm]	≥ 60	≥ 75
CLT	**a$_{4,c}$**	[mm]	≥ 12	≥ 12,5
	a$_{3,t}$	[mm]	≥ 40	≥ 30

- C/GL: minimum distances for solid timber or glulam consistent with EN 1995:2014 according to ETA considering a timber density $\rho_k \leq 420$ kg/m^3
- CLT: minimum distances for Cross Laminated Timber according to ÖNORM EN 1995:2014 (Annex K) for nails and ETA-11/0030 for screws

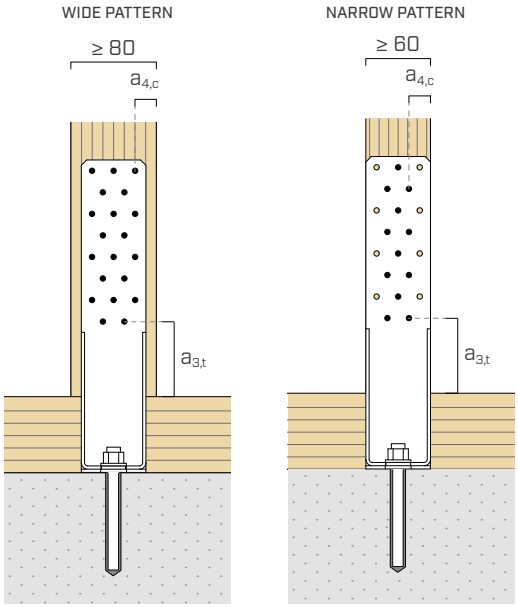

INSTALLATION

INSTALLATION WITH GAP

Installation of the angle bracket raised above the bearing surface is possible. This makes it possible, for example, to install the angle bracket even with an intermediate layer H_B (bedding grout, base plate or concrete kerb) greater than $H_{B\ max}$ or to manage site tolerances such as the anchor hole being located away from the wall or studs.
In case of installation with gap, it is recommended to install a lock nut below the horizontal flange, to prevent that excessive tightening of the nut may stress the connection.

without GAP

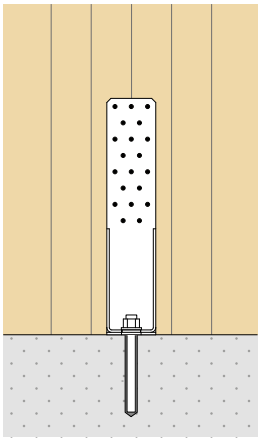

with GAP

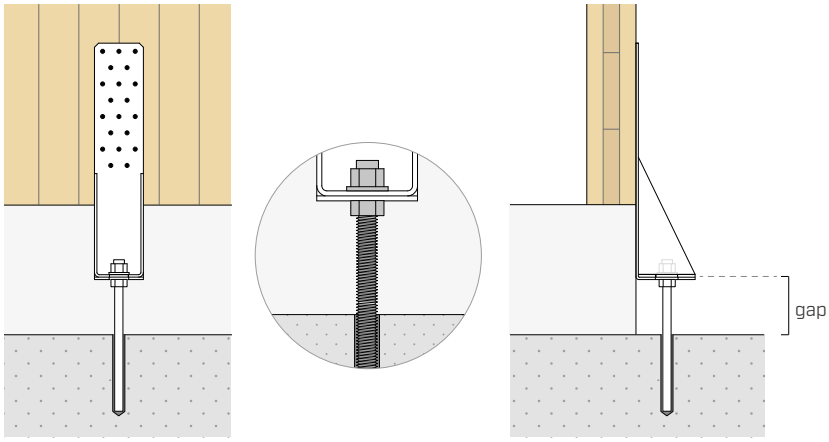

FASTENING PATTERNS

It is possible to install the angle bracket in two specific patterns:
- **wide pattern**: installation of connectors on all columns of the vertical flange;
- **narrow pattern**: installation with narrow nailing, leaving the outermost columns free.

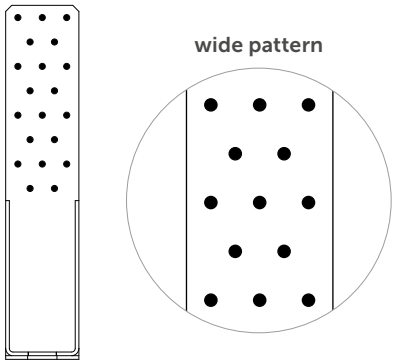

WHT20: total fastening in wide pattern configuration

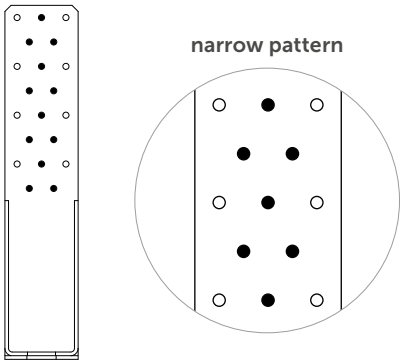

WHT20: total fastening in narrow pattern configuration

Full or partial fastening patterns can both be adopted. In the case of installation with partial fastening, the number of connectors can be varied, guaranteeing the minimum quantity $\mathbf{n_{min}}$ shown in the table below. The connectors must be installed starting from the bottom holes.

CODE	n_{min} [pcs.]	
	wide pattern	narrow pattern
WHT15	10	6
WHT20	15	9
WHT30	20	12
WHT40	25	15
WHT55	30	18

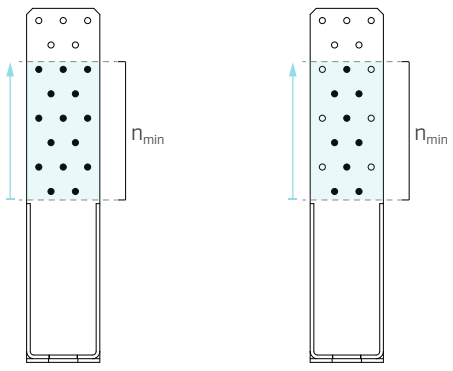

WHT20: partial fastening in wide pattern and narrow pattern respectively, with installation of the minimum number of connectors n_{min}.

STRUCTURAL VALUES | TIMBER-TO-CONCRETE | F_1

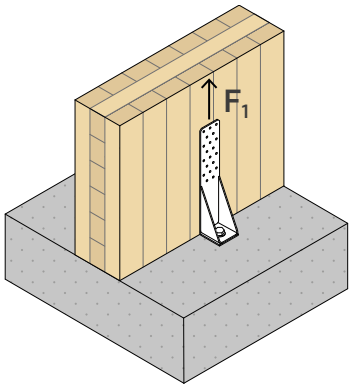

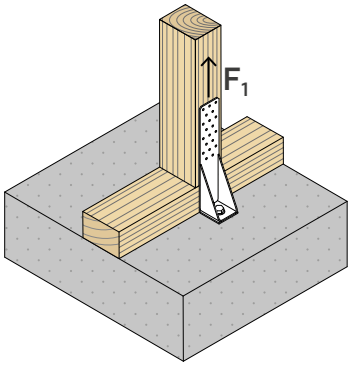

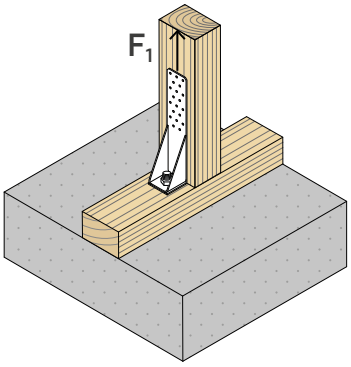

STRENGTH ON TIMBER SIDE | WIDE PATTERN | total fastening

	TIMBER				STEEL				
	fastening holes Ø5				no washer	washer		no washer	washer
CODE	type	Ø x L [mm]	n_V [pcs]	$R_{1,k\ timber}$ [kN]	$R_{1,k\ steel}$ [kN]	$R_{1,k\ steel}$ [kN]	γ_{steel}	$K_{1,ser}$ [N/mm]	$K_{1,ser}$ [N/mm]
WHT15	LBA	Ø4 x 60	15	36,8	**30,0**	**40,0**	γ_{M0}	5000	5880
	LBS	Ø5 x 70		35,6					
	LBSH	Ø5 x 50		35,3					
WHT20	LBA	Ø4 x 60	20	48,1	**40,0**	**50,0**	γ_{M0}	6667	7980
	LBS	Ø5 x 70		48,3					
	LBSH	Ø5 x 50		47,9					
WHT30	LBA	Ø4 x 60	30	76,4	-	**70,0**	γ_{M0}	-	11667
	LBS	Ø5 x 70		73,7					
	LBSH	Ø5 x 50		73,1					
WHT40	LBA	Ø4 x 60	40	101,9	-	**90,0**	γ_{M0}	-	15000
	LBS	Ø5 x 70		96,5					
	LBSH	Ø5 x 50		95,8					
WHT55	LBA	Ø4 x 60	55	141,5	-	**120,0**	γ_{M0}	-	20000
	LBS	Ø5 x 70		132,1					
	LBSH	Ø5 x 50		131,0					

STRENGTH ON TIMBER SIDE | NARROW PATTERN | total fastening

	TIMBER				STEEL			
	fastening holes Ø5				no washer	washer		
CODE	type	Ø x L [mm]	n_V [pcs]	$R_{1,k\ timber}$ [kN]	$R_{1,k\ steel}$ [kN]	$R_{1,k\ steel}$ [kN]	γ_{steel}	$K_{1,ser}$ [N/mm]
WHT15	LBA	Ø4 x 60	9	22,6	**30,0**	-	γ_{M0}	3360
	LBS	Ø5 x 70		20,3				
	LBSH	Ø5 x 50		20,2				
WHT20	LBA	Ø4 x 60	12	28,3	**40,0**	-	γ_{M0}	4620
	LBS	Ø5 x 70		27,9				
	LBSH	Ø5 x 50		27,7				
WHT30	LBA	Ø4 x 60	18	45,3	-	**70,0**	γ_{M0}	7140
	LBS	Ø5 x 70		43.2				
	LBSH	Ø5 x 50		42,8				
WHT40	LBA	Ø4 x 60	24	59,4	-	**90,0**	γ_{M0}	9240
	LBS	Ø5 x 70		55,9				
	LBSH	Ø5 x 50		55,4				
WHT55	LBA	Ø4 x 60	33	84,9	-	**120,0**	γ_{M0}	13020
	LBS	Ø5 x 70		78,7				
	LBSH	Ø5 x 50		78,1				

STRUCTURAL VALUES | TIMBER-TO-CONCRETE | F_1

STRENGTH ON TIMBER SIDE | PARTIAL FASTENING

For partial fastening patterns, the values of $R_{1,k\ timber}$ are obtained by multiplying the characteristic strength of the individual connector $R_{v,k}$ by the relative $\mathbf{n_{eq}}$ shown in the table below, where n represents the total number of nails expected to be installed.

CODE	wide pattern n_{eq}		narrow pattern n_{eq}	
	LBA	LBS / LBSH	LBA	LBS / LBSH
WHT15	n-2	n-1	n-1	n-1
WHT20	n-3	n-1	n-2	n-1
WHT30	n-3	n-1	n-2	n-1
WHT40	n-4	n-2	n-3	n-2
WHT55	n-5	n-3	n-3	n-2

For of R_{vk} values of the connectors, refer to the catalogue "TIMBER SCREWS AND DECK FASTENING" at www.rothoblaas.com.

USE OF ALTERNATIVE FASTENINGS

It is possible to use nails or screws of a shorter length than those proposed.
In this case, the bearing capacity values $R_{1,k\ timber}$ must be multiplied by a reductive factor k_F:

connector length	k_F		
[mm]	LBA Ø4	LBS Ø5	LBSH Ø5
40	0,74	0,79	0,83
50	0,91	0,89	**1,00**
60	**1,00**	0,94	1,08
70	-	**1,00**	1,14
75	1,13	-	-
100	1,30	-	-

CONCRETE STRENGTH

Strength values of some of the possible fastening solutions. For additional solutions, different from those indicated in the table, it is possible to use the My Project software available at www.rothoblaas.com.

CODE	configuration on concrete	fastening holes Ø14		$R_{1,d\ concrete}$	
		type	Ø x L [mm]	no gap [kN]	gap [kN]
WHT15 WHT20 no washer	**uncracked**	VIN-FIX 5.8	M16 x 195	**34,0**	**37,1**
			M16 x 245	**44,7**	**48,8**
			M20 x 245	**55,9**	**61,0**
	cracked	HYB-FIX 5.8	M16 x 195	**45,1**	**49,2**
		HYB-FIX 8.8	M16 x 245	**59,3**	**64,6**
	seismic	EPO-FIX 8.8	M20 x 245	**40,3**	**44,0**
			M20 x 330	**56,7**	**61,8**
WHT15 WHT20	**uncracked**	VIN-FIX 5.8	M16 x 245	**42,6**	**46,5**
			M20 x 245	**53,2**	**58,0**
	cracked	HYB-FIX 8.8	M16 x 195	**43,7**	**47,6**
			M16 x 245	**47,6**	**51,9**
	seismic	EPO-FIX 8.8	M20 x 245	**38,3**	**41,8**
			M20 x 330	**55,7**	**60,7**
WHT30 WHT40	**uncracked**	VIN-FIX 5.8	M20 x 245	**53,2**	**58,0**
		VIN-FIX 5.8	M20 x 330	**73,3**	**79,9**
		HYB-FIX 8.8	M20 x 245	**91,5**	**99,7**
	cracked	HYB-FIX 5.8	M20 x 245	**64,0**	**69,8**
		VIN-FIX 5.8	M24 x 330	**89,6**	**97,7**
		EPO-FIX 5.8	M24 x 330	**107,3**	**117,0**
	seismic	EPO-FIX 8.8	M24 x 330	**64,6**	**70,4**
			M24 x 495	**103,4**	**112,7**
WHT55	**uncracked**	HYB-FIX 8.8	M24 x 330	**153,2**	**167,0**
	cracked	EPO-FIX 5.8	M24 x 330	**107,3**	**117,0**
		HYB-FIX 8.8	M24 x 495	**143,4**	**156,3**
	seismic	EPO-FIX 8.8	M24 x 330	**64,6**	**70,4**
			M24 x 495	**103,3**	**112,6**

ANCHORS INSTALLATION PARAMETERS

type of rod Ø x L [mm]		WHT type	type of washer	t_{fix} [mm]	$h_{nom}=h_{ef}$ [mm]	h_1 [mm]	d_0 [mm]	h_{min} [mm]
M16	195	WHT15 / WHT20	WHTW6016	11	160	165	18	200
	245	WHT15 / WHT20	WHTW6016	11	200	205	18	250
M20	245	WHT15 / WHT20	WHTW6020	11	200	205	22	250
	330			11	290	295	22	350
	245	WHT30	WHTW8020	16	200	205	22	250
	330			16	280	285	22	350
	245	WHT40	WHTW8020	16	195	200	22	250
	330			16	275	280	22	350
M24	330	WHT30	WHTW8024	16	280	285	26	350
	330	WHT40 / WHT55	WHTW8024	18	275	280	26	350
	330	WHT55	WHTW8024	21	275	280	26	350
	495	WHT55	WHTW8024L	21	440	445	26	350

Precut INA threaded rod, with nut and washer: see page 562.
MGS threaded rod class 8.8 to be cut to size: see page 174.

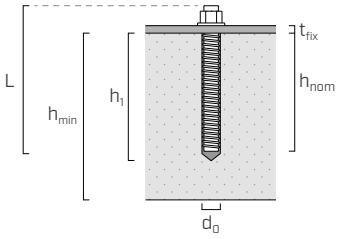

t_{fix}	fastened plate thickness
h_{nom}	nominal anchoring depth
h_{ef}	effective anchoring depth
h_1	minimum hole depth
d_0	hole diameter in the concrete support
h_{min}	concrete minimum thickness

ANCHORS VERIFICATION FOR STRESS LOADING F_1

Fastening elements to the concrete through anchors not listed in the table, shall be verified according to the load acting on the anchors, which can be evaluated through the $k_{t//}$ coefficients. The axial load acting on the anchor can be obtained as follows:

$$F_{bolt//,d} = k_{t//} \cdot F_{1,d}$$

$k_{t//}$ coefficient of eccentricity
$F_{1,d}$ axial load on the WHT angle bracket

The anchor check is satisfied if the design tensile strength, obtained considering the boundary effects, is greater than the design external load: $R_{bolt//,d} \geq F_{bolt//,d}$.

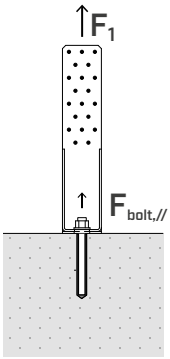

	INSTALLATION WITH GAP	INSTALLATION WITHOUT GAP
CODE	**$k_{t//}$**	**$k_{t//}$**
WHT15	1,00	1,09
WHT20	1,00	1,09
WHT30	1,00	1,09
WHT40	1,00	1,09
WHT55	1,00	1,09

GENERAL PRINCIPLES

- Characteristic values comply with the EN 1995:2014 standard in accordance with ETA-23/0813.
- Design values can be obtained from values in the table as follows:

TOTAL FASTENING

$$R_d = min \left\{ \frac{k_F \cdot R_{k,\,timber} \cdot k_{mod}}{\gamma_M} ; \frac{R_{k,\,steel}}{\gamma_{M0}} ; \frac{R_{d,\,concrete}}{k_{t//}} \right\}$$

PARTIAL FASTENING

$$R_d = min \left\{ \frac{n_{eq} \cdot R_{v,k} \cdot k_{mod}}{\gamma_M} ; \frac{R_{k,\,steel}}{\gamma_{M0}} ; \frac{R_{d,\,concrete}}{k_{t//}} \right\}$$

The coefficients k_{mod}, γ_M and γ_{M0} should be taken according to the current regulations used for the calculation.

- The value of $K_{1,ser}$ for fastenings other than those proposed can be calculated as follows:

$$K_{1,ser} = min \left\{ \frac{n_{eq} \cdot R_{v,k}}{6} ; \frac{R_{k,\,steel}}{6} \right\}$$

- The calculation process used a timber characteristic density of ρ_k = 350 kg/m^3 and a C25/30 concrete strength class with a thin reinforcing layer, where there is no spacing and edge-distance and minimum thickness indicated in the installation parameters tables of the anchors used. The strength values are valid for the calculation hypothesis defined in the table; for boundary conditions different from the ones in the table (e.g. minimum distances from the edge or different concrete thickness), the concrete-side anchors can be verified using MyProject calculation software according to the design requirements.
- Concrete design strength values are supplied for uncracked ($R_{1,d\ uncracked}$), cracked ($R_{1,d\ cracked}$) concrete and in case of seismic verification ($R_{1,d\ seismic}$) for use of chemical anchor with threaded rod in steel class 5.8 and 8.8.
- Seismic design in performance category C2, without ductility requirements on anchors (option a2) and elastic design according to EN 1992:2018.
- Dimensioning and verification of timber and concrete elements must be carried out separately.
- For applications on CLT (Cross Laminated Timber) it is recommended to use nails/screws of adequate length to ensure that the fixing depth involves a sufficient timber thickness to prevent fragile failure for group effects.

INTELLECTUAL PROPERTY

- WHT hold-downs are protected by the following Registered Community Designs: RCD 015032190-0019 | RCD 015032190-0020 | RCD 015032190-0021 | RCD 015032190-0022 | RCD 015032190-0023.

WZU

ANGLE BRACKET FOR TENSILE LOADS

CE
ETA

COMPLETE RANGE
Available in different thicknesses. The capacity can also be increased with the inclusion of the washer, according to the loads.

CERTIFIED STRENGTH
Tensile strength values are certified by the CE marking in accordance with the ETA.

TIMBER FRAME
Ideal for the fastening of studs in timber frame structures to concrete.

SERVICE CLASS SC1 SC2

MATERIAL

S250 Z275 **WZU**: S250GD + Z275 carbon steel

S235 Fe/Zn12c **WZUW**: S235 + Fe/Zn12c carbon steel

EXTERNAL LOADS

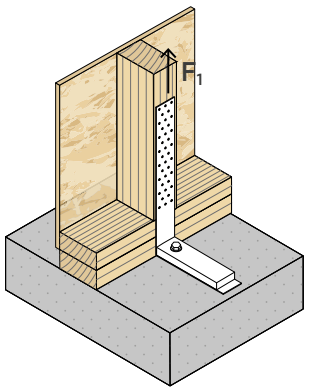

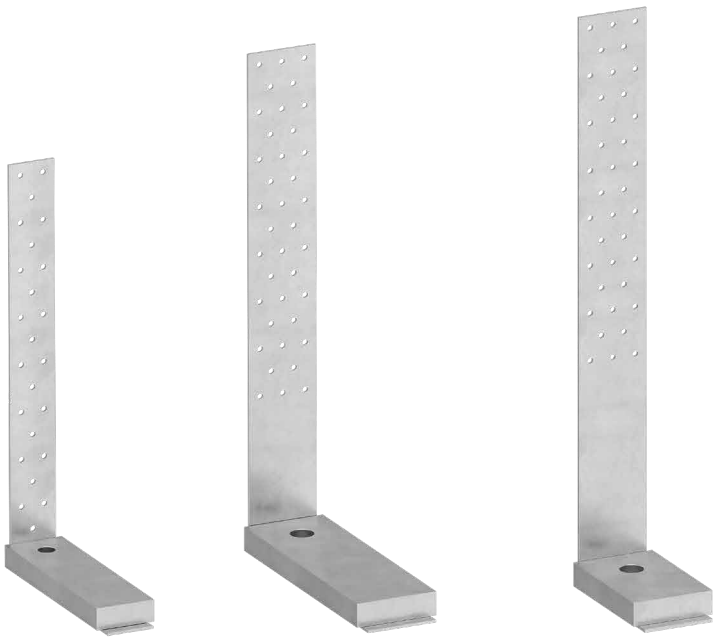

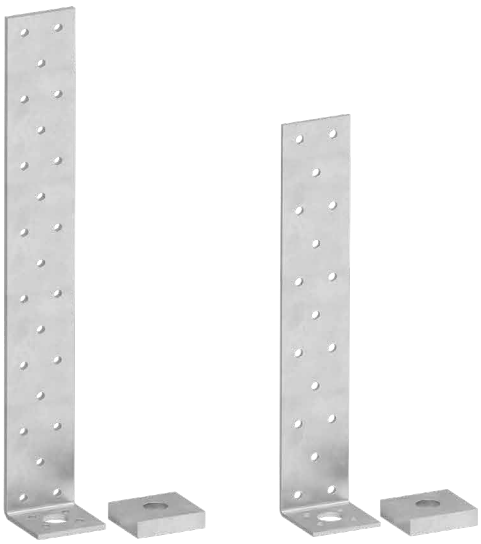



FIELDS OF USE

Tension joints with small to medium stress.
Optimised for fastening frame walls.
Timber-to-timber, timber-to-concrete and timber-to-steel configurations.

Can be applied to:
- solid timber and glulam
- timber frame
- CLT and LVL panels





TIMBER FRAME

The reduced width of the vertical flange (40 mm) facilitates installation on the studs of the frame panels.

TENSION

The washer that is included in the WZU STRONG bracket packages, guarantees excellent tensile strength performance. Values are certified according to ETA.

CODES AND DIMENSIONS

WZU 90 / 155

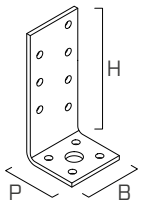

1

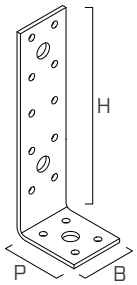

2

	CODE	B [mm]	P [mm]	H [mm]	s [mm]	*B [in]*	*P [in]*	*H [in]*	*s [in]*	n Ø5 *n Ø0.20* [pcs]	n Ø11 *n Ø0.44* [pcs]	n Ø13 *n Ø0.52* [pcs]			pcs
1	**WZU090**	40	35	90	3,0	*1 9/16*	*1 3/8*	*3 1/2*	*0.12*	11	1	-	●	●	100
2	**WZU155**	40	50	155	3,0	*1 9/16*	*1 15/16*	*6 1/8*	*0.12*	14	-	3	●	●	100

WZU 200 / 300 / 400

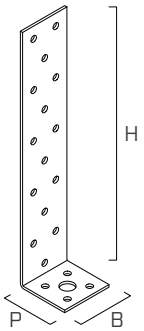

1

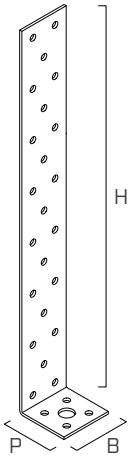

2

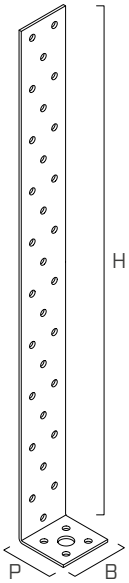

3

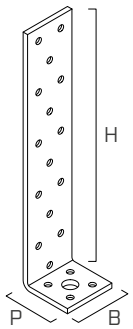

4

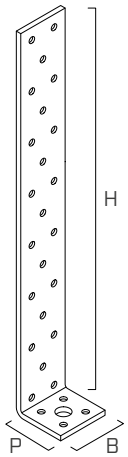

5

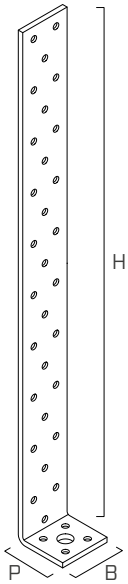

6

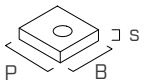

7

	CODE	B [mm]	P [mm]	H [mm]	s [mm]	*B [in]*	*P [in]*	*H [in]*	*s [in]*	n Ø5 *n Ø0.20* [pcs]	n Ø14 *n Ø0.44* [pcs]			pcs
1	**WZU2002**	40	40	200	2,0	*1 9/16*	*1 9/16*	*8*	*0.08*	19	1	●	●	100
2	**WZU3002**	40	40	300	2,0	*1 9/16*	*1 9/16*	*11 3/4*	*0.08*	27	1	●	●	50
3	**WZU4002**	40	40	400	2,0	*1 9/16*	*1 9/16*	*15 3/4*	*0.08*	34	1	●	●	50
4	**WZU2004**	40	40	200	4,0	*1 9/16*	*1 9/16*	*8*	*0.16*	19	1	●	●	50
5	**WZU3004**	40	40	300	4,0	*1 9/16*	*1 9/16*	*11 3/4*	*0.16*	27	1	●	●	50
6	**WZU4004**	40	40	400	4,0	*1 9/16*	*1 9/16*	*15 3/4*	*0.16*	34	1	●	●	25
7	**WZUW**	40	43	-	10	*1 9/16*	*1 11/16*	-	*0.39*	-	1	●	●	50

CODES AND DIMENSIONS

WZU STRONG

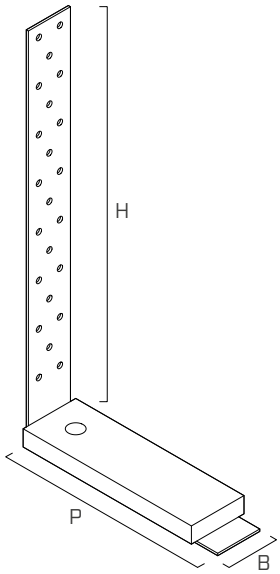

1

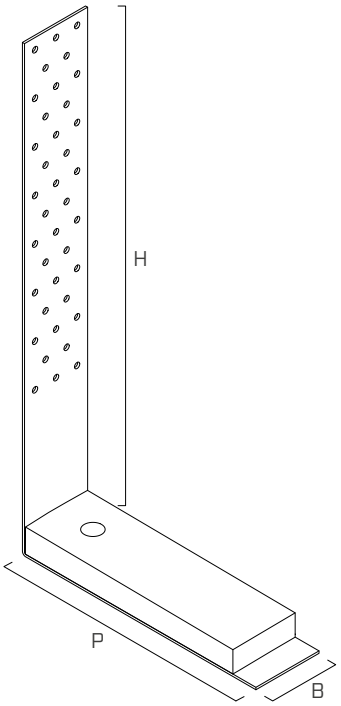

2

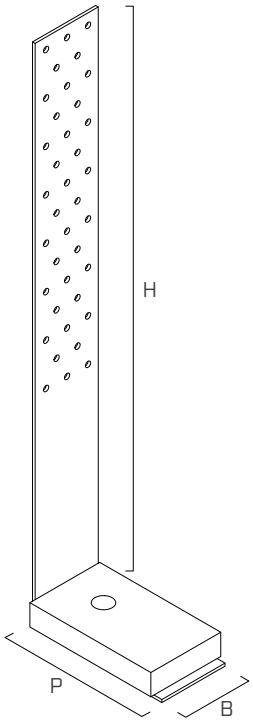

3

	CODE	B [mm] *[in]*	P [mm] *[in]*	H [mm] *[in]*	s [mm] *[in]*	n Ø5 *n Ø.20* [pcs]	n Ø13 *n Ø0.52* [pcs]	n Ø18 *n Ø0.71* [pcs]	n Ø22 *n Ø0.87* [pcs]	washer*			pcs
1	**WZU342**	40 *1 9/16*	182 *7 3/16*	340 *13 3/8*	2,0 *0.08*	23	1	-	-	160 x 50 x 15 Ø12,5 *6 1/4 x 1 15/16 x 9/12 Ø0.49*		●	10
2	**WZU422**	60 *2 3/8*	222 *8 3/4*	420 *16 9/16*	2,0 *0.08*	38	-	1	-	200 x 60 x 20 Ø16,5 *8 x 2 3/8 x 13/16 Ø0.65*		●	10
3	**WZU482**	60 *2 3/8*	123 *4 13/16*	480 *19*	2,5 *0.10*	38	-	-	1	115 x 70 x 20 Ø20,5 *4 1/2 x 2 3/4 x 13/16 Ø0.81*		●	10

*Washer included in the package.

MOUNTING

Fastening to concrete with threaded rods and chemical anchor.

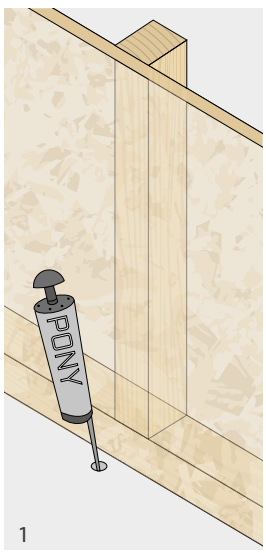

1

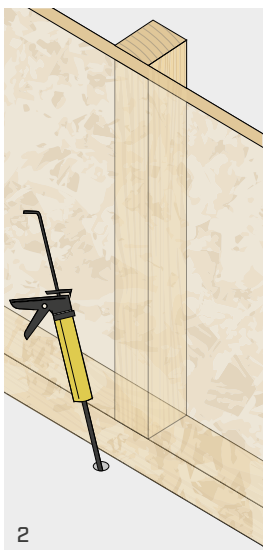

2

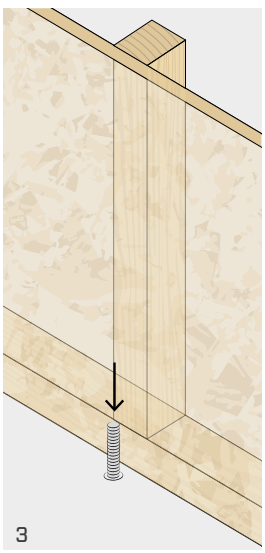

3

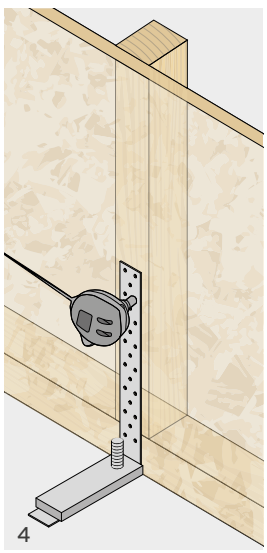

4

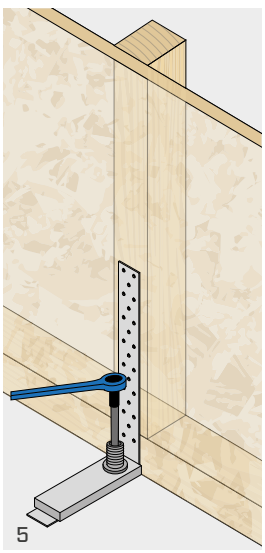

5

STRUCTURAL VALUES | TIMBER-TO-CONCRETE TENSILE JOINT

WZU 200/300/400 WITH WASHER*

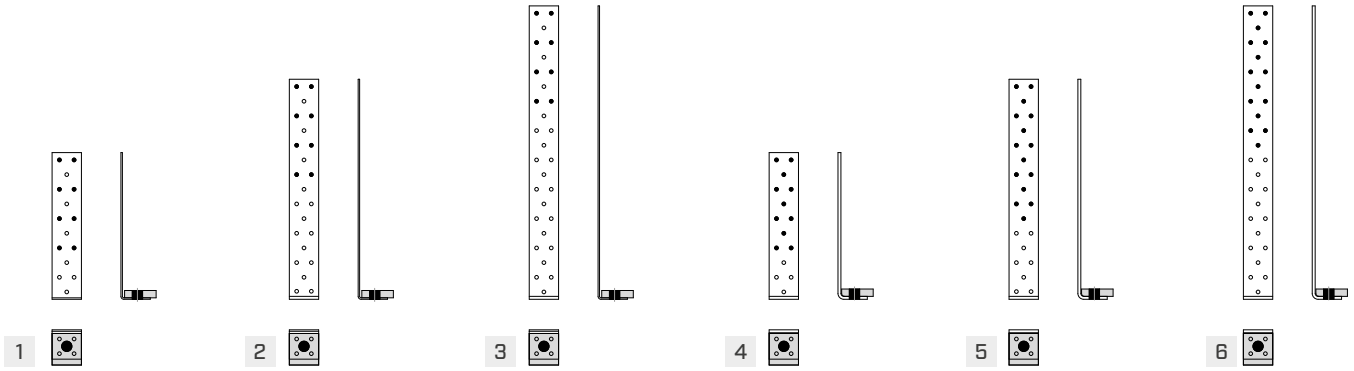

	CODE	fastening holes Ø5			TIMBER	STEEL		CONCRETE	
		type	Ø x L	n_V	$R_{1,k\ timber}$	$R_{1,k\ steel}$		$R_{1,d\ uncracked}$ VIN-FIX[(1)] Ø x L, cl.5.8	
			[mm]	pcs	[kN]	[kN]	γ_{steel}	[mm]	[kN]
1	**WZU2002 + WZUW**	LBA	Ø4 x 40	8	**12,6**	**11,6**	γ_{M0}	M12 x 195	**8,8**
			Ø4 x 60		**15,4**				
		LBS	Ø5 x 40		**12,6**				
			Ø5 x 50		**15,4**				
2	**WZU3002 + WZUW**	LBA	Ø4 x 40	8	**12,6**	**11,6**	γ_{M0}	M12 x 195	**8,8**
			Ø4 x 60		**15,4**				
		LBS	Ø5 x 40		**12,6**				
			Ø5 x 50		**15,4**				
3	**WZU4002 + WZUW**	LBA	Ø4 x 40	8	**12,6**	**11,6**	γ_{M0}	M12 x 195	**8,8**
			Ø4 x 60		**15,4**				
		LBS	Ø5 x 40		**12,6**				
			Ø5 x 50		**15,4**				
4	**WZU2004 + WZUW**	LBA	Ø4 x 40	11	**17,3**	**23,1**	γ_{M0}	M12 x 195	**7,0**
			Ø4 x 60		**21,2**				
		LBS	Ø5 x 40		**17,3**				
			Ø5 x 50		**21,2**				
5	**WZU3004 + WZUW**	LBA	Ø4 x 40	15	**23,6**	**23,1**	γ_{M0}	M12 x 195	**7,0**
			Ø4 x 60		**28,9**				
		LBS	Ø5 x 40		**23,6**				
			Ø5 x 50		**28,9**				
6	**WZU4004 + WZUW**	LBA	Ø4 x 40	15	**23,6**	**23,1**	γ_{M0}	M12 x 195	**7,0**
			Ø4 x 60		**28,9**				
		LBS	Ø5 x 40		**23,6**				
			Ø5 x 50		**28,9**				

(*)Washer to be ordered separately.
(1) Precut INA threaded rod, with nut and washer. VIN-FIX chemical anchor according to ETA-20/0363.

STRUCTURAL VALUES | TIMBER-TO-CONCRETE TENSILE JOINT

WZU STRONG WITH WASHER*

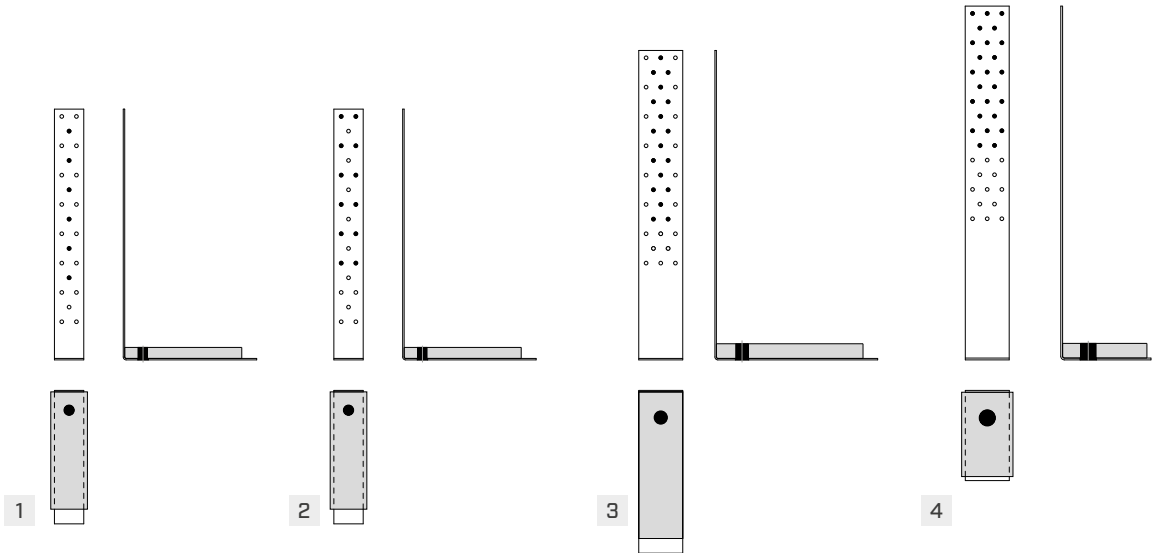

	CODE	fastening holes Ø5			TIMBER	STEEL		CONCRETE	
		type	Ø x L	n_V	$R_{1,k\ timber}$	$R_{1,k\ steel}$		$R_{1,d\ uncracked}$ VIN-FIX(1) Ø x L, cl.5.8	
			[mm]	pcs	[kN]	[kN]	γ_{steel}	[mm]	[kN]
1	**WZU342**	LBA	Ø4 x 40	6	**9,4**	**11,6**	γ_{M0}	M12 x 195	**22,5**
			Ø4 x 60		**11,6**				
		LBS	Ø5 x 40		**9,4**				
			Ø5 x 50		**11,6**				
2	**WZU342**	LBA	Ø4 x 40	12	**18,8**	**11,6**	γ_{M0}	M12 x 195	**22,5**
			Ø4 x 60		**23,2**				
		LBS	Ø5 x 40		**18,8**				
			Ø5 x 50		**23,2**				
3	**WZU422**	LBA	Ø4 x 40	18	**22,0**	**17,3**	γ_{M0}	M16 x 195	**29,3**
			Ø4 x 60		**27,0**				
		LBS	Ø5 x 40		**22,0**				
			Ø5 x 50		**27,0**				
4	**WZU482**	LBA	Ø4 x 40	25	**39,3**	**21,7**	γ_{M0}	M20 x 245	**38,6**
			Ø4 x 60		**48,3**				
		LBS	Ø5 x 40		**39,3**				
			Ø5 x 50		**48,3**				

(*)Washer to be ordered separately.
(1) Precut INA threaded rod, with nut and washer. VIN-FIX chemical anchor according to ETA-20/0363.

GENERAL PRINCIPLES

- Characteristic values are consistent with EN 1995:2014 and in accordance with ETA.
- Design values can be obtained from characteristic values as follows:

$$R_d = min \begin{cases} \frac{R_{k,\ timber} \cdot k_{mod}}{\gamma_M} \\ \frac{R_{k,\ steel}}{\gamma_{M0}} \\ R_{d,\ concrete} \end{cases}$$

The coefficients k_{mod}, γ_M and γ_{M0} should be taken according to the current regulations used for the calculation.

- The calculation process used a timber characteristic density of ρ_k = 350 kg/m^3 and C25/30 concrete with a thin reinforcing layer, minimum thickness of 240 mm, where edge-distance is not a limiting factor.
- Dimensioning and verification of timber and concrete elements must be carried out separately.
- The strength values of the connection system are valid under the calculation hypothesis listed in the table; for different boundary conditions (e.g. minimum edge distances) shall be verified.

WKF

ANGLE BRACKET FOR FACADES

CE
ETA

FAÇADES
It is ideal for cladding on new and existing structures. Installation on timber, masonry and concrete walls.

SPECIAL STEEL
S350 high strength steel provides high bending capacity.

ROBUST
Reinforcements are designed to ensure high levels of stiffness. Fast and easy installation.



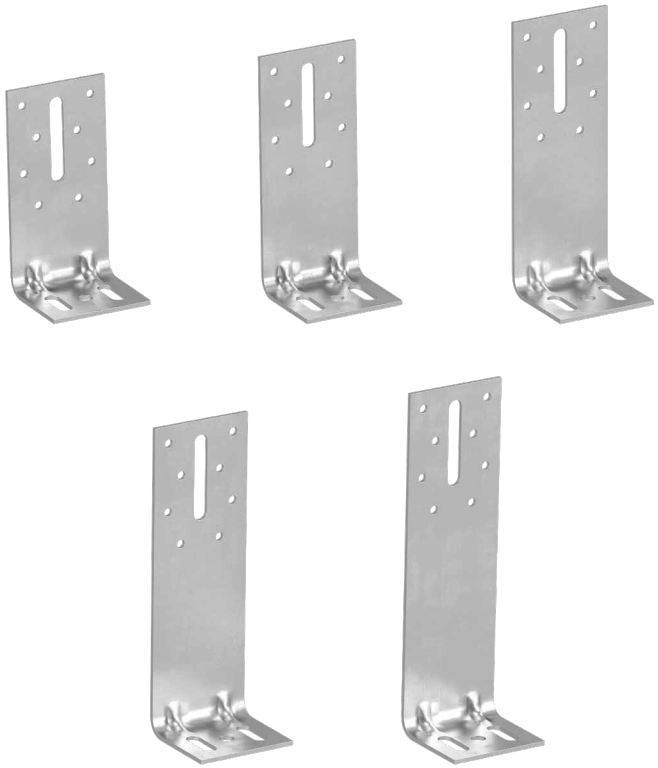

SERVICE CLASS	SC1 SC2
MATERIAL	
S350 Z275	S350GD + Z275 carbon steel
HEIGHT [mm]	from 120 to 200 mm



FIELD OF USE

Timber substructure joints in wall cladding systems.
The different lengths are adapted to the different thickness of the insulation material.
Suitable for timber, concrete or masonry walls.

Can be applied to:
- solid timber and glulam
- LVL
- other timber-based materials

CODES AND DIMENSIONS

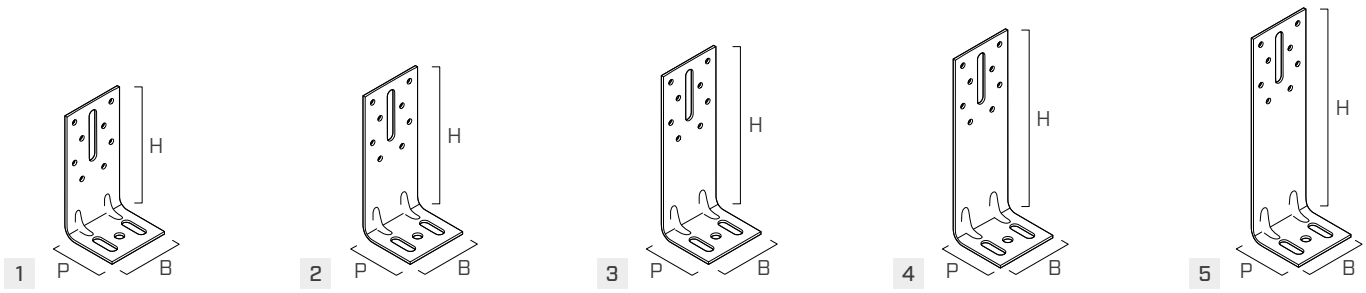

	CODE	B [mm]	P [mm]	H [mm]	s [mm]	n Ø5 *n Ø0.20* [pcs]	n Ø8,5 *n Ø0.33* [pcs]	*B [in]*	*P [in]*	*H [in]*	*s [in]*	n $Ø_V$ [pcs]	n $Ø_H$ [pcs]	pcs
1	**WKF120**	60	54	120	2,5	8	1	*2 3/8*	*2 1/8*	*4 3/4*	*0.10*	1 - Ø8,5 x 41,5 *1 - Ø0.34 x 1.63*	2 - Ø8,5 x 16,5 *2 - Ø0.34 x 0.65*	100
2	**WKF140**	60	54	140	2,5	8	1	*2 3/8*	*2 1/8*	*5 1/2*	*0.10*	1 - Ø8,5 x 41,5 *1 - Ø0.34 x 1.63*	2 - Ø8,5 x 16,5 *2 - Ø0.34 x 0.65*	100
3	**WKF160**	60	54	160	2,5	8	1	*2 3/8*	*2 1/8*	*6 1/4*	*0.10*	1 - Ø8,5 x 41,5 *1 - Ø0.34 x 1.63*	2 - Ø8,5 x 16,5 *2 - Ø0.34 x 0.65*	100
4	**WKF180**	60	54	180	2,5	8	1	*2 3/8*	*2 1/8*	*7 1/8*	*0.10*	1 - Ø8,5 x 41,5 *1 - Ø0.34 x 1.63*	2 - Ø8,5 x 16,5 *2 - Ø0.34 x 0.65*	100
5	**WKF200**	60	54	200	2,5	8	1	*2 3/8*	*2 1/8*	*8*	*0.10*	1 - Ø8,5 x 41,5 *1 - Ø0.34 x 1.63*	2 - Ø8,5 x 16,5 *2 - Ø0.34 x 0.65*	100

FASTENERS

type	description		d [mm]	support	page
LBA	high bond nail		4		570
LBS	round head screw	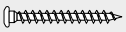	5		571
SKR	screw-in anchor	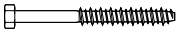	10		528
VIN-FIX	vinyl ester chemical anchor	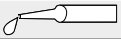	M8		545

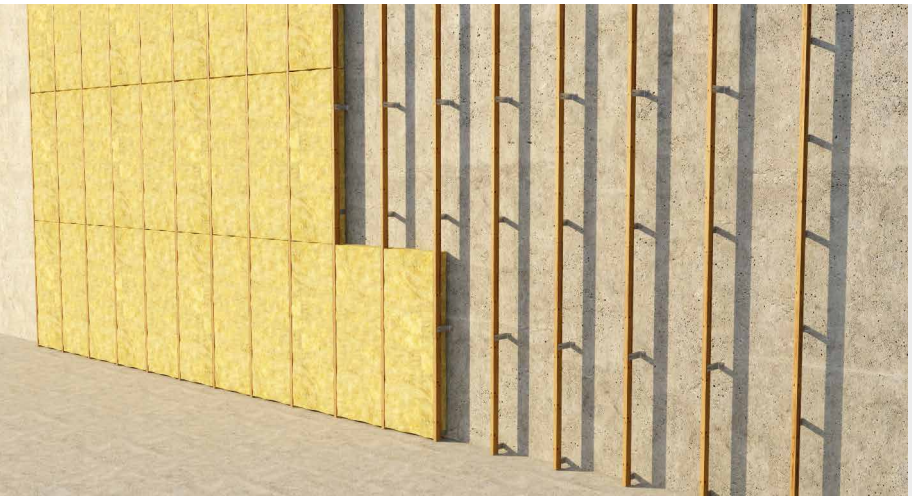

EXTERNAL INSULATION

To fix the timber framing to the wall, while creating the space to accommodate the thermal insulation and the waterproofing membrane.

WBR | WBO | WVS | WHO

STANDARD ANGLE BRACKETS

CE
ETA

COMPLETE RANGE
Simple and effective angle brackets available in a full range of sizes to meet all structural and non-structural needs.

TIMBER AND CONCRETE
Due to the quantity and arrangement of the fastening holes, they can be used for both timber to timber, and timber to concrete connections.

CERTIFICATION
Suitability of use is guaranteed by the CE marking according to ETA.



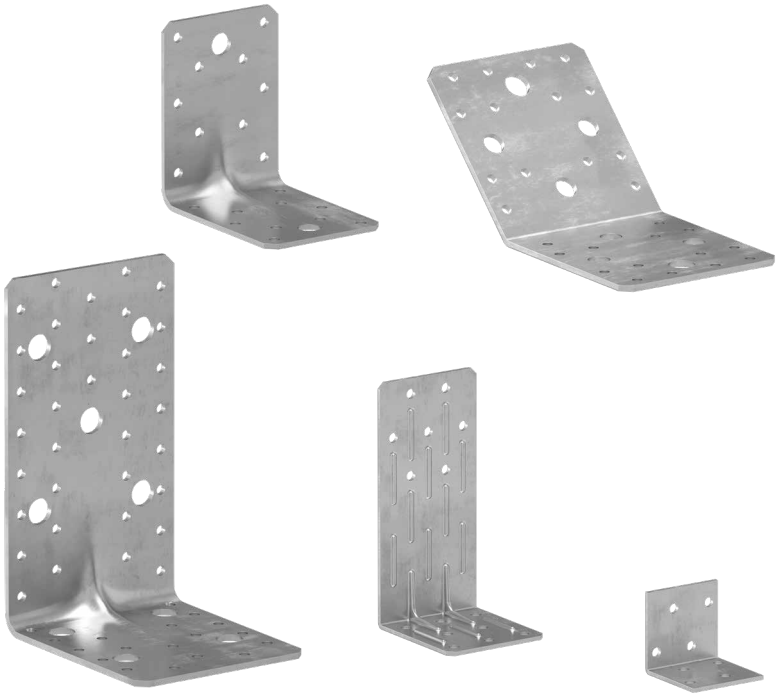

SERVICE CLASS

SC1 SC2 — **WBR, WBO, WVS, WHO**

SC1 SC2 SC3 — **WBR A2**

MATERIAL

DX51D Z275 — **WBR**: DX51D +Z275 carbon steel

A2 AISI 304 — **WBR A2, WHO A2, LBV A2**: A2 AISI304 stainless steel

S250 Z275 — **WBO - WVS - WHO**: S250GD +Z275 carbon steel



FIELD OF USE

Structural or non-structural applications for fastening any timber element.
Suitable for small structures, furniture and small joinery connections.

Can be applied to:
- solid timber and glulam
- LVL
- other timber-based materials

CODES AND DIMENSIONS

WBR 70-90-100

DX51D Z275

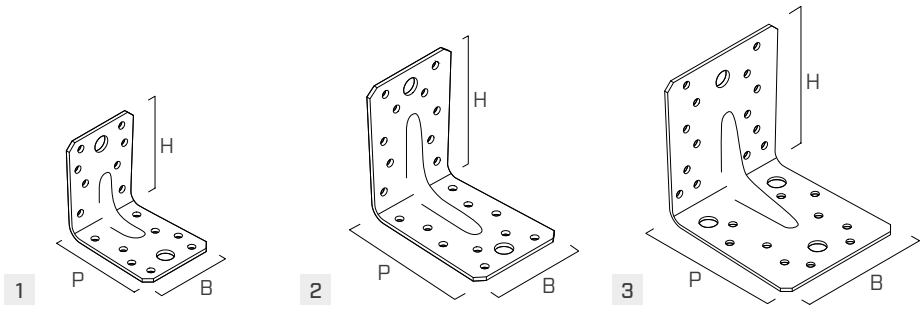

	CODE	B [mm]	P [mm]	H [mm]	s [mm]	*B [in]*	*P [in]*	*H [in]*	*s [in]*	n Ø5 *n Ø0.20* [pcs]	n Ø11 *n Ø0.44* [pcs]			pcs
1	**WBR07015**	55	70	70	1,5	*2 3/16*	*2 3/4*	*2 3/4*	*0.06*	16	2	●	●	100
2	**WBR09015**	65	90	90	1,5	*2 9/16*	*3 1/2*	*3 1/2*	*0.06*	20	2	●	●	100
3	**WBR10020**	90	105	105	2,0	*3 1/2*	*4 1/8*	*4 1/8*	*0.08*	24	4	●	●	50

WBR A2 70-90-100

A2 AISI 304

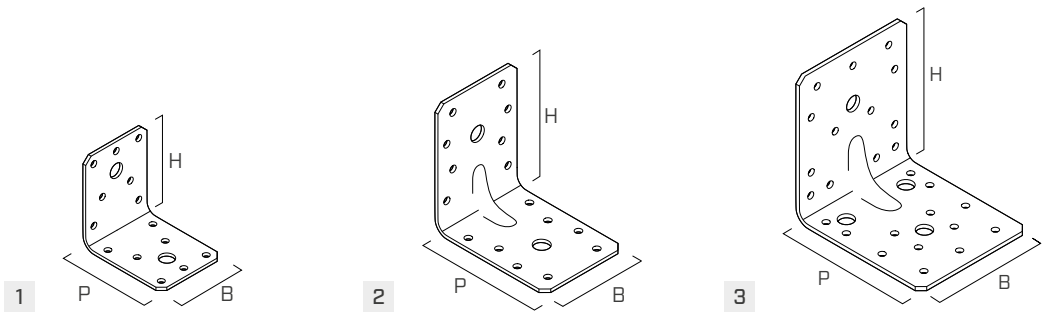

	CODE	B [mm]	P [mm]	H [mm]	s [mm]	*B [in]*	*P [in]*	*H [in]*	*s [in]*	n Ø5 *n Ø0.20* [pcs]	n Ø11 *n Ø0.44* [pcs]			pcs
1	**AI7055**	55	70	70	2,0	*2 3/16*	*2 3/4*	*2 3/4*	*0.08*	14	2	●	●	100
2	**AI9065**	65	90	90	2,5	*2 9/16*	*3 1/2*	*3 1/2*	*0.10*	16	2	●	●	100
3	**AI10090**	90	105	105	2,5	*3 1/2*	*4 1/8*	*4 1/8*	*0.10*	26	4	●	●	50

WBR 90110-170

DX51D Z275

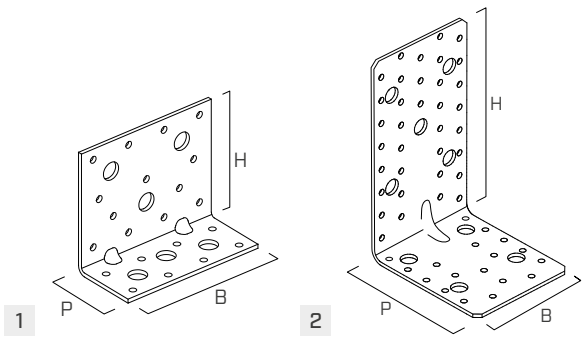

	CODE	B [mm]	P [mm]	H [mm]	s [mm]	*B [in]*	*P [in]*	*H [in]*	*s [in]*	n Ø5 *n Ø0.20* [pcs]	n Ø13 *n Ø0.52* [pcs]			pcs
1	**WBR90110**	110	50	90	3,0	*4 3/8*	*1 15/16*	*3 1/2*	*0.12*	21	6	●	●	50
2	**WBR170**	95	114	174	3,0	*3 3/4*	*4 1/2*	*6 7/8*	*0.12*	53	9	●	●	25

CODES AND DIMENSIONS

WBO 50 - 60 - 90

S250 Z275

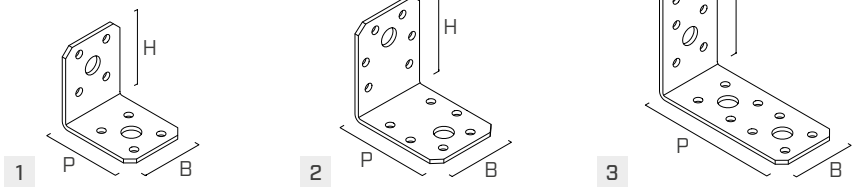

	c	B [mm]	P [mm]	H [mm]	s [mm]	*B* *[in]*	*P* *[in]*	*H* *[in]*	*s* *[in]*	n Ø5 *n Ø0.20* [pcs]	n Ø11 *n Ø0.44* [pcs]			pcs
1	**WBO5040**	40	50	50	2,5	*1 9/16*	*1 15/16*	*1 15/16*	*0.10*	8	2	●	●	150
2	**WBO6045**	45	60	60	2,5	*1 3/4*	*2 3/8*	*2 3/8*	*0.10*	12	2	●	●	50
3	**WBO9040**	40	90	90	3,0	*1 9/16*	*3 1/2*	*3 1/2*	*0.12*	16	4	●	●	100

WBO 135°

S250 Z275

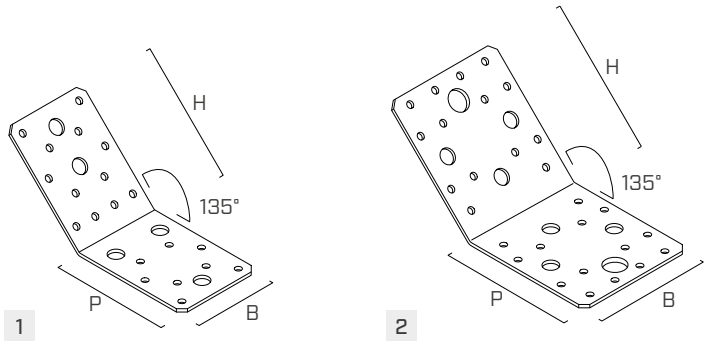

	CODE	B [mm]	P [mm]	H [mm]	s [mm]	*B* *[in]*	*P* *[in]*	*H* *[in]*	*s* *[in]*	n Ø5 *n Ø0.20* [pcs]	n Ø11 *n Ø0.44* [pcs]	n Ø13 *n Ø0.52* [pcs]			pcs
1	**WBO13509**	65	90	90	2,5	*2 9/16*	*3 1/2*	*3 1/2*	*0.10*	20	5	-	●	●	100
2	**WBO13510**	90	100	100	3,0	*3 1/2*	*4*	*4*	*0.12*	28	6	2	●	●	40

WVS 80 - 120

S250 Z275

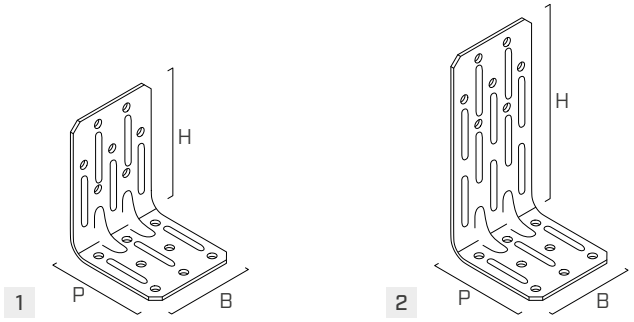

	CODE	B [mm]	P [mm]	H [mm]	s [mm]	*B* *[in]*	*P* *[in]*	*H* *[in]*	*s* *[in]*	n Ø5 *n Ø0.20* [pcs]			pcs
1	**WVS8060**	55	60	80	2,0	*2 3/16*	*2 3/8*	*3 1/8*	*0.08*	15	●	-	100
2	**WVS12060**	55	60	120	2,0	*2 3/16*	*2 3/8*	*4 3/4*	*0.08*	15	●	-	100

CODES AND DIMENSIONS

WVS 90

S250 Z275

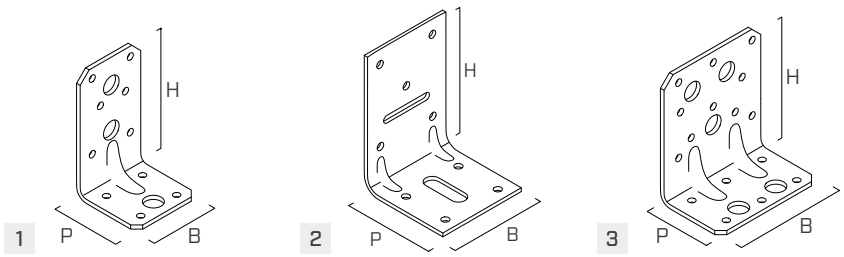

	CODE	B [mm]	P [mm]	H [mm]	s [mm]	*B [in]*	*P [in]*	*H [in]*	*s [in]*	n Ø5 *n Ø0.20* [pcs]	n Ø13 *n Ø0.52* [pcs]	n $Ø_V$ [pcs]	n $Ø_H$ [pcs]			pcs
1	**WVS9050**	50	50	90	3,0	*1 15/16*	*1 15/16*	*3 1/2*	*0.12*	10	3	-	-	●	●	100
2	**WVS9060**	60	60	90	2,5	*2 3/8*	*2 3/8*	*3 1/2*	*0.10*	9	-	1 - Ø5 x 30 *1 - Ø0.20 x 1 3/16*	1 - Ø10 x 30 *1 - Ø0.40 x 1 3/16*	●	-	100
3	**WVS9080**	80	50	90	3,0	*3 1/8*	*1 15/16*	*3 1/2*	*0.12*	16	5	-	-	●	●	100

WHO 40 - 60

S250 Z275

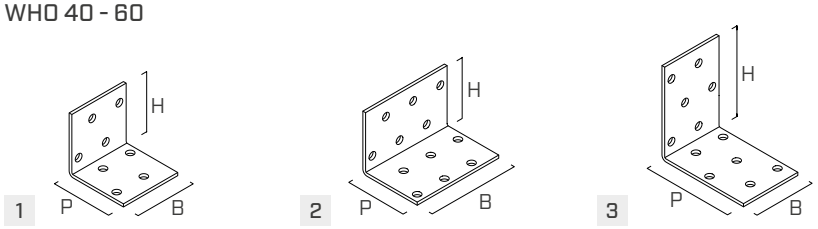

	CODE	B [mm]	P [mm]	H [mm]	s [mm]	*B [in]*	*P [in]*	*H [in]*	*s [in]*	n Ø5 *n Ø0.20* [pcs]	n_V Ø5 *n_V Ø0.20* [pcs]	n_H Ø5 *n_H Ø0.20* [pcs]			pcs
1	**WHO4040**	40	40	40	2,0	*1 9/16*	*1 9/16*	*1 9/16*	*0.08*	8	4	4	●	-	200
2	**WHO4060**	60	40	40	2,0	*2 3/8*	*1 9/16*	*1 9/16*	*0.08*	12	6	6	●	-	150
3	**WHO6040**	40	60	60	2,0	*1 9/16*	*2 3/8*	*2 3/8*	*0.08*	12	6	6	●	-	150

WHO 120 - 160 - 200

S250 Z275

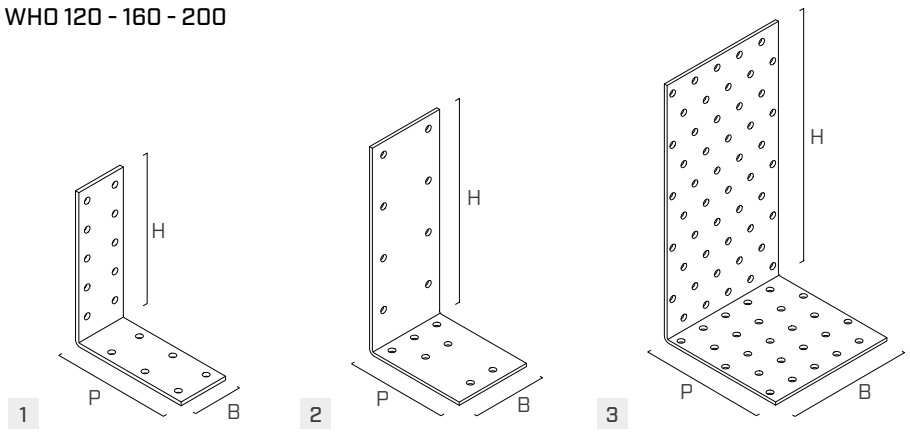

	CODE	B [mm]	P [mm]	H [mm]	s [mm]	*B [in]*	*P [in]*	*H [in]*	*s [in]*	n Ø5 *n Ø0.20* [pcs]	n_V Ø5 *n_V Ø0.20* [pcs]	n_H Ø5 *n_H Ø0.20* [pcs]			pcs
1	**WHO12040**	40	95	120	3,0	*1 9/16*	*3 3/4*	*4 3/4*	*0.12*	16	10	6	●	-	100
2	**WHO16060**	60	80	160	4,0	*2 3/8*	*3 1/8*	*6 1/4*	*0.16*	15	8	7	●	-	50
3	**WHO200100**	100	100	200	2,5	*4*	*4*	*8*	*0.10*	75	50	25	●	-	25

WHO A2 | AISI304 - LBV A2 | AISI304

A2 AISI 304

	CODE	B [mm]	P [mm]	H [mm]	s [mm]	*B [in]*	*P [in]*	*H [in]*	*s [in]*	n Ø4,5 *n Ø0.18* [pcs]	pcs
1	**WHOI1540**	15	40	40	1,75	*9/16*	*1 9/16*	*1 9/16*	*0.07*	4	50
2	**LBVI15100**	15	100	-	1,75	*9/16*	*4*	-	*0.07*	4	50



LOG

ANGLE BRACKET FOR LOG HOUSE

EFFECTIVE
The unique geometry and design of the bracket, supports the hygrometric deformation of wooden elements.

STUDS
LOG210 version is ideal for the fastening of timber studs to horizontal wooden elements.

BEAMS
LOG250 is highly suited for the fastening of timber joists to horizontal wooden elements.



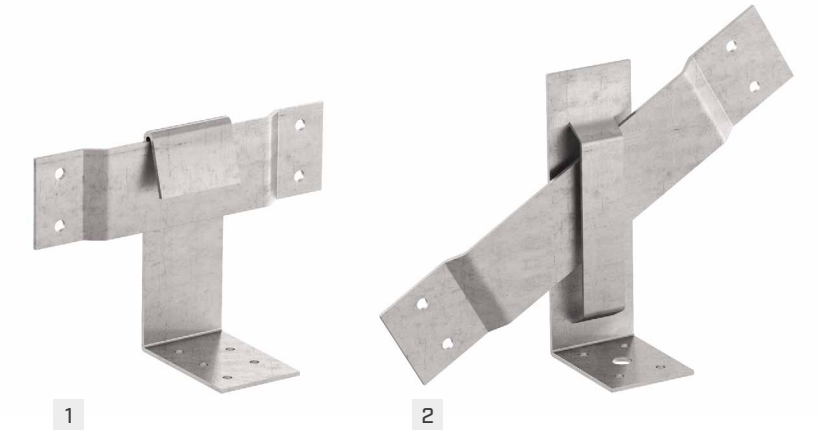

THICKNESS [mm]

2,0 mm

GEOMETRY

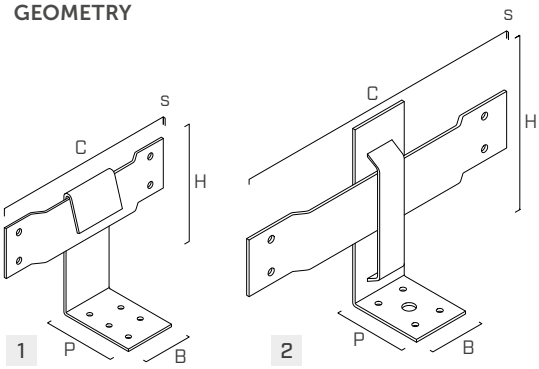

MATERIAL

DX51D Z275 — DX51D + Z275 carbon steel

SERVICE CLASS

SC1 SC2

CODES AND DIMENSIONS

	CODE	B [mm] *[in]*	P [mm] *[in]*	H [mm] *[in]*	C [mm] *[in]*	s [mm] *[in]*	n Ø5 *n Ø0.20* [pcs]	n Ø8,5 *n Ø0.34* [pcs]	pcs
1	**LOG210**	40 *1 9/16*	65 *2 9/16*	78 *3 1/16*	210 *8 1/4*	2 *0.08*	9	-	25
2	**LOG250**	40 *1 9/16*	52 *2 1/16*	125 *4 15/16*	250 *10*	2 *0.08*	8	1	25



FIELD OF USE

Special plate for connections requiring freedom of movement.

Can be applied to:
- solid timber and glulam
- LVL
- other timber-based materials

SPU

UNI ANCHOR PLATE FOR JOISTS



TIMBER-TO-TIMBER
Ideal for fastening joists to platform beams. Suitability of use is guaranteed by the CE marking according to ETA.

UNIQUE MODEL
The same model can be installed on the right or left side of the beam. Two anchors are recommended for each joint.

HURRICANES
Suitable for transferring tensile forces caused by negative wind or hurricane pressures.

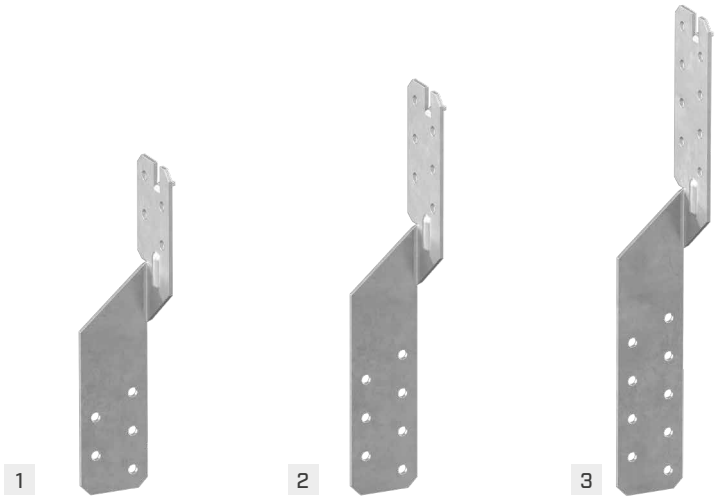

THICKNESS [mm]

2,0 mm

HEIGHT [mm]

170, 210 and 250 mm

GEOMETRY

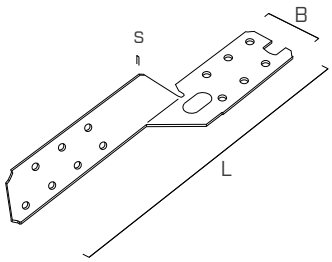

MATERIAL

S250 Z275 S250GD + Z275 carbon steel

SERVICE CLASS

SC1 SC2

CODES AND DIMENSIONS

	CODE	L [mm]	B [mm]	s [mm]	*L [in]*	*B [in]*	*s [in]*	n Ø5 *n Ø0.20* [pcs]	pcs
1	**SPU170**	170	36	2	*6 3/4*	*1 7/16*	*0.08*	9	100
2	**SPU210**	210	36	2	*8 1/4*	*1 7/16*	*0.08*	13	100
3	**SPU250**	250	36	2	*10*	*1 7/16*	*0.08*	17	100



FIELD OF USE

Angle plate to prevent lifting of timber elements.

Can be applied to:
- solid timber and glulam
- LVL
- other timber-based materials

TITAN PLATE C CONCRETE

PLATE FOR SHEAR LOADS

DESIGN REGISTERED

UK CA EN 14545

CE EN 14545

VERSATILE
It can be used for continuous connection to the substructure of both CLT and light timber frame walls.

INNOVATIVE
Designed to be partially or completely fastened with nails or screws. Possibility of installation even in the presence of bedding grout.

CALCULATED AND CERTIFIED
CE marking according to EN 14545. Available in 2 versions. TCP300 with increased thickness optimised for CLT.

USA, Canada and more design values available online.

SERVICE CLASS SC1 SC2

MATERIAL

DX51D Z275 **TCP200**: DX51D + Z275 carbon steel

S355 Fe/Zn12c **TCP300**: S355 + Fe/Zn12c carbon steel

EXTERNAL LOADS

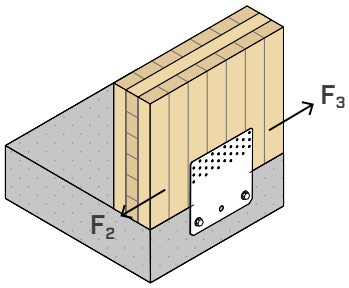

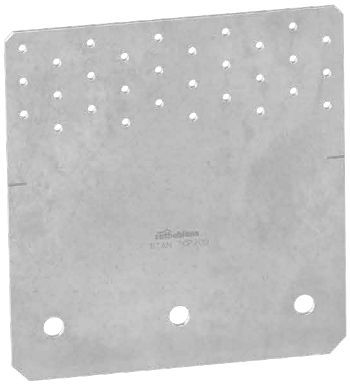

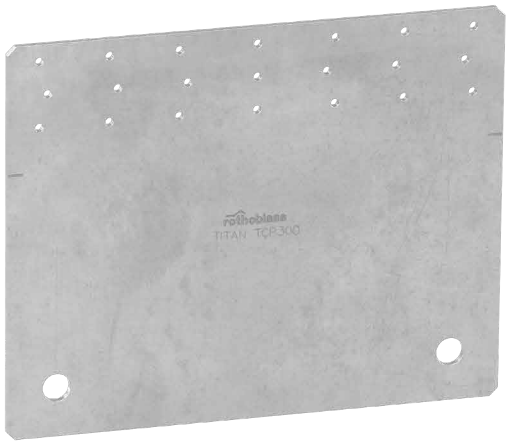



FIELDS OF USE

Shear joints for timber walls.
Timber-to-concrete or timber to-steel configurations.
Suitable for walls aligned to the concrete edge.

Can be applied to:
- solid timber and glulam
- timber frame
- CLT and LVL panels





ADDED STOREYS

Ideal for making flat joints between concrete or masonry elements and CLT panels. Construction of continuous shear connections.

HYBRID STRUCTURES

Within hybrid timber-to-steel structures, it can be used for shear connections by simply aligning the edge of the timber with the edge of the steel element.

CODES AND DIMENSIONS

CODE	B [mm]	H [mm]	holes	s [mm]	*B [in]*	*H [in]*	*holes*	*s [in]*	n_V Ø5 *n_V Ø0.20* [pcs]		pcs
TCP200	200	214	Ø13	3	*8*	*8 7/16*	*Ø0.52*	*0.12*	30	●	10
TCP300	300	240	Ø17	4	*11 3/4*	*9 1/2*	*Ø0.67*	*0.16*	21	●	5

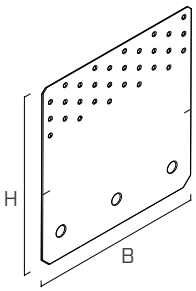

GEOMETRY

TCP200

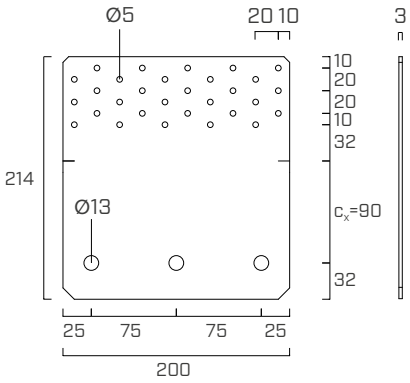

TCP300

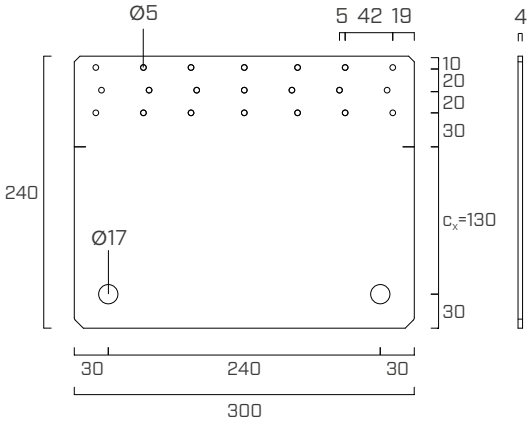

FASTENERS

type	description		d [mm]	support	page
LBA	high bond nail		4		570
LBS	round head screw		5		571
LBS EVO	C4 EVO round head screw		5		571
SKR	screw-in anchor		12 - 16		528
VIN-FIX	vinyl ester chemical anchor		M12 - M16		545
HYB-FIX	hybrid chemical anchor		M12 - M16		552
EPO-FIX	epoxy chemical anchor		M12 - M16		557

INSTALLATION

TIMBER minimum distances			nails LBA Ø4	screws LBS Ø5
C/GL	$a_{4,t}$	[mm]	≥ 20	≥ 25
CLT	$a_{3,t}$	[mm]	≥ 28	≥ 30

- C/GL: minimum distances for solid timber or glulam consistent with EN 1995:2014 according to ETA considering a timber density $\rho_k \leq 420$ kg/m^3
- CLT minimum distances for Cross Laminated Timber according to ÖNORM EN 1995:2014 (Annex K) for nails and ETA-11/0030 for screws

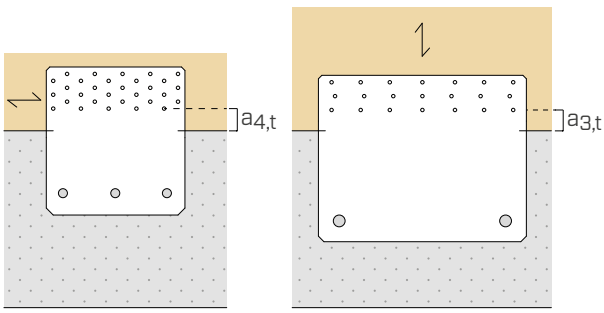

FASTENING PATTERNS

PARTIAL FASTENING

In the presence of design requirements such as varying stress values or the presence of a grout between the wall and the support surface, it is possible to use pre-calculated **partial nailing patterns** or to position the plates as required (e.g. lowered plates). Take care to respect the minimum distances indicated in the table and verify the strength of the anchor-to-concrete group taking into account the increase in distance from the edge (c_x). Below there are some examples of possible limit configurations:

TCP200

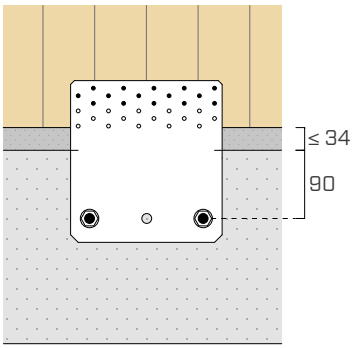

partial 15 fasteners - CLT

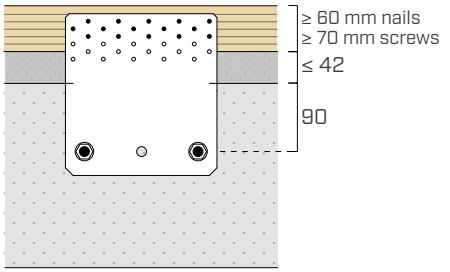

partial 15 fastenings - C/GL

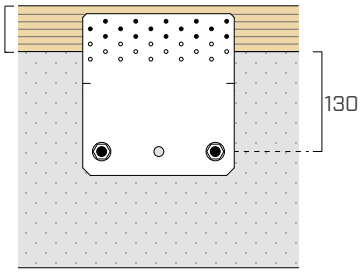

lowered plate - C/GL

TCP300

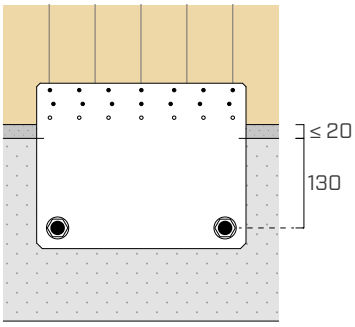

partial 14 fastenings - CLT

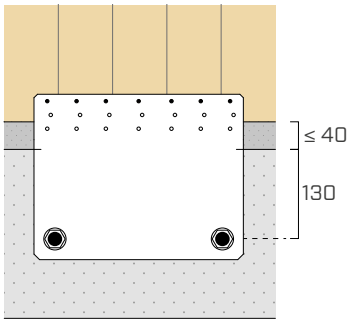

partial 7 fastenings - CLT

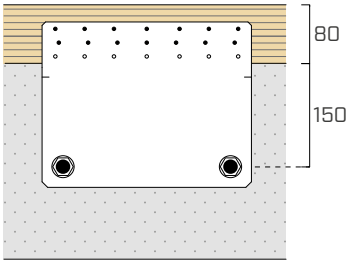

lowered plate - C/GL

MOUNTING

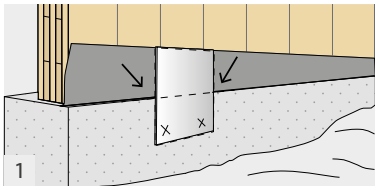

Positioning of the TITAN TCP with the dashed line at the timber-concrete interface and hole marking.

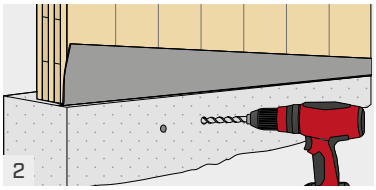

Removal of the TITAN TCP plate and drilling of the concrete support.

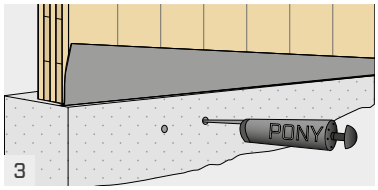

Accurate hole cleaning.

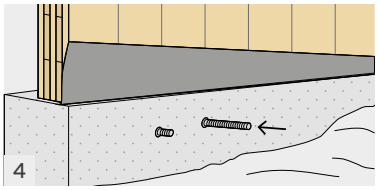

Injection of the anchor and insertion of the threaded rods into the holes.

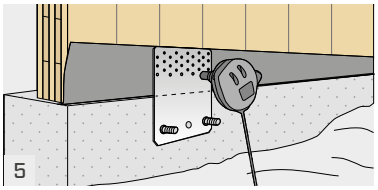

Installation of the TITAN TCP and nailing.

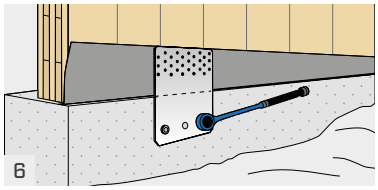

Positioning of nuts and washers by adequate tightening.

STRUCTURAL VALUES | **TCP200** | TIMBER-TO-CONCRETE | $F_{2/3}$

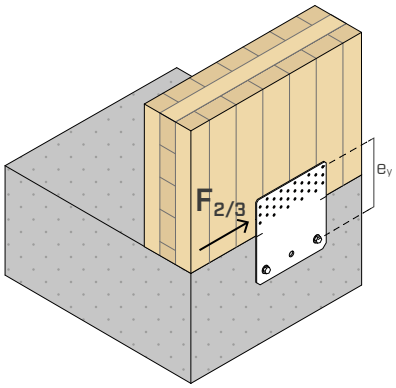

total fastening

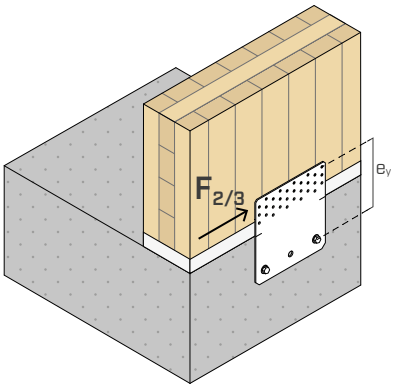

partial fastening

TIMBER STRENGTH

configuration on timber	TIMBER					STEEL		CONCRETE		
	fastening holes Ø5			$R_{2/3,k\ timber}$ [1]	$R_{2/3,k\ CLT}$ [2]	$R_{2/3,k\ steel}$		fastening holes Ø13		
	type	Ø x L [mm]	n_V [pcs]	[kN]	[kN]	[kN]	γ_{steel}	Ø [mm]	n_V [pcs]	e_y [3] [mm]
total fastening	LBA	Ø4 x 60	30	**62,9**	**84,9**	**21,8**	γ_{M2}	M12	2	147
	LBS	Ø5 x 60	30	**54,0**	**69,8**					
partial fastening	LBA	Ø4 x 60	15	**31,5**	**42,5**	**20,5**	γ_{M2}			162
	LBS	Ø5 x 60	15	**27,0**	**34,9**					

CONCRETE STRENGTH

Concrete strength values of some of the possible anchoring solutions, according to the configurations adopted for fastening on timber (e_y). It is assumed that the plate is positioned with the assembly notches at the timber-to-concrete interface (distance between anchor and concrete edge c_x = 90 mm).

			total fastening (e_y = 147 mm)	partial fastening (e_y = 162 mm)
configuration on concrete	**fastening holes Ø13**		$R_{2/3,d\ concrete}$	$R_{2/3,d\ concrete}$
	type	**Ø x L** [mm]	[kN]	[kN]
uncracked	VIN-FIX 5.8	M12 x 140	**12,6**	**11,5**
		M12 x 195	**13,4**	**12,2**
	SKR	12 x 90	**11,3**	**10,3**
	AB1	M12 x 100	**13,1**	**11,9**
cracked	VIN-FIX 5.8	M12 x 140	**8,9**	**8,1**
		M12 x 195	**9,5**	**8,7**
	SKR	12 x 90	**8,0**	**7,3**
	AB1	M12 x 100	**9,2**	**8,4**
seismic	HYB-FIX 8.8	M12 x 140	**6,6**	**6,1**
		M12 x 195	**8,1**	**7,4**
	EPO-FIX 8.8	M12 x 140	**7,6**	**6,9**

NOTES

[1] Strength values for use on solid timber or glulam platform beam, calculated considering the effective number according to Table 8.1 (EN 1995:2014).

[2] Strength values for use on CLT.

[3] Eccentricity of calculation for verification of the anchor-to-concrete group.

STRUCTURAL VALUES | **TCP300** | TIMBER-TO-CONCRETE | $F_{2/3}$

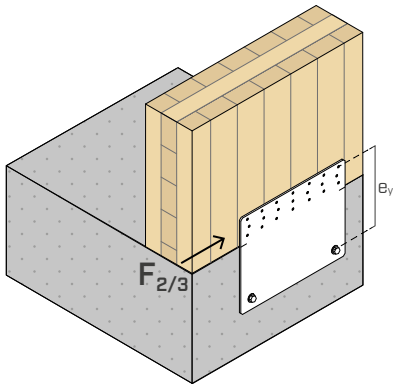

total fastening

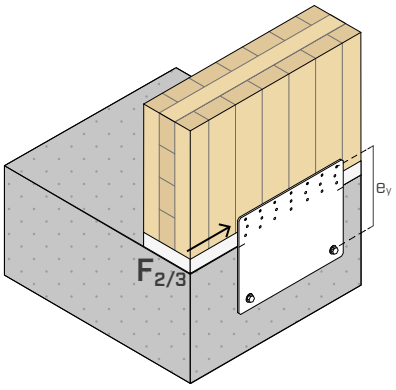

partial fastening

TIMBER STRENGTH

configuration on timber	TIMBER					STEEL		CONCRETE		
	fastening holes Ø5			$R_{2/3,k\ timber}$ (1)	$R_{2/3,k\ CLT}$ (2)	$R_{2/3,k\ steel}$		fastening holes Ø17		
	type	Ø x L [mm]	n_V [pcs]	[kN]	[kN]	[kN]	γ_{steel}	Ø [mm]	n_V [pcs]	e_y (3) [mm]
total fastening	LBA	Ø4 x 60	21	**43,4**	**59,4**	**64,0**	γ_{M2}	M16	2	180
	LBS	Ø5 x 60	21	**36,8**	**48,9**					
partial fastening 14 fasteners	LBA	Ø4 x 60	14	**29,0**	**39,6**	**60,5**	γ_{M2}			190
	LBS	Ø5 x 60	14	**24,6**	**32,6**					
partial fastening 7 fasteners	LBA	Ø4 x 60	7	**14,5**	**19,8**	**57,6**	γ_{M2}			200
	LBS	Ø5 x 60	7	**12,3**	**16,3**					

CONCRETE STRENGTH

Concrete strength values of some of the possible anchoring solutions, according to the configurations adopted for fastening on timber (e_y). It is assumed that the plate is positioned with the assembly notches at the timber-to-concrete interface (distance between anchor and concrete edge c_x = 130 mm).

configuration on concrete	fastening holes Ø17		total fastening (e_y = 180 mm)	partial fastening (e_y = 190 mm)	partial fastening (e_y = 200 mm)
	type	Ø x L [mm]	$R_{2/3,d\ concrete}$ [kN]	$R_{2/3,d\ concrete}$ [kN]	$R_{2/3,d\ concrete}$ [kN]
uncracked	VIN-FIX 5.8	M16 x 195	**29,6**	**28,3**	**27,0**
	SKR	16 x 130	**26,0**	**24,8**	**23,7**
	AB1	M16 x 145	**30,2**	**28,7**	**27,3**
cracked	VIN-FIX 5.8	M16 x 195	**21,0**	**20,0**	**19,1**
	SKR	16 x 130	**18,4**	**17,6**	**16,8**
	AB1	M16 x 145	**21,4**	**20,3**	**19,3**
seismic	HYB-FIX 8.8	M16 x 195	**16,8**	**16,2**	**15,6**
		M16 x 245	**18,6**	**17,7**	**16,9**
	EPO-FIX 8.8	M16 x 195	**17,8**	**17,0**	**16,9**

GENERAL PRINCIPLES

For the GENERAL PRINCIPLES of calculation, see page 306.

ANCHORS INSTALLATION PARAMETERS

installation	anchor type		t_{fix}	h_{ef}	h_{nom}	h_1	d_0	h_{min}
	type	Ø x L [mm]	[mm]	[mm]	[mm]	[mm]	[mm]	[mm]
TCP200	VIN-FIX 5.8 HYB-FIX 8.8 EPO-FIX 8.8	M12 x 140	3	112	112	120	14	150
	SKR	12 x 90	3	64	87	110	10	
	AB1	M12 x 100	3	70	80	85	12	
	VIN-FIX 5.8	M12 x 195	3	170	170	175	14	200
	HYB-FIX 8.8							
TCP300	VIN-FIX 5.8 HYB-FIX 8.8 EPO-FIX 8.8	M16 x 195	4	164	164	170	18	200
	SKR	16 x 130	4	85	126	150	14	
	AB1	M16 x 145	4	85	97	105	16	
	HYB-FIX 8.8	M16 x 245	4	210	210	215	18	250

Precut INA threaded rod, with nut and washer: see page 562.
MGS threaded rod class 8.8 to be cut to size: see page 174.

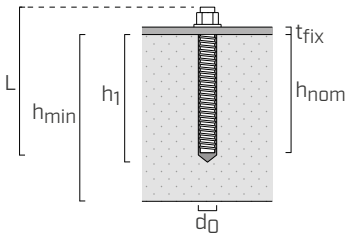

t_{fix}	fastened plate thickness
h_{nom}	nominal anchoring depth
h_{ef}	effective anchoring depth
h_1	minimum hole depth
d_0	hole diameter in the concrete support
h_{min}	concrete minimum thickness

ANCHORS VERIFICATION FOR STRESS LOADING $F_{2/3}$

Fastening to concrete using anchors must be verified on the basis of the load acting on the anchors, which depend on the timber fastening configuration.
The position and number of nails/screws determine the ey eccentricity value, understood as the distance between the centre of gravity of the nailing and that of the anchors.

The anchor group must be verified for:

$V_{Sd,x} = F_{2/3,d}$
$M_{Sd,z} = F_{2/3,d} \cdot e_y$

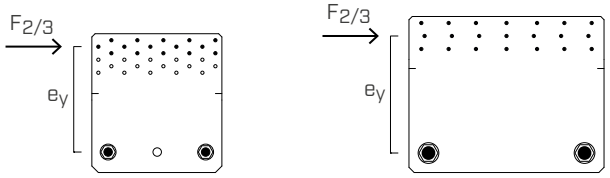

GENERAL PRINCIPLES

- Characteristic values according to EN 1995:2014.
- Design values can be obtained from characteristic values as follows:

$$R_d = min \begin{cases} \frac{(R_{k,\,timber} \text{ or } R_{k,\,CLT}) \cdot k_{mod}}{\gamma_M} \\ \frac{R_{k,\,steel}}{\gamma_{M2}} \\ R_{d,\,concrete} \end{cases}$$

  The coefficients k_{mod}, γ_M and γ_{M2} should be taken according to the current regulations used for the calculation.
- The calculation process used a timber characteristic density of ρ_k = 350 kg/m^3 and C25/30 concrete with a thin reinforcing layer and minimum thickness indicated in the table.
- Dimensioning and verification of timber and concrete elements must be carried out separately.
- The strength values are valid for the calculation hypothesis defined in the table; for boundary conditions different from the ones in the table (e.g. minimum distances from the edge), the anchors-to-concrete can be verified using MyProject calculation software according to the design requirements.
- Seismic design in performance category C2, without ductility requirements on anchors (option a2) and elastic design according to EN 1992:2018. For chemical anchors it is assumed that the annular space between the anchor and the plate hole is filled (α_{gap} = 1).
- The product ETAs for the anchors used in the concrete-side strength calculation are indicated below:
  - VIN-FIX chemical anchor according to ETA-20/0363;
  - HYB-FIX chemical anchor according to ETA-20/1285;
  - EPO-FIX chemical anchor according to ETA-23/0419;
  - SKR screw-in anchor according to ETA-24/0024;
  - AB1 mechanical anchor according to ETA-17/0481 (M12);
  - AB1 mechanical anchor according to ETA-99/0010 (M16).

INTELLECTUAL PROPERTY

- TITAN PLATE C plates are protected by the following Registered Community Designs:
  - RCD 002383265-0003;
  - RCD 008254353-0014.

EXPERIMENTAL INVESTIGATIONS | TCP300

In order to calibrate the numerical models used for the design and verification of the TCP300 plate, an experimental campaign was carried out in collaboration with the Institute for BioEconomy (IBE) - San Michele all'Adige.
The connection system nailed or screwed to CLT panels has been shear stressed through monotonic tests in displacement control, registering the load, displacement in the two main directions and collapse mode.
The results obtained were used to validate the analytical calculation model for the TCP300 plate, based on the hypothesis that the shear centre is placed at the centre of gravity of the fastenings on timber. Therefore that the anchors, usually the weak point of the system, are stressed not only by the shear actions but also by the local moment.
The study in different fastening configurations (Ø4 nails/Ø5 screws, full nailing, partial nailing with 14 connectors, partial nailing with 7 connectors) shows that the mechanical behaviour of the plate is strongly influenced by the **relative stiffness of the connectors** on timber compared to that of the anchors, in tests simulated by bolting on steel.
In all cases a shear failure mode of the timber fasteners has been observed, which does not result in evident plate rotation. Only in some cases (full nailing) the non-negligible rotation of the plate leads to an increase in stress on the timber fasteners resulting from a redistribution of the local moment with consequent stress relief on the anchors, which represent the limiting point of the overall strength of the system.

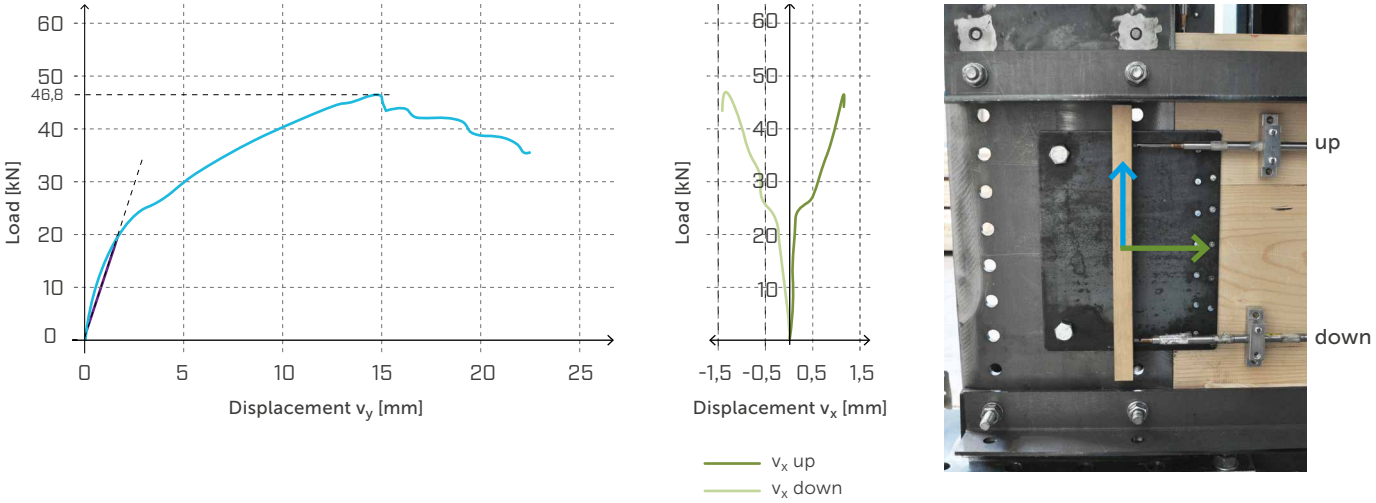

Load-to-displacement diagrams for TCP300 specimen with partial nailing (no. 14 LBA Ø4 x 60 mm nails).

Further investigations are necessary in order to define an analytical model that can be generalized to the different configurations of use of the plate that is able to provide the actual stiffness of the system and the redistribution of stresses as the boundary conditions (connectors and base materials) vary.

TITAN PLATE T TIMBER

PLATE FOR SHEAR LOADS

DESIGN REGISTERED

UK CA EN 14545

CE EN 14545

TIMBER-TO-TIMBER

These plates are ideal for the flat connection of the base plate to load-bearing timber panels.

CONTINUOUS CONNECTION

The 1.2 m long TTP1200 version allows the creation of long connections in panel floors, replacing the classic spline joint connection.

CALCULATED AND CERTIFIED

CE marking according to European standard EN 14545. Available in three versions. TTP300 and TTP1200 versions ideal for CLT.

USA, Canada and more design values available online.

SERVICE CLASS SC1 SC2

MATERIAL

DX51D Z275 DX51D + Z275 carbon steel

EXTERNAL LOADS

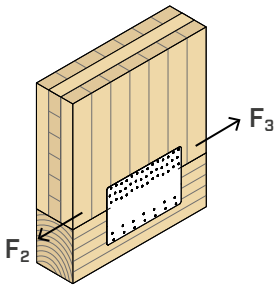

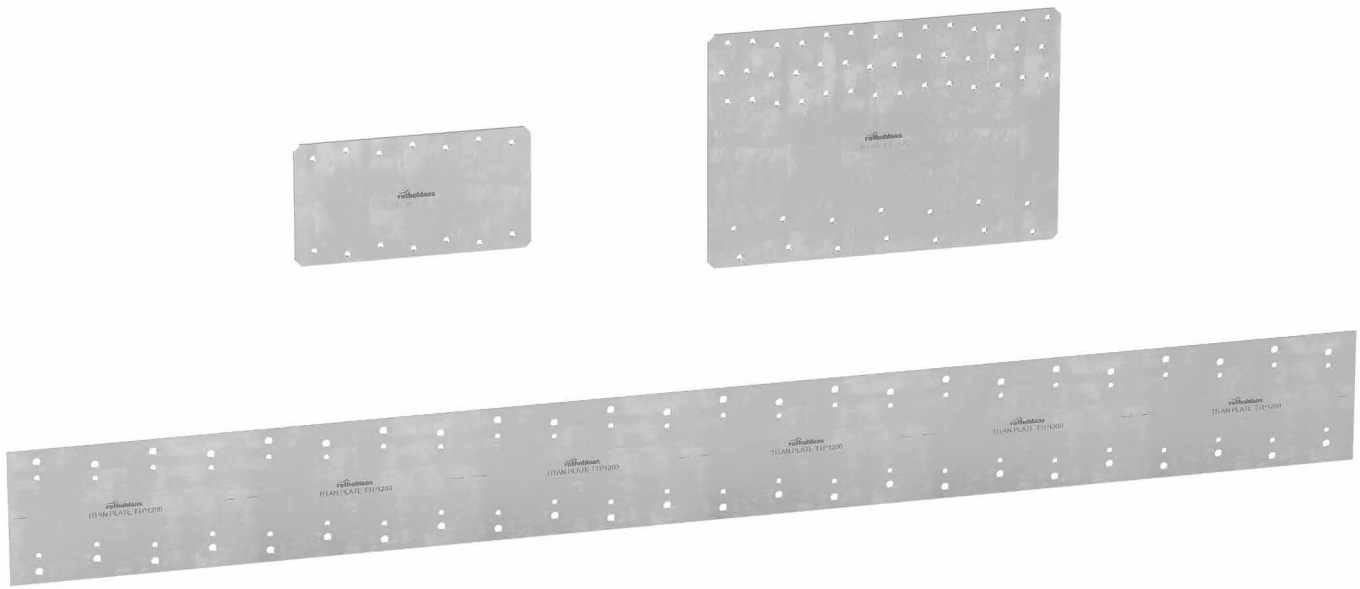

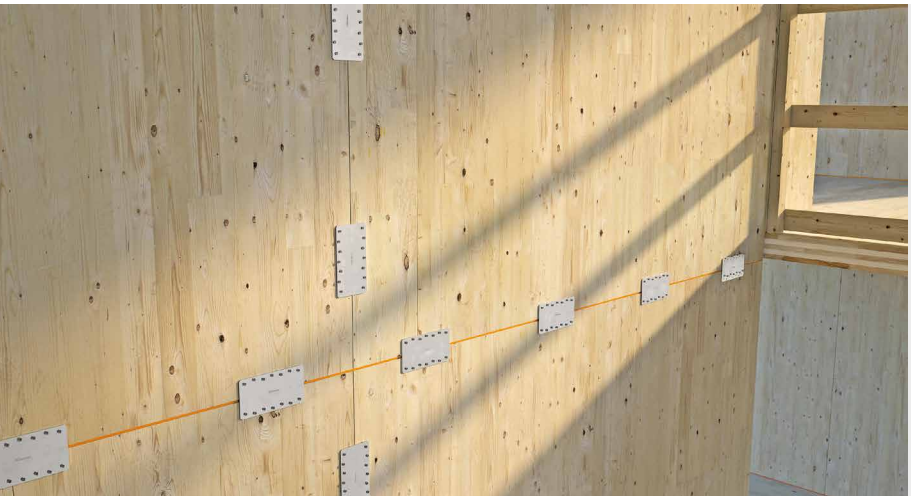

FIELDS OF USE

Shear joints for timber walls or floors.
Timber-to-timber configuration.

Can be applied to:

- solid timber and glulam
- timber frame
- CLT and LVL panels



SPLINE STRAP

Ideal for the construction of floors with diaphragm behaviour, restoring shear continuity between the different panels that make up the floor.

FASTENING PATTERNS

The 300 mm version, with asymmetrical nailing, allows fastening on both beams and CLT with optimised fastening patterns.

CODES AND DIMENSIONS

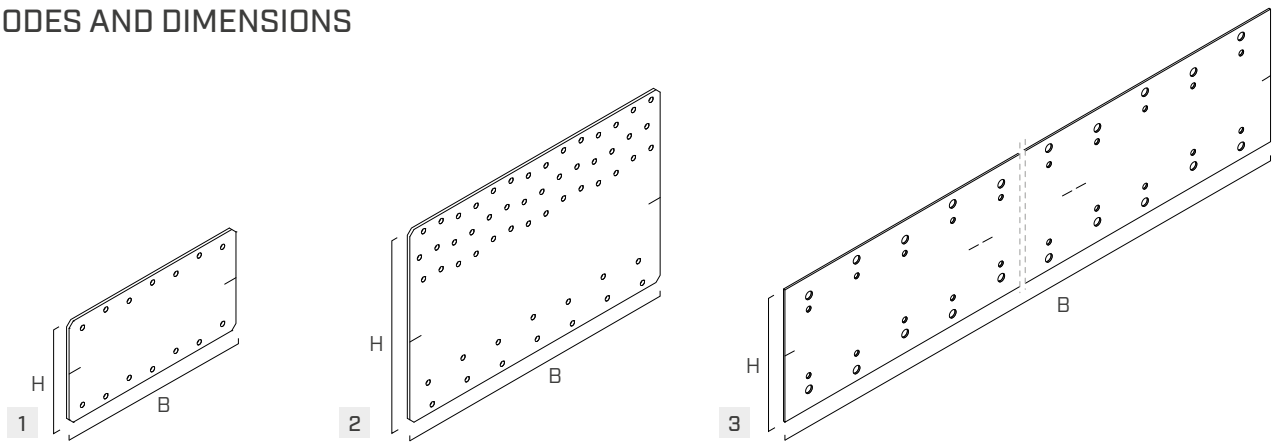

	CODE	B [mm]	H [mm]	s [mm]	*B [in]*	*H [in]*	*s [in]*	n_{V1} Ø5 *n_{V1} Ø0.20* [pcs]	n_{V2} Ø5 *n_{V2} Ø0.20* [pcs]	n_{V1} Ø7 *n_{V1} Ø0.28* [pcs]	n_{V2} Ø7 *n_{V2} Ø0.28* [pcs]		pcs
1	**TTP200**	200	105	2,5	*8*	*4 1/8*	*0.10*	7	7	-	-	●	10
2	**TTP300**	300	200	3	*11 3/4*	*8*	*0.12*	42	14	-	-	●	5
3	**TTP1200**(*)	1200	120	1,5	*47 1/4*	*4 3/4*	*0.06*	48	48	48	48	●	5

(*)Not holding UKCA marking.

FASTENERS

type	description		d [mm]	support	page
LBA	high bond nail		4		570
LBS	round head screw		5 - 7		571
LBS HARDWOOD EVO	C4 EVO round head screw on hardwoods		7		572

GEOMETRY

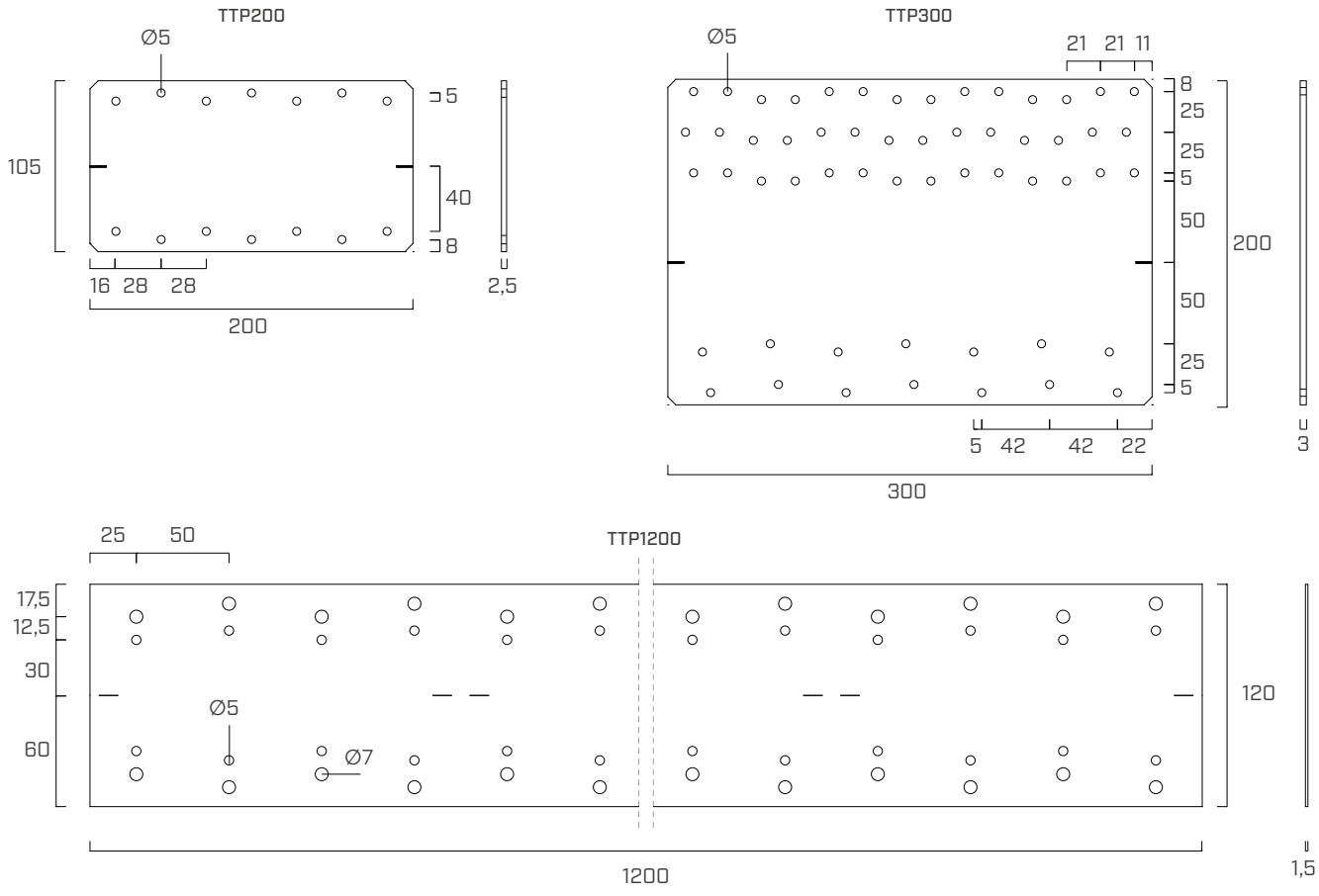

INSTALLATION

TITAN PLATE T plates can be used on both CLT and solid timber/glulam elements and must be positioned with the assembly notches at the timber-to-timber interface.

Possible fastening configurations are shown below:

configuration		fasteners	TTP200	TTP300	TTP1200
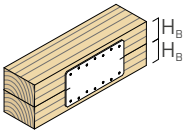	**timber-to-timber**	LBA Ø4	●	●	-
		LBS Ø5	-	●	-
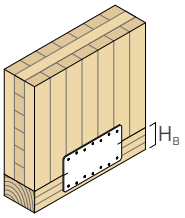	**CLT - timber**	LBA Ø4	●	●	-
		LBS Ø5	-	●	-
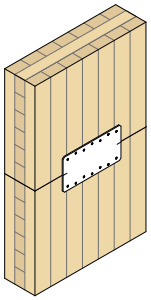	**CLT - CLT** lateral face - lateral face	LBA Ø4	●	●	-
		LBS Ø5	●	●	●
		LBS Ø7 LBSH EVO Ø7	-	-	●
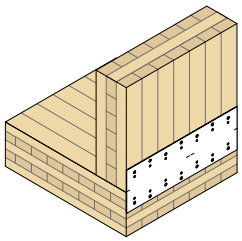	**CLT - CLT** lateral face - narrow face	LBA Ø4	-	-	-
		LBS Ø5	-	-	-
		LBS Ø7 LBSH EVO Ø7	-	-	●
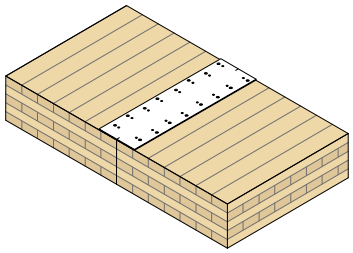	**CLT - CLT** lateral face - lateral face	LBA Ø4	●	●	●
		LBS Ø5	●	●	●
		LBS Ø7 LBSH EVO Ø7	-	-	●

MINIMUM HEIGHT OF H_B ELEMENTS

In the case of fastening on beam/platform beam, the relative minimum HB height of the elements is shown in the table with reference to the installation diagrams.

configuration	fasteners	$H_{B\,min}$ [mm]		
		TTP200	TTP300	
		total	partial	total
timber-to-timber	LBA Ø4	75	110	-
	LBS Ø5	-	130	-
CLT - timber	LBA Ø4	75	110	100
	LBS Ø5	-	130	105

The H_B height is determined taking into account the minimum distances for solid timber or glulam consistent with EN 1995:2014 considering a timber density $\rho_k \leq 420$ kg/m^3.

FASTENING PATTERNS

TTP200

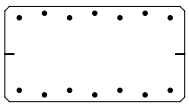

total fastening

TTP300

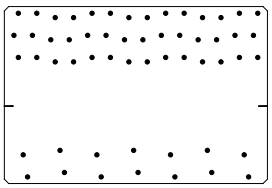

total fastening

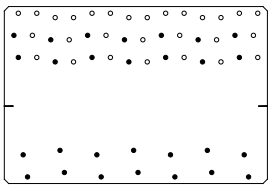

partial fastening

TTP1200

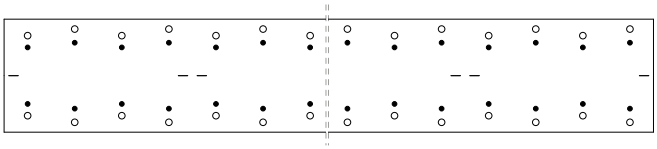

LBA Ø4 - LBS Ø5

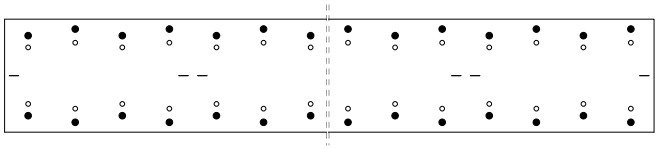

LBS Ø7 - LBSH EVO Ø7

total fastening

24+24 fasteners - spacing 50 mm

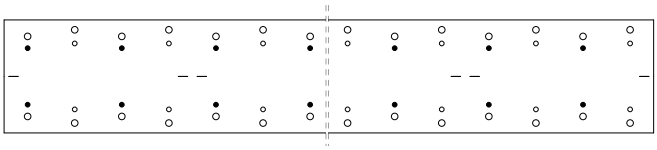

LBA Ø4 - LBS Ø5

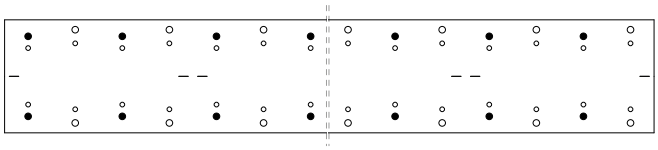

LBS Ø7 - LBSH EVO Ø7

partial fastening

12+12 fasteners - spacing 100 mm

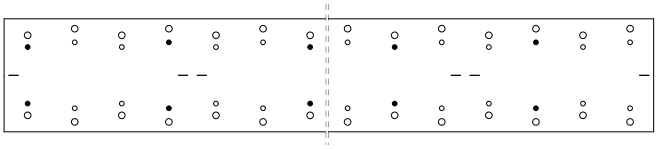

LBA Ø4 - LBS Ø5

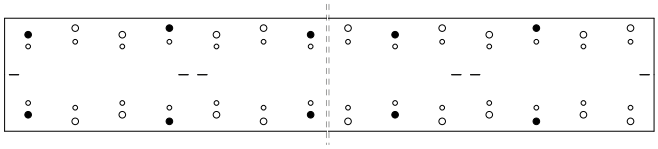

LBS Ø7 - LBSH EVO Ø7

partial fastening

8+8 fasteners - spacing 150 mm

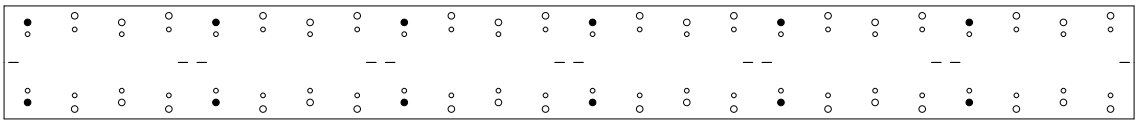

LBS Ø7 - LBSH EVO Ø7

partial fastening

6+ 6 fasteners - spacing 200 mm

STRUCTURAL VALUES | **TTP200** | $F_{2/3}$

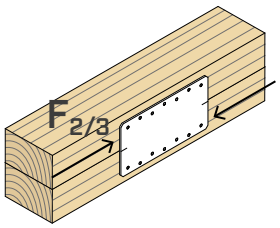

configuration	fastening holes Ø5				$R_{2/3,k\ timber}$ [1]
	type	Ø x L [mm]	n_{V1} [pcs]	n_{V2} [pcs]	[kN]
total fastening	LBA	Ø4 x 60	7	7	**8,8**

STRUCTURAL VALUES | **TTP300** | $F_{2/3}$

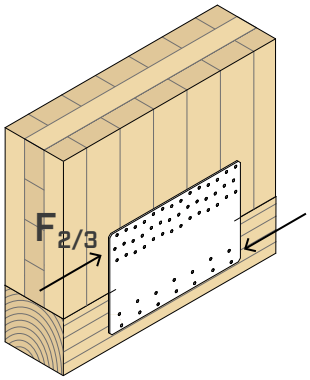

configuration	fastening holes Ø5				$R_{2/3,k\ timber}$ [1]
	type	Ø x L [mm]	n_{V1} [pcs]	n_{V2} [pcs]	[kN]
total fastening	LBA	Ø4 x 60	42	14	**31,7**
	LBS	Ø5 x 60	42	14	**27,7**
partial fastening	LBA	Ø4 x 60	14	14	**17,2**
	LBS	Ø5 x 60	14	14	**15,0**

NOTES

[1] Strength values are valid for all full/partial configurations indicated in the INSTALLATION section.

INTELLECTUAL PROPERTY

- TITAN PLATE T plates are protected by the following Registered Community Designs:
  - RCD 008254353-0015;
  - RCD 008254353-0016;
  - RCD 015051914-0006.

GENERAL PRINCIPLES

- Characteristic values according to EN 1995:2014.
- Design values can be obtained from characteristic values as follows:

$$R_d = \frac{R_{k\ timber} \cdot k_{mod}}{\gamma_M}$$

The coefficients k_{mod}, yM should be taken according to the current regulations used for the calculation.

- A timber density of ρ_k = 350 kg/m^3 was considered for the calculation process.
- Dimensioning and verification of the timber elements must be carried out separately.

STRUCTURAL VALUES | **TTP1200** | $F_{2/3}$

CLT - CLT
lateral face - lateral face

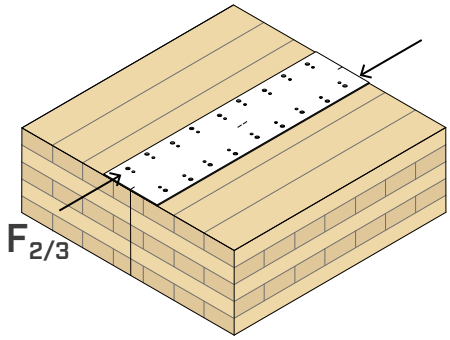

configuration	fastening holes Ø5 type	Ø x L [mm]	n_{V1} [pcs]	n_{V2} [pcs]	$R_{2/3,k\ timber}$ [kN]	$R_{2/3,k\ timber}$ [kN/m](1)
total fastening 24+24 fasteners spacing 50 mm	LBA	Ø4 x 60	24	24	**58,8**	***49,0***
	LBS	Ø5 x 60	24	24	**48,3**	***40,3***
	LBS	Ø7 x 100	24	24	**74,8**	***62,3***
	LBSH EVO	Ø7 x 120	24	24	**91,3**	***76,1***
partial fastening 12+12 fasteners spacing 100 mm	LBA	Ø4 x 60	12	12	**29,8**	***24,9***
	LBS	Ø5 x 60	12	12	**24,5**	***20,4***
	LBS	Ø7 x 100	12	12	**38,1**	***31,8***
	LBSH EVO	Ø7 x 120	12	12	**46,6**	***38,8***
partial fastening 8+8 fasteners spacing 150 mm	LBA	Ø4 x 60	8	8	**19,8**	***16,5***
	LBS	Ø5 x 60	8	8	**16,3**	***13,6***
	LBS	Ø7 x 100	8	8	**25,3**	***21,0***
	LBSH EVO	Ø7 x 120	8	8	**30,8**	***25,7***
partial fastening 6+6 fasteners spacing 200	LBS	Ø7 x 100	6	6	**19,3**	***16,1***
	LBSH EVO	Ø7 x 120	6	6	**23,6**	***19,6***

(1)It is possible to cut the plate into modules with a length of 600 mm. The strength in kN/m remains unchanged.

CLT - CLT
lateral face - narrow face

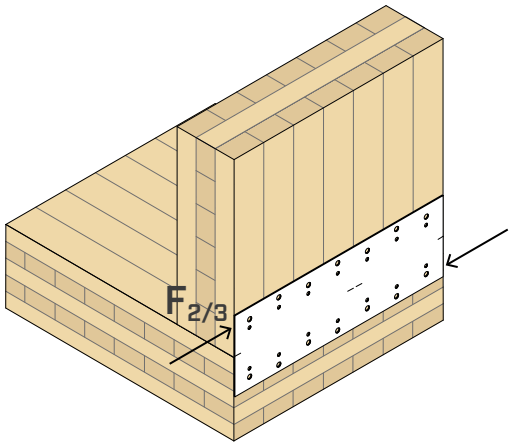

configuration	fastening holes Ø5 type	Ø x L [mm]	n_{V1} [pcs]	n_{V2} [pcs]	$R_{2/3,k\ timber}$ [kN]	$R_{2/3,k\ timber}$ [kN/m](1)
total fastening 24+24 fasteners spacing 50 mm	LBS	Ø7 x 100	24	24	**49,2**	***41,0***
	LBSH EVO	Ø7 x 120	24	24	**59,2**	***49,3***
partial fastening 12+12 fasteners spacing 100 mm	LBS	Ø7 x 100	12	12	**25,1**	***20,9***
	LBSH EVO	Ø7 x 120	12	12	**30,2**	***25,2***

(1)It is possible to cut the plate into modules with a length of 600 mm. The strength in kN/m remains unchanged.



Structural connection elements in digital format

Complete with three-dimensional geometric characteristics and additional parametric information, they are ready to be integrated into your project and available in IFC, REVIT, ALLPLAN, ARCHICAD and TEKLA formats.

BUILDING INFORMATION MODELING

Download them now!

rothoblaas.com

rothoblaas

Solutions for Building Technology

WHT PLATE C CONCRETE

PLATE FOR TENSILE LOADS

UK CA EN 14545 CE EN 14545

SERVICE CLASS	SC1 SC2
MATERIAL	
DX51D Z275	DX51D + Z275 carbon steel
EXTERNAL LOADS	

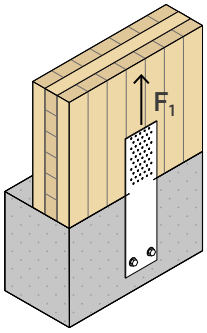

TWO VERSIONS

WHT PLATE 440, ideal for platform frame structures; WHT PLATE 540, ideal for CLT panel structures.

LIGHT TIMBER FRAME

The new partial nailing for the WHTPLATE440 model is optimal for frame walls with a thickness of 60 mm.

QUALITY

The high tensile strength allows to optimize the number of plates installed, ensuring remarkable time saving.
Values calculated and certified according to CE marking.

USA, Canada and more design values available online.

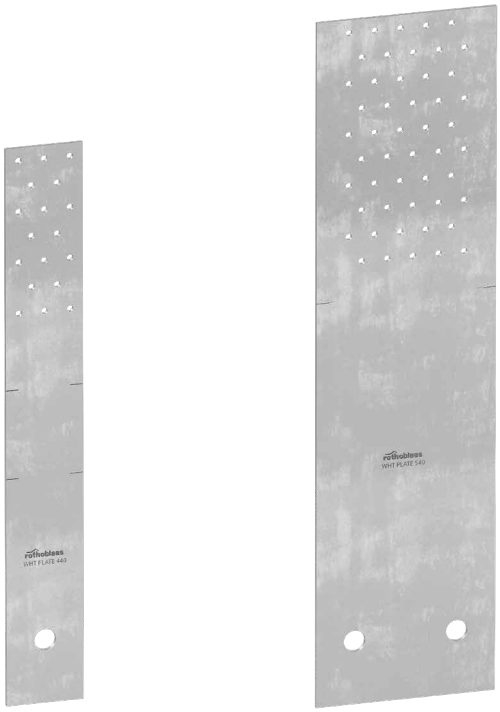

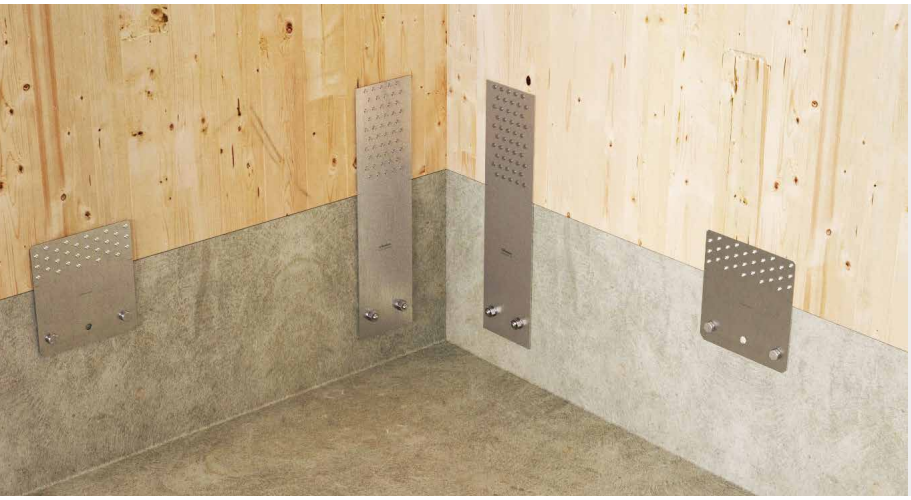

FIELDS OF USE

Tensile joints for timber walls.
Timber-to-concrete or timber to-steel configurations.
Suitable for walls aligned to the concrete edge.

Can be applied to:

- solid timber and glulam
- timber frame
- CLT and LVL panels



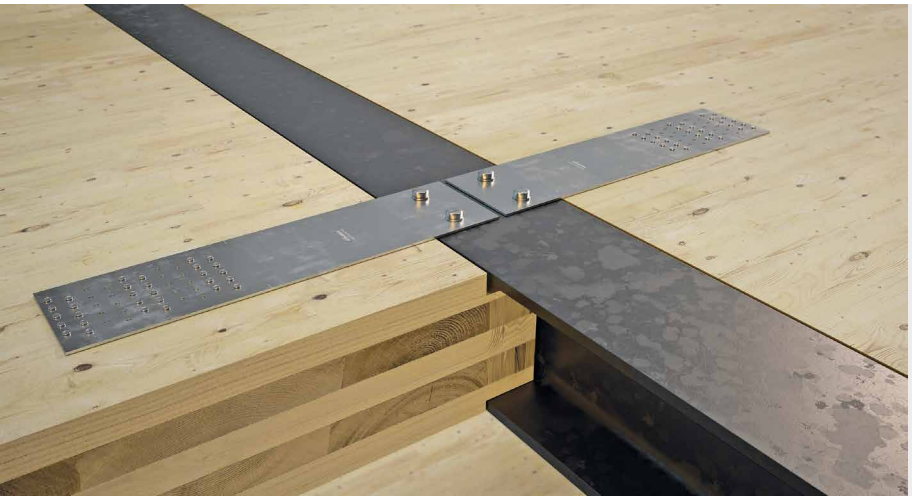

TIMBER-TO-CONCRETE

Beside its natural function, it is ideal for solving situations where the transfer of tensile loads from timber to concrete is required.

HYBRID STRUCTURES

Within hybrid timber-to-steel structures, it can be used for tensile connections by simply aligning the edge of the timber with the edge of the steel element.

CODES AND DIMENSIONS

CODE	B [mm]	H [mm]	holes [mm]	s [mm]	*B [in]*	*H [in]*	*holes [in]*	*s [in]*	n_V Ø5 *n_V Ø.20* [pcs]		pcs
WHTPLATE440	60	440	Ø17	3	*2 3/8*	*17 1/4*	*Ø0.67*	*0.12*	18	●	10
WHTPLATE540	140	540	Ø17	3	*5 1/2*	*21 1/4*	*Ø0.67*	*0.12*	50	●	10

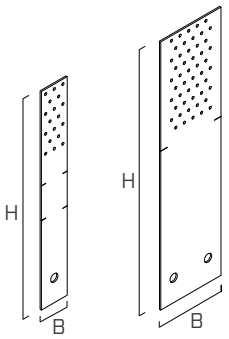

FASTENERS

type	description		d [mm]	support	page
LBA	high bond nail		4		570
LBS	round head screw		5		571
AB1	CE1 expansion anchor		16		536
VIN-FIX	vinyl ester chemical anchor		M16		545
HYB-FIX	hybrid chemical anchor		M16		552
KOS	hexagonal head bolt		M16		168

GEOMETRY

WHTPLATE440

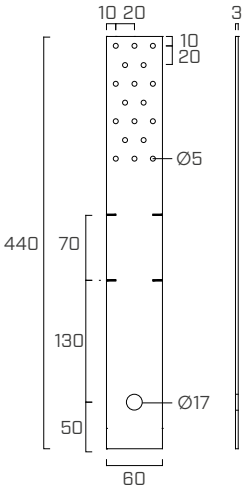

WHTPLATE540

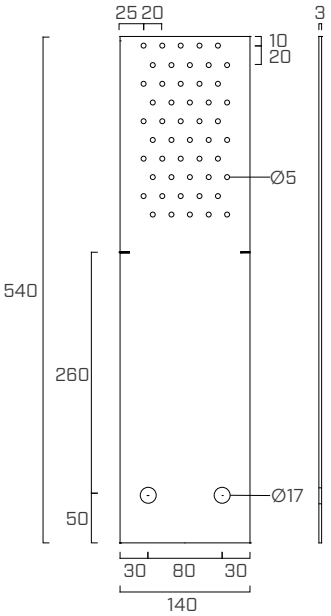

INSTALLATION

MINIMUM DISTANCES

TIMBER minimum distances			nails LBA Ø4	screws LBS Ø5
C/GL	$a_{4,c}$	[mm]	≥ 20	≥ 25
	$a_{3,t}$	[mm]	≥ 60	≥ 75
CLT	$a_{4,c}$	[mm]	≥ 12	≥ 12,5
	$a_{3,t}$	[mm]	≥ 40	≥ 30

- C/GL: minimum distances for solid timber or glulam consistent with EN 1995:2014 according to ETA considering a timber density $\rho_k \leq 420$ kg/m^3
- CLT: minimum distances for Cross Laminated Timber according to ÖNORM EN 1995:2014 (Annex K) for nails and ETA-11/0030 for screws

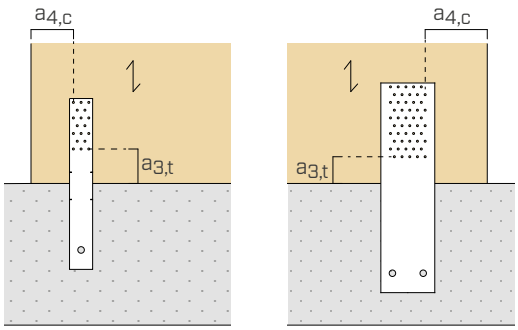

FASTENING PATTERNS

WHTPLATE440

The WHT PLATE 440 can be used for different construction systems (CLT/timber frame) and ground connection systems (with/without platform beam, with/without grout). Depending on the presence and dimension of H_B of the intermediate layer, in accordance with the minimum distances of the timber and concrete fasteners, the WHT PLATE 440 must be positioned in way that the anchor is at a distance from the concrete edge:

$$130 \text{ mm} \leq c_x \leq 200 \text{ mm}$$

INSTALLATION ON TIMBER FRAME

wide pattern

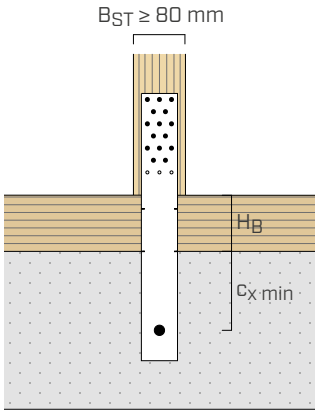

15 fasteners
LBA Ø4 x 60

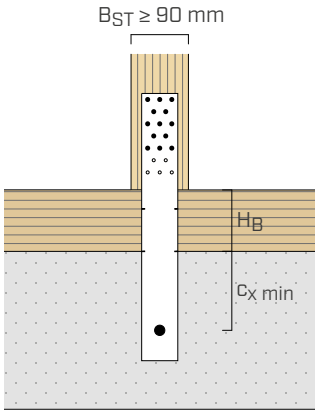

13 fasteners
LBS Ø5 x 60

narrow pattern

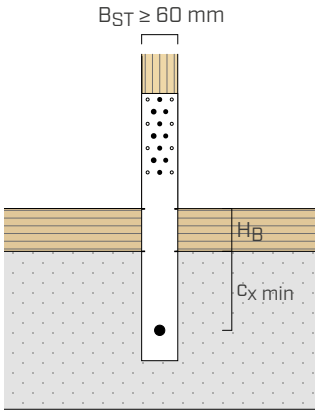

10 fasteners
LBA Ø4 x 60

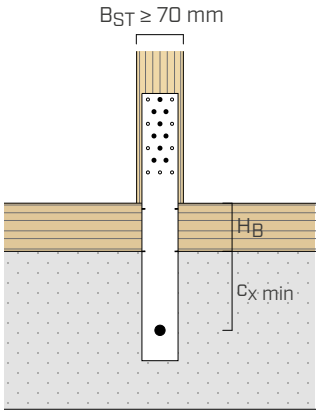

9 fasteners
LBS Ø5 x 60

INSTALLATION ON CLT

wide pattern

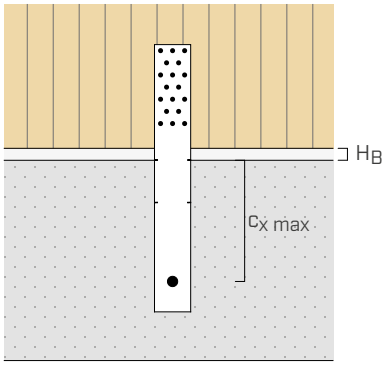

18 fasteners
LBA Ø4 x 60 | LBS Ø5 x 60

c_x [mm]
$c_{x\,min}$ = 130
$c_{x\,max}$ = 200

It is possible to install the angle bracket in two specific patterns:
- **wide pattern**: installation of connectors on all columns of the vertical flange;
- **narrow pattern**: installation with narrow nailing, leaving the outermost columns free.

WHTPLATE540

INSTALLATION ON CLT

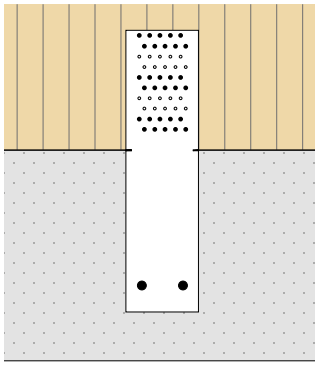

30 fasteners
partial fastening
LBA Ø4 x 60 | LBS Ø5 x 60

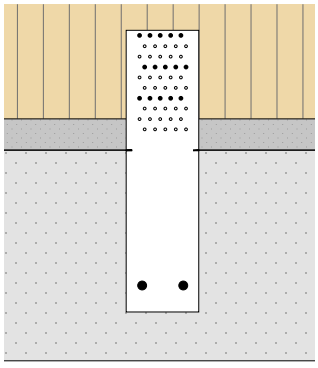

15 fasteners
partial fastening
LBA Ø4 x 60 | LBS Ø5 x 60

In the presence of design requirements such as varying stress values or the presence of a **grout** between the wall and the support surface, it is possible to use pre-calculated and optimised **partial nailing** in order to influence the effective n_{ef} number of fastenings on timber. Alternative nailings are possible in accordance with the minimum distances for the connectors.

STRUCTURAL VALUES | **WHTPLATE440** | TIMBER-TO-CONCRETE| F_1

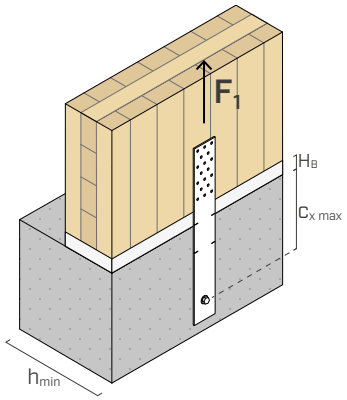

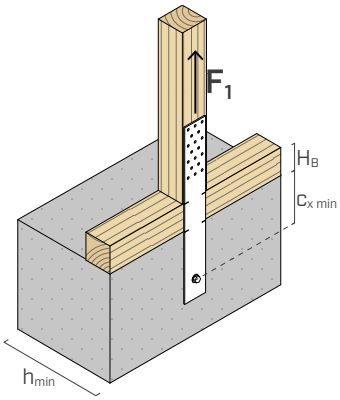

MINIMUM CONCRETE THICKNESS hmin ≥ 200 mm

		TIMBER				STEEL		CONCRETE					
configuration	**pattern**	**fastening holes Ø5**			**$R_{1,k}$ timber**	**$R_{1,k}$ steel**		**$R_{1,d}$ uncracked**		**$R_{1,d}$ cracked**		**$R_{1,d}$ seismic**	
		Ø x L	**n_V**	**$H_{B\ max}$**				VIN-FIX 5.8 **Ø x L**		VIN-FIX 5.8 **Ø x L**		HYB-FIX 8.8 **Ø x L**	
		[mm]	[pcs]	[mm]	[kN]	[kN]	γ_{steel}	[mm]	[kN]	[mm]	[kN]	[mm]	[kN]
$c_{x\ max}$ = 200 mm	wide pattern	LBA Ø4 x 60	18	20	**39,6**	**34,8**	γ_{M2}	M16 x 195	**32,3**	M16 x 195	**22,9**	M16 x 195	**22,9**
		LBS Ø5 x 60	18	30	**31,8**								
$c_{x\ min}$ = 130 mm	wide pattern	LBA Ø4 x 60	15	90	**34,0**	**34,8**	γ_{M2}	M16 x 195	**22,6**	M16 x 195	**16,0**	M16 x 195	**16,0**
		LBS Ø5 x 60	13	95	**24,5**								
$c_{x\ min}$ = 130 mm	narrow pattern	LBA Ø4 x 60	10	70	**22,3**	**34,8**	γ_{M2}	M16 x 195	**22,6**	M16 x 195	**16,0**	M16 x 195	**16,0**
		LBS Ø5 x 60	9	75	**17,5**								

MINIMUM CONCRETE THICKNESS h_{min} ≥ 150 mm

		TIMBER				STEEL		CONCRETE					
configuration	**pattern**	**fastening holes Ø5**			**$R_{1,k}$ timber**	**$R_{1,k}$ steel**		**$R_{1,d}$ uncracked**		**$R_{1,d}$ cracked**		**$R_{1,d}$ seismic**	
		Ø x L	**n_V**	**$H_{B\ max}$**				VIN-FIX 5.8 **Ø x L**		VIN-FIX 5.8 **Ø x L**		HYB-FIX 8.8 **Ø x L**	
		[mm]	[pcs]	[mm]	[kN]	[kN]	γ_{steel}	[mm]	[kN]	[mm]	[kN]	[mm]	[kN]
$c_{x\ max}$ = 200 mm	wide pattern	LBA Ø4 x 60	18	20	**39,6**	**34,8**	γ_{M2}	M16 x 130	**26,0**	M16 x 130	**18,4**	M16 x 130	**18,4**
		LBS Ø5 x 60	18	30	**31,8**								
$c_{x\ min}$ = 130 mm	wide pattern	LBA Ø4 x 60	15	90	**34,0**	**34,8**	γ_{M2}	M16 x 130	**18,2**	M16 x 130	**12,9**	M16 x 130	**12,9**
		LBS Ø5 x 60	13	95	**24,5**								
$c_{x\ min}$ = 130 mm	narrow pattern	LBA Ø4 x 60	10	70	**22,3**	**34,8**	γ_{M2}	M16 x 130	**18,2**	M16 x 130	**12,9**	M16 x 130	**12,9**
		LBS Ø5 x 60	9	75	**17,5**								

STRUCTURAL VALUES | **WHTPLATE540** | TIMBER-TO-CONCRETE| F_1

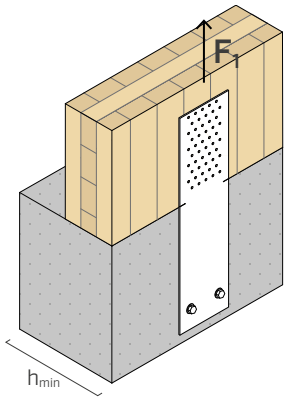

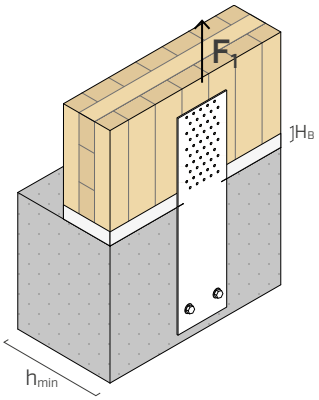

MINIMUM CONCRETE THICKNESS hmin ≥ 200 mm

configuration	pattern	TIMBER				STEEL		CONCRETE[2]					
		fastening holes Ø5			$R_{1,k\ timber}$	$R_{1,k\ steel}$		$R_{1,d\ uncracked}$		$R_{1,d\ cracked}$		$R_{1,d\ seismic}$	
		Ø x L	n_V	$H_{B\ max}$				VIN-FIX 5.8 Ø x L		VIN-FIX 5.8 Ø x L		HYB-FIX 8.8 Ø x L	
		[mm]	[pcs]	[mm]	[kN]	[kN]	γ_{steel}	[mm]	[kN]	[mm]	[kN]	[mm]	[kN]
partial fastening[1] 2 anchors M16	30 fasteners	LBA Ø4 x 60	30	-	**84,9**	**70,6**	γ_{M2}	M16 x 195	**44,1**	M16 x 195	**31,3**	M16 x 195	**26,6**
		LBS Ø5 x 60	30	10	**69,9**								
partial fastening[1] 2 anchors M16	15 fasteners	LBA Ø4 x 60	15	60	**42,5**	**70,6**	γ_{M2}	M16 x 195	**44,1**	M16 x 195	**31,3**	M16 x 195	**26,6**
		LBS Ø5 x 60	15	70	**35,0**								

MINIMUM CONCRETE THICKNESS hmin ≥ 150 mm

configuration	pattern	TIMBER				STEEL		CONCRETE[2]					
		fastening holes Ø5			$R_{1,k\ timber}$	$R_{1,k\ steel}$		$R_{1,d\ uncracked}$		$R_{1,d\ cracked}$		$R_{1,d\ seismic}$	
		Ø x L	n_V	$H_{B\ max}$				VIN-FIX 5.8 Ø x L		VIN-FIX 5.8 Ø x L		HYB-FIX 8.8 Ø x L	
		[mm]	[pcs]	[mm]	[kN]	[kN]	γ_{steel}	[mm]	[kN]	[mm]	[kN]	[mm]	[kN]
partial fastening[1] 2 anchors M16	30 fasteners	LBA Ø4 x 60	30	-	**84,9**	**70,6**	γ_{M2}	M16 x 130	**35,9**	M16 x 130	**25,4**	M16 x 130	**21,6**
		LBS Ø5 x 60	30	10	**69,9**								
partial fastening[1] 2 anchors M16	15 fasteners	LBA Ø4 x 60	15	60	**42,5**	**70,6**	γ_{M2}	M16 x 130	**35,9**	M16 x 130	**25,4**	M16 x 130	**21,6**
		LBS Ø5 x 60	15	70	**35,0**								

NOTES

[1] In the case of configurations with partial nailing, the strength values in the table are valid for the installation of fasteners in timber in accordance with $a_1 > 10d$ ($n_{ef} = n$).

[2] The concrete strength values are valid if the assembly notches of the WHT-PLATE540 plate are positioned at the timber-to-concrete interface (c_x = 260 mm).

ANCHORS INSTALLATION PARAMETERS

anchor type		t_{fix}	$h_{nom} = h_{ef}$	h_1	d_0	h_{min}
type	**Ø x L** [mm]	[mm]	[mm]	[mm]	[mm]	[mm]
VIN-FIX 5.8	M16 x 130	3	110	115	18	150
HYB-FIX 8.8	M16 x 195	3	164	170		200

Precut INA threaded rod, with nut and washer: see page 562.
MGS threaded rod class 8.8 to be cut to size: see page 174.

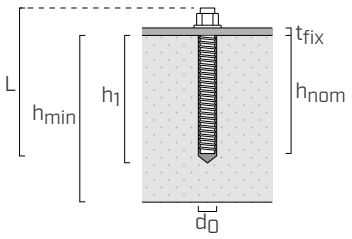

t_{fix}	fastened plate thickness
h_{nom}	nominal anchoring depth
h_1	minimum hole depth
d_0	hole diameter in the concrete support
h_{min}	concrete minimum thickness

DIMENSIONING OF ALTERNATIVE ANCHORS

Fastening elements to the concrete through anchors not listed in the table, shall be verified according to the load acting on the anchors, which can be evaluated through the $k_{t\perp//}$ coefficients. The lateral shear load acting on the anchor can be obtained as follows:

$$F_{bolt\perp,d} = k_{t\perp} \cdot F_{1,d}$$

$k_{t\perp}$	coefficient of eccentricity
F_1	tensile stress acting on the WHT PLATE

The anchor check is satisfied if the design tensile strength, obtained considering the boundary effects, is greater than the design external load: $R_{bolt\perp,d} \geq F_{bolt\perp,d}$.

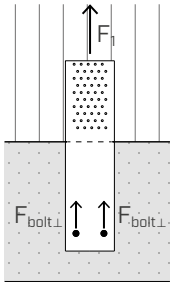

	$k_{t\perp}$
WHTPLATE440	1,00
WHTPLATE540	0,50

GENERAL PRINCIPLES

- Characteristic values according to EN 1995:2014.
- Design values can be obtained from characteristic values as follows:

$$R_d = min \begin{cases} \frac{R_{k,\ timber} \cdot k_{mod}}{\gamma_M} \\ \frac{R_{k,\ steel}}{\gamma_{M2}} \\ R_{d,\ concrete} \end{cases}$$

  The coefficients k_{mod}, γ_M and γ_{M2} should be taken according to the current regulations used for the calculation.
- The timber strength values $R_{1,k\ timber}$ are calculated considering the effective number according to Table 8.1 (EN 1995:2014).
- The calculation process used a timber characteristic density of ρ_k = 350 kg/m^3 and C25/30 concrete with a thin reinforcing layer and minimum thickness indicated in the relative tables.
- Concrete design strength values are supplied for uncracked ($R_{1,d\ uncracked}$), cracked ($R_{1,d\ cracked}$) concrete and in case of seismic verification ($R_{1,d\ seismic}$) for use of chemical anchor with threaded rod in steel class 8.8.
- Seismic design in performance category C2, without ductility requirements on anchors (option a2 and elastic design according to EN 1992:2018). For chemical anchors it is assumed that the annular space between the anchor and the plate hole is filled (α_{gap} = 1).
- The strength values are valid for the calculation hypothesis defined in the table; for boundary conditions different from the ones in the table (e.g. minimum distances from the edge), the concrete anchor group can be verified using MyProject calculation software according to the design requirements.
- Dimensioning and verification of timber and concrete elements must be carried out separately.
- The product ETAs for the anchors used in the concrete-side strength calculation are indicated below:
  - VIN-FIX chemical anchor according to ETA-20/0363
  - HYB-FIX chemical anchor according to ETA-20/1285



ADD YOUR LOGO!

Chic, not shock

Construction site safety has a unique style: yours.
You can now request customisation of Rothoblaas helmets by adding your logo.
Choose colours, accessories and combinations with us.

AVAILABLE COLOURS:





Contact your agent for more information

rothoblaas.com

rothoblaas
Solutions for Building Technology

WHT PLATE T TIMBER

PLATE FOR TENSILE LOADS

DESIGN REGISTERED

UK CA EN 14545

CE EN 14545

COMPLETE RANGE

Available in five versions of different thickness, material and height. HBS PLATE screws enable fast and safe assembly.

TENSION

Ready-to-use plates: calculated, certified for tensile loads on timber-to-timber joints. Available in five different strength levels.

EARTHQUAKE AND MULTISTORY

Ideal for the design of multi-storey buildings for different floor thickness values. Characteristic tensile strength of more than 200 kN.

USA, Canada and more design values available online.

SERVICE CLASS SC1 SC2

MATERIAL

S350 Z275 **WHTPT300** e **WHTPT530**: S350GD + Z275 carbon steel

S355 Fe/Zn12c **WHTPT600, WHTPT720 and WHTPT820**: S355 + Fe/Zn12c carbon steel

EXTERNAL LOADS

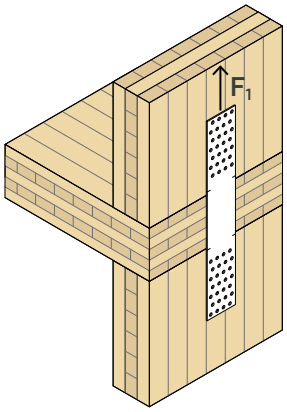

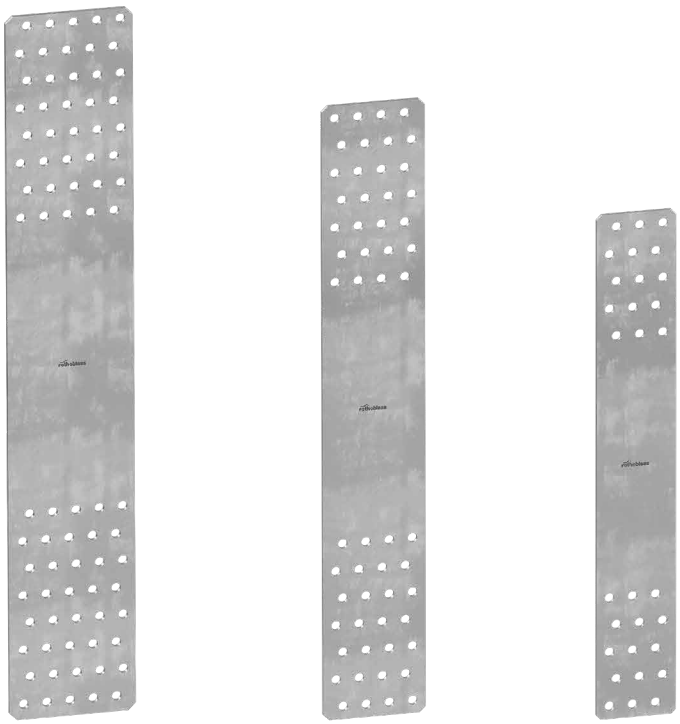





FIELDS OF USE

Tensile joints for timber walls, beams or floors. Timber-to-timber configuration.

Can be applied to:

- solid timber and glulam
- CLT and LVL panels

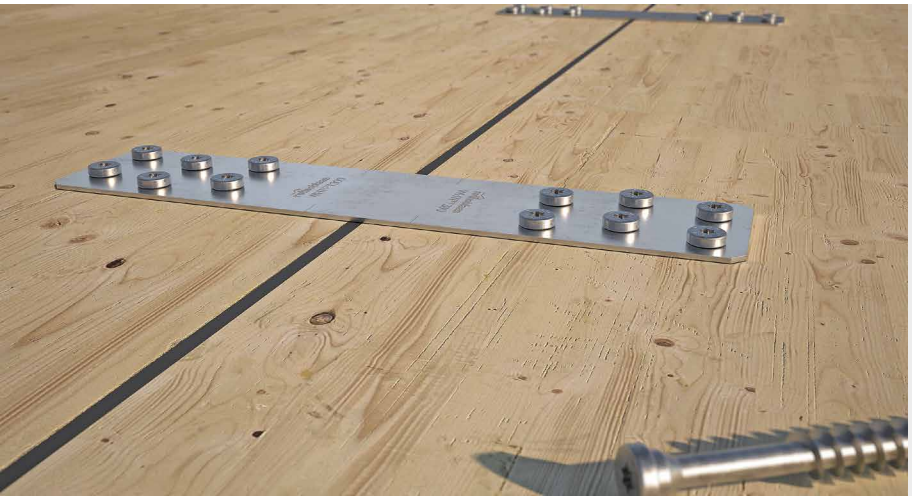

HBS PLATE

Ideal in combination with HBS PLATE or HBS PLATE EVO screws to securely and reliably fasten plates to timber. Disassembling the connection at the end of its life is quick and safe.

FLOOR JOINTS

The new models TTP530 and TTP300 are also suitable for tensile joints between CLT panels in floors.

CODES AND DIMENSIONS

WHT PLATE T

CODE	H	B	s	*H*	*B*	*s*	n_V Ø11 *n_V Ø0.44*	pcs
	[mm]	[mm]	[mm]	*[in]*	*[in]*	*[in]*	[pcs]	
WHTPT300(*)	300	67	2	*11 3/4*	*2 5/8*	*0.08*	6 + 6	10
WHTPT530(*)	530	67	2,5	*20 7/8*	*2 5/8*	*0.10*	8 + 8	10
WHTPT600	594	91	3	*23 3/8*	*3 9/16*	*0.12*	15 + 15	10
WHTPT720	722	118	4	*28 7/16*	*4 5/8*	*0.16*	28 + 28	5
WHTPT820	826	145	5	*32 1/2*	*5 11/16*	*0.20*	40 + 40	1

(*)Not holding UKCA marking.

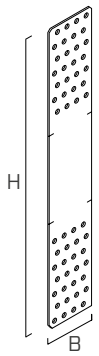

HBS PLATE

CODE	d_1	L	b	*d_1*	*L*	*b*	TX	pcs
	[mm]	[mm]	[mm]	*[in]*	*[in]*	*[in]*		
HBSPL880	8	80	55	*0.32*	*3 1/8*	*2 3/16*	TX40	100
HBSPL8100	8	100	75	*0.32*	*4*	*2 15/16*	TX40	100

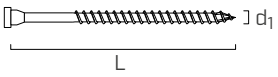

GEOMETRY

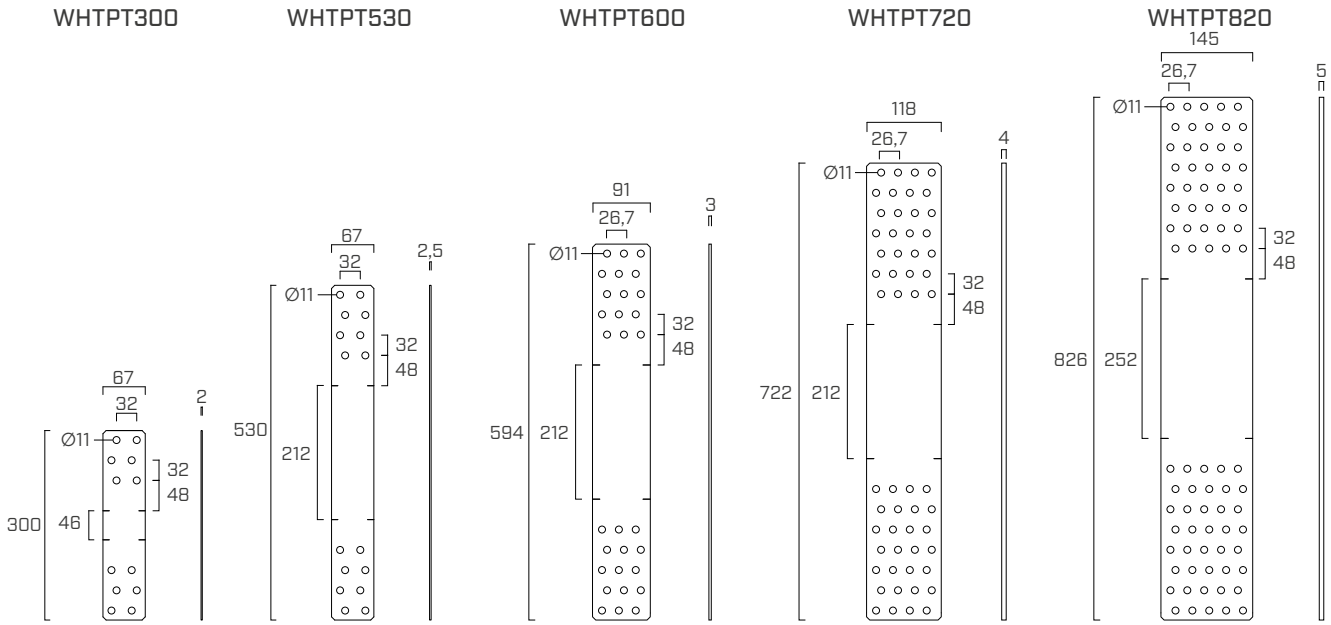

INSTALLATION

MINIMUM DISTANCES | INSTALLATION ON WALL

TIMBER minimum distances			screws HBS PLATE Ø8
CLT	$a_{4,c}$	[mm]	≥ 20
	$a_{3,t}$	[mm]	≥ 48

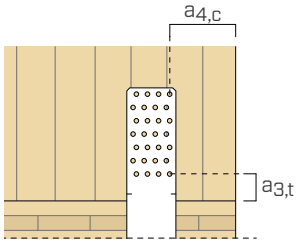

MINIMUM DISTANCES | INSTALLATION ON FLOOR

By using the WHTPT300 and WHTPT530 plates, the tensile connection between floors can be implemented. The minimum distances for this application are as follows:

TIMBER minimum distances			screws HBS PLATE Ø8
CLT	$a_{4,t}$	[mm]	≥ 48
	$a_{3,c}$	[mm]	≥ 48

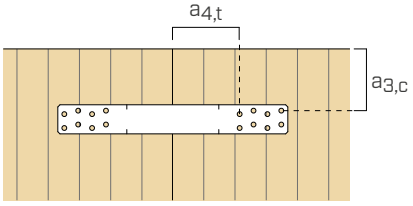

MAXIMUM DISTANCE BETWEEN PANELS D_{max}

WHT PLATE T plates are designed for different floor thickness values including resilient acoustic profile. The positioning notches, as an assembly aid, indicate the maximum permitted distance (D) between the CLT wall panels in compliance with the minimum distances for HBS PLATE Ø8 mm screws. This distance includes the space required for the acoustic profile housing ($s_{acoustic}$).

CODE	D_{max} [mm]	H_{max} floor [mm]	$s_{acoustic}$ [mm]
WHTPT300	46	-	-
WHTPT530	212	200	6 + 6
WHTPT600	212	200	6 + 6
WHTPT720	212	200	6 + 6
WHTPT820	252	240	6 + 6

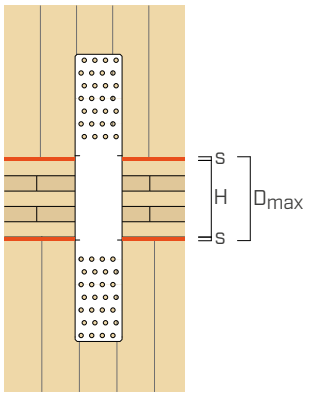

STRUCTURAL VALUES | TIMBER-TO-TIMBER | F_1

CODE	TIMBER			STEEL	
	fastening holes Ø11		$R_{1,k\ timber}$	$R_{1,k\ steel}$	
	HBS PLATE Ø x L [mm]	n_V [pcs]	[kN]	[kN]	γ_{steel}
WHTPT300	Ø8 x 80	6+6	**23,0**	**34,0**	γ_{M2}
	Ø8 x 100	6+6	**28,9**		
WHTPT530	Ø8 x 80	8+8	**30,5**	**42,5**	γ_{M2}
	Ø8 x 100	8+8	**38,4**		
WHTPT600	Ø8 x 80	15 + 15	**56,8**	**80,3**	γ_{M2}
	Ø8 x 100	15 + 15	**71,6**		
WHTPT720	Ø8 x 80	28 + 28	**104,7**	**135,9**	γ_{M2}
	Ø8 x 100	28 + 28	**132,3**		
WHTPT820	Ø8 x 80	40 + 40	**166,7**	**206,6**	γ_{M2}
	Ø8 x 100	40 + 40	**202,7**		

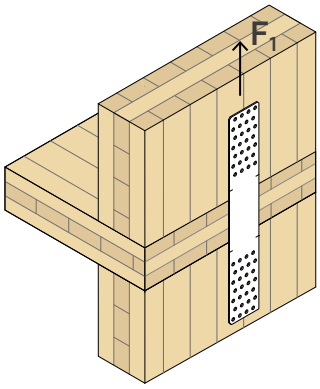

GENERAL PRINCIPLES

- Characteristic values comply with the EN 1995:2014 standard in accordance with ETA-11/0030.
- Design values can be obtained from characteristic values as follows:

$$R_d = min \begin{cases} \frac{R_{k\ timber} \cdot k_{mod}}{\gamma_M} \\ \frac{R_{k\ steel}}{\gamma_{M2}} \end{cases}$$

The coefficients k_{mod}, γ_M and γ_{M2} should be taken according to the current regulations used for the calculation.

- A timber density of ρ_k = 350 kg/m^3 was considered for the calculation process.
- Dimensioning and verification of the timber elements must be carried out separately.

INTELLECTUAL PROPERTY

- WHT PLATE T plates are protected by the following Registered Community Designs:
  - RCD 008254353-0019;
  - RCD 008254353-0020;
  - RCD 008254353-0021;
  - RCD 015051914-0007;
  - RCD 015051914-0008.

VGU PLATE T TIMBER

PLATE FOR TENSILE LOADS

DESIGN REGISTERED

UK CA EN 14545

CE EN 14545

TENSILE CONNECTION

Thanks to the use of VGS screws arranged at 45°, the high tensile forces can be transferred in a small space. Strength over 90 kN.

EASY INSTALLATION

The plate is equipped with slots for housing the VGU washers that allow the VGS screws to be inserted at 45°.

AUXILIARY HOLES

The 5 mm holes allow the insertion of temporary positioning screws to hold the plate in place during the insertion of the inclined screws.

USA, Canada and more design values available online.

SERVICE CLASS SC1 SC2

MATERIAL

S350 Z275 **VGUPLATET185**: S350GD+Z275

S235 Fe/Zn12c **VGUPLATET350**: S235 + Fe/Zn12c carbon steel

EXTERNAL LOADS

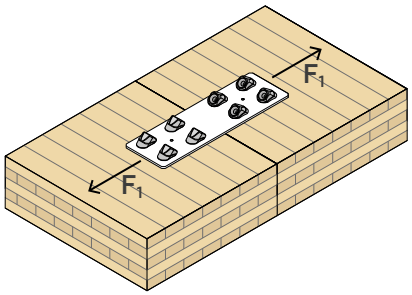

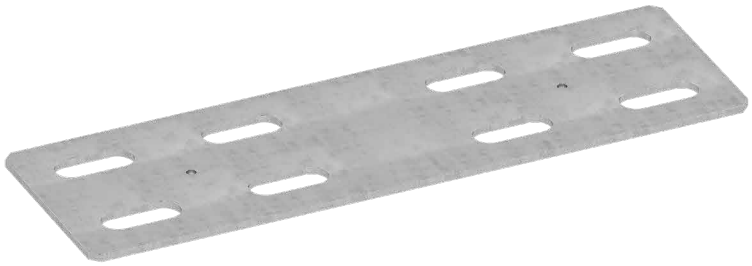

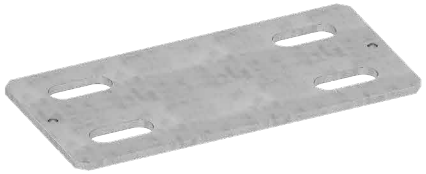

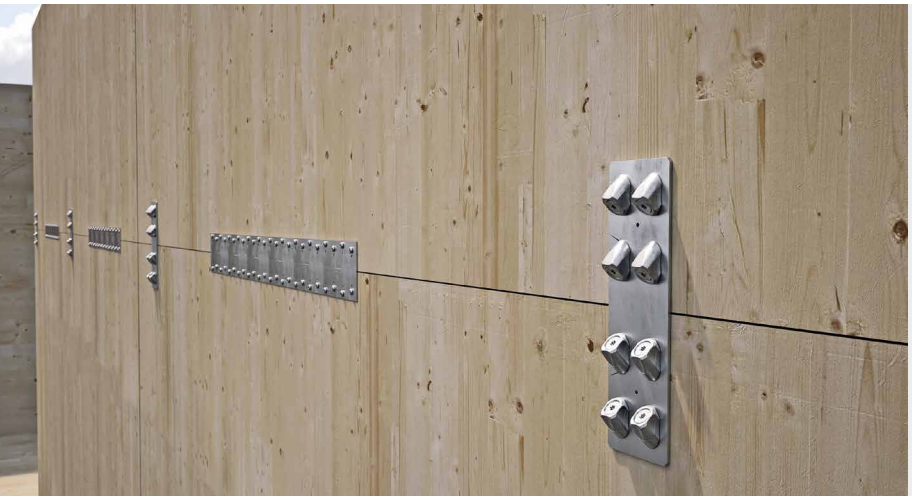

FIELDS OF USE

High-stiffness tensile joints.
Timber-to-timber configuration.

Can be applied to:

- solid timber and glulam
- CLT and LVL panels



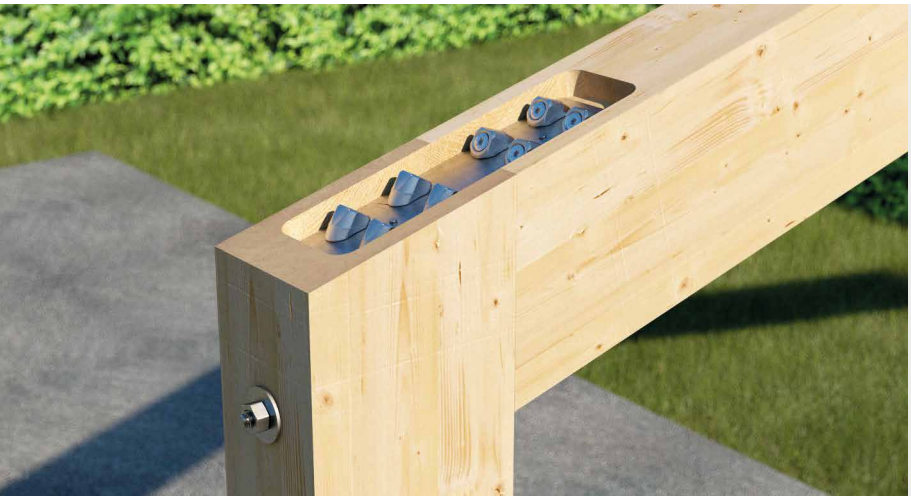

STIFFNESS

It allows the creation of rigid tensile connections in panel floors with diaphragm behaviour.

MOMENT RESISTING JOINT

Small moment joints can be made by breaking it down into a tensile action absorbed by the VGU PLATE T plate and a compressive action absorbed by the timber, as in this case, by the DISC FLAT concealed connector.

CODES AND DIMENSIONS

CODE	B [mm] [in]	L [mm] [in]	s [mm] [in]		pcs
VGUPLATET185	88 *3 7/16*	185 *7 1/4*	3 *0.12*	●	1
VGUPLATET350	108 *4 1/4*	350 *13 3/4*	4 *0.16*	●	1

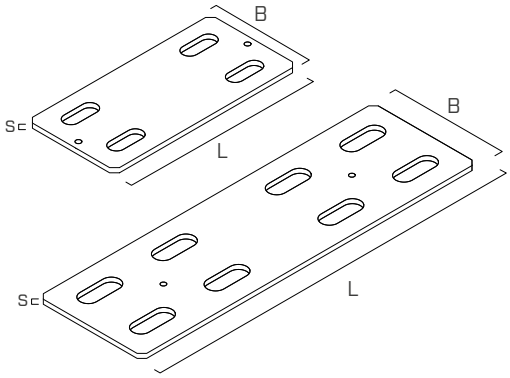

FASTENERS

type	description		d [mm]	support	page
VGS	fully threaded countersunk screw		9-11		575
VGU	45° washer		9-11		569

GEOMETRY

VGUPLATET185

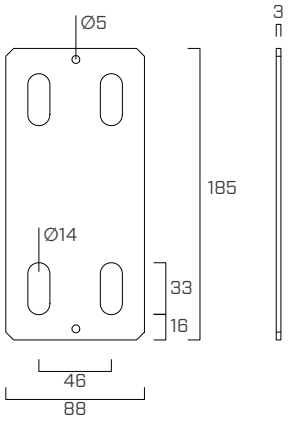

VGUPLATET350

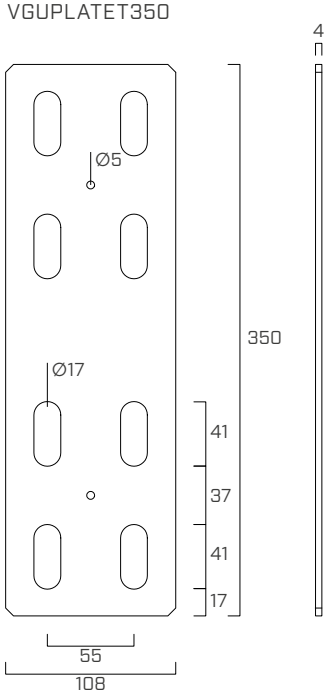

INSTALLATION

MINIMUM DISTANCES

	$Ø_{screw}$ [mm]	$L_{screw,min}$ [1] [mm]	$a_{1,CG}$ [mm]	$a_{2,CG}$ [mm]	$H_{1,min}$ [1] [mm]
VGUPLATET185	9	120	90	36	90
VGUPLATET350	11	175	110	44	125

[1] Valid limit value considering the centerline of the plate centred at the interface of the wooden elements, using all connectors.

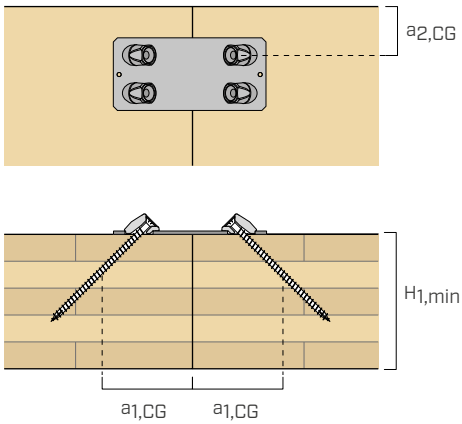

STRUCTURAL VALUES | TIMBER-TO-TIMBER | F_1

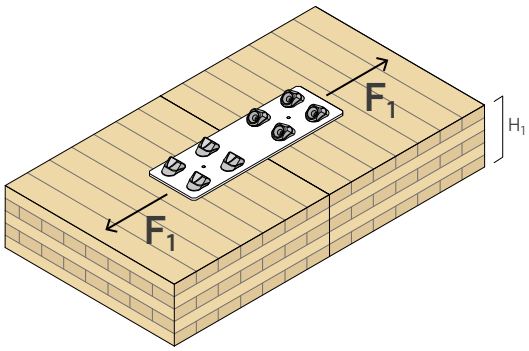

CODE	H_1 [mm]	$R_{1,k\ screw}$ fasteners VGU	VGS - Ø x L [mm]	n_V [pcs]	$R_{1,k\ ax}$ [kN]	$R_{1,k\ tens}$ [kN]	$R_{1,k\ steel\ plate}$ $R_{1,k\ plate}$ [kN]
VGUPLATET185	90	VGU945	9 x 120	2+2	**14,1**	**35,9**	**39,3**
	100		9 x 140	2+2	**17,1**		
	115		9 x 160	2+2	**20,1**		
	130		9 x 180	2+2	**23,1**		
	145		9 x 200	2+2	**26,1**		
	160		9 x 220	2+2	**29,0**		
	170		9 x 240	2+2	**32,0**		
VGUPLATET350	125	VGU1145	11 x 175	4+4	**49,2**	**100,3**	**95,9**
	140		11 x 200	4+4	**57.7**		
	160		11 x 225	4+4	**66,2**		
	175		11 x 250	4+4	**74.7**		
	195		11 x 275	4+4	**83,2**		
	210		11 x 300	4+4	**91,7**		

GENERAL PRINCIPLES

- Characteristic values comply with the EN 1995:2014 standard in accordance with ETA-11/0030.
- Design values can be obtained from characteristic values as follows:

$$R_d = min \begin{cases} \frac{R_{1,k\,ax} \cdot k_{mod}}{\gamma_M} \\ \frac{R_{1,k\,tens}}{\gamma_{M2}} \\ \frac{R_{1,k\,steel}}{\gamma_{M2}} \end{cases}$$

The coefficients k_{mod}, γ_M and γ_{M2} should be taken according to the current regulations used for the calculation.

- A timber density of ρ_k = 350 kg/m^3 was considered for the calculation process.
- Dimensioning and verification of the timber elements must be carried out separately.
- The strength values of the connection system are valid under the calculation hypothesis listed in the table; for different boundary conditions shall be verified.

INTELLECTUAL PROPERTY

- VGU PLATE T plates are protected by the following Registered Community Designs:
  - RCD 008254353-0017;
  - RCD 008254353-0018.

LBV

PERFORATED PLATE

CE
EN 14545



WIDE RANGE

Several versions are available, designed to face all timber construction needs. The LBV plates can create simple beam and joist joints through to the most important inter-story connections.

READY FOR USE

An "off the shelf solution" that meets the most common requirements and minimises installation times. It offers an excellent cost to performance ratio.

EFFICIENCY

The new LBA nails according to ETA-22/0002 achieve excellent strengths with a reduced number of fasteners.

USA, Canada and more design values available online.

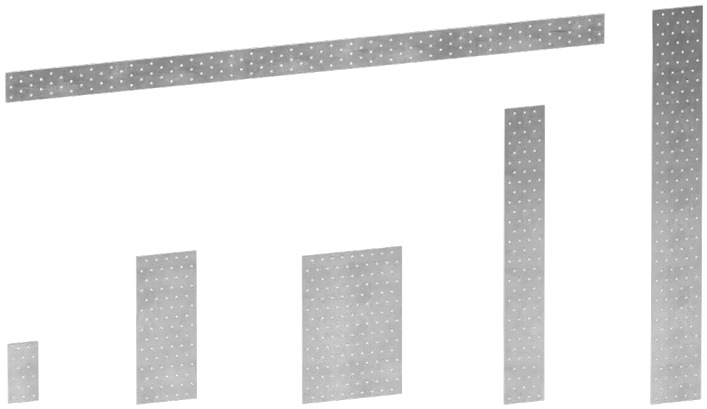

SERVICE CLASS

SC1 SC2

MATERIAL

S250 Z275 S250GD + Z275 carbon steel

THICKNESS [mm]

1,5 mm | 2,0 mm

EXTERNAL LOADS

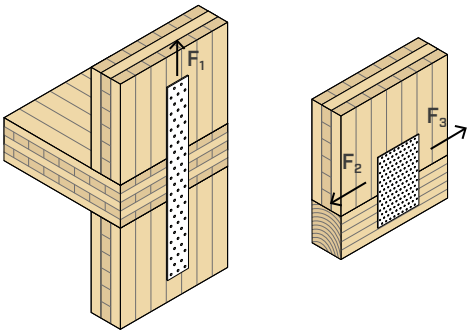



FIELD OF USE

Tension joints with small to medium stresses through a simple and cost-effective solution. Timber-to-timber configuration.

Can be applied to:

- solid timber and glulam
- timber frame
- CLT and LVL panels

CODES AND DIMENSIONS

LBV 1,5 mm

S250 Z275

CODE	B [mm]	H [mm]	s [mm]	*B [in]*	*H [in]*	*s [in]*	n Ø5 *n Ø0.20* [pcs]		pcs
LBV60600	60	600	1,5	*2 3/8*	*23 5/8*	*0.06*	75	●	10
LBV60800	60	800	1,5	*2 3/8*	*31 1/2*	*0.06*	100	●	10
LBV80600	80	600	1,5	*3 1/8*	*23 5/8*	*0.06*	105	●	10
LBV80800	80	800	1,5	*3 1/8*	*31 1/2*	*0.06*	140	●	10
LBV100800	100	800	1,5	*4*	*31 1/2*	*0.06*	180	●	10

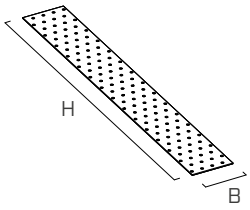

LBV 2,0 mm

S250 Z275

CODE	B [mm]	H [mm]	s [mm]	*B [in]*	*H [in]*	*s [in]*	n Ø5 *n Ø0.20* [pcs]		pcs
LBV40120	40	120	2,0	*1 9/16*	*4 3/4*	*0.08*	9	●	200
LBV40160	40	160	2,0	*1 9/16*	*6 1/4*	*0.08*	12	●	50
LBV60140	60	140	2,0	*2 3/8*	*5 1/2*	*0.08*	18	●	50
LBV60200	60	200	2,0	*2 3/8*	*8*	*0.08*	25	●	100
LBV60240	60	240	2,0	*2 3/8*	*9 1/2*	*0.08*	30	●	100
LBV80200	80	200	2,0	*3 1/8*	*8*	*0.08*	35	●	50
LBV80240	80	240	2,0	*3 1/8*	*9 1/2*	*0.08*	42	●	50
LBV80300	80	300	2,0	*3 1/8*	*11 3/4*	*0.08*	53	●	50
LBV100140	100	140	2,0	*4*	*5 1/2*	*0.08*	32	●	50
LBV100200	100	200	2,0	*4*	*8*	*0.08*	45	●	50
LBV100240	100	240	2,0	*4*	*9 1/2*	*0.08*	54	●	50
LBV100300	100	300	2,0	*4*	*11 3/4*	*0.08*	68	●	50
LBV100400	100	400	2,0	*4*	*15 3/4*	*0.08*	90	●	20
LBV100500	100	500	2,0	*4*	*19 3/4*	*0.08*	112	●	20
LBV120200	120	200	2,0	*4 3/4*	*8*	*0.08*	55	●	50
LBV120240	120	240	2,0	*4 3/4*	*9 1/2*	*0.08*	66	●	50
LBV120300	120	300	2,0	*4 3/4*	*11 3/4*	*0.08*	83	●	50
LBV140400	140	400	2,0	*5 1/2*	*15 3/4*	*0.08*	130	●	15
LBV160400	160	400	2,0	*6 1/4*	*15 3/4*	*0.08*	150	●	15
LBV200300	200	300	2,0	*8*	*11 3/4*	*0.08*	142	●	15

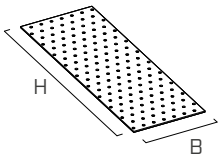

LBV 2,0 x 1200 mm

S250 Z275

CODE	B [mm]	H [mm]	s [mm]	*B [in]*	*H [in]*	*s [in]*	n Ø5 *n Ø0.20* [pcs]		pcs
LBV401200	40	1200	2,0	*1 9/16*	*47 1/4*	*0.08*	90	●	20
LBV601200	60	1200	2,0	*2 3/8*	*47 1/4*	*0.08*	150	●	20
LBV801200	80	1200	2,0	*3 1/8*	*47 1/4*	*0.08*	210	●	20
LBV1001200	100	1200	2,0	*4*	*47 1/4*	*0.08*	270	●	10
LBV1201200	120	1200	2,0	*4 3/4*	*47 1/4*	*0.08*	330	●	10
LBV1401200	140	1200	2,0	*5 1/2*	*47 1/4*	*0.08*	390	●	10
LBV1601200	160	1200	2,0	*6 1/4*	*47 1/4*	*0.08*	450	●	10
LBV1801200	180	1200	2,0	*7 1/8*	*47 1/4*	*0.08*	510	●	10
LBV2001200	200	1200	2,0	*8*	*47 1/4*	*0.08*	570	●	5
LBV2201200	220	1200	2,0	*8 5/8*	*47 1/4*	*0.08*	630	●	5
LBV2401200	240	1200	2,0	*9 1/2*	*47 1/4*	*0.08*	690	●	5
LBV2601200	260	1200	2,0	*10 1/4*	*47 1/4*	*0.08*	750	●	5
LBV2801200	280	1200	2,0	*11*	*47 1/4*	*0.08*	810	●	5
LBV3001200	300	1200	2,0	*11 3/4*	*47 1/4*	*0.08*	870	●	5
LBV4001200	400	1200	2,0	*15 3/4*	*47 1/4*	*0.08*	1170	●	5

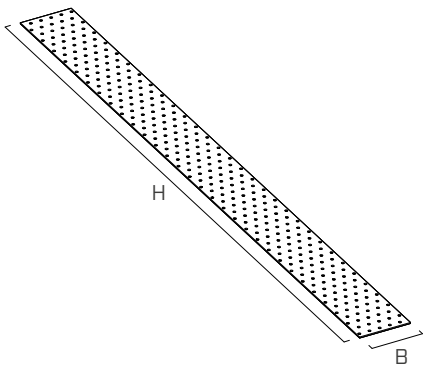

FASTENERS

type	description		d [mm]	support	page
LBA	high bond nail		4		570
LBS	round head screw		5		571

GEOMETRY

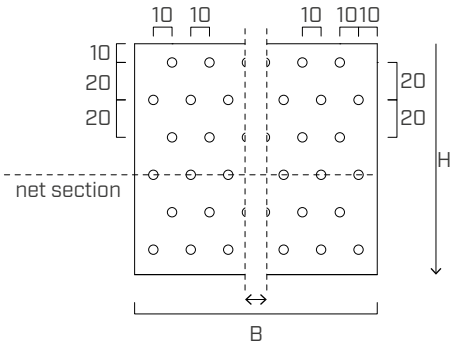

B	net area holes	B	net area holes	B	net area holes
[mm]	pcs	[mm]	[pcs]	[mm]	[pcs]
40	2	140	7	240	12
60	3	160	8	260	13
80	4	180	9	280	14
100	5	200	10	300	15
120	6	220	11	400	20

INSTALLATION

MINIMUM DISTANCES

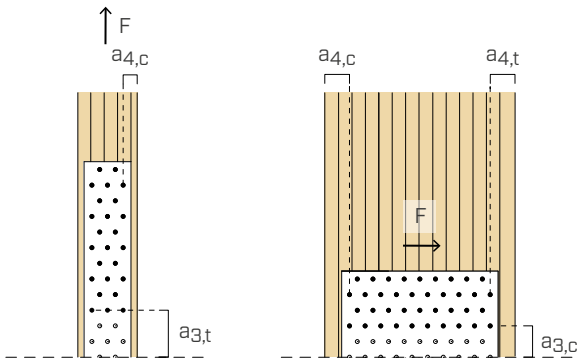

load-to-grain angle α = 0°		nail LBA Ø4	screw LBS Ø5
lateral connector - unloaded edge	$a_{4,c}$ [mm]	≥ 20	≥ 25
connector - loaded end	$a_{3,t}$ [mm]	≥ 60	≥ 75

load-to-grain angle α = 90°		nail LBA Ø4	screw LBS Ø5
lateral connector - loaded edge	$a_{4,t}$ [mm]	≥ 28	≥ 50
lateral connector - unloaded edge	$a_{4,c}$ [mm]	≥ 20	≥ 25
connector - unloaded end	$a_{3,c}$ [mm]	≥ 40	≥ 50

STRUCTURAL VALUES | TIMBER-TO-TIMBER | F_1

STRENGTH OF THE SYSTEM

The tensile strength of the $R_{1,d}$ system is the minimum between the $R_{ax,d}$ plate side tensile strength and the shear resistance of the connectors used for fastening n_{tot} $R_{v,d}$.
If the connectors are placed in several consecutive rows and the load direction is parallel to the grain, the following sizing criteria must be applied.

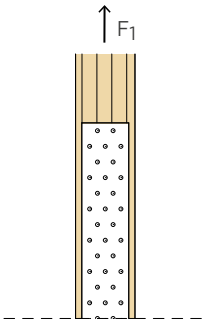

$$R_{1,d} = min \begin{cases} R_{ax,d} \\ \sum m_i \cdot n_i^k \cdot R_{v,d} \end{cases} \qquad k = \begin{cases} 0,85 & LBA \quad Ø = 4 \\ 0,75 & LBS \quad Ø = 5 \end{cases}$$

Where m_i is the number of rows of connectors parallel to the grain and n_i is the number of connectors arranged in the same row.

PLATE - TENSILE STRENGTH

type	B [mm]	s [mm]	net area holes [pcs]	$R_{ax,k}$ [kN]
LBV 1,5 mm	60	1,5	3	**20,0**
	80	1,5	4	**26,7**
	100	1,5	5	**33,4**
LBV 2,0 mm	40	2,0	2	**17,8**
	60	2,0	3	**26,7**
	80	2,0	4	**35,6**
	100	2,0	5	**44,6**
	120	2,0	6	**53,5**
	140	2,0	7	**62,4**
	160	2,0	8	**71,3**
	180	2,0	9	**80,2**
	200	2,0	10	**89,1**
	220	2,0	11	**98,0**
	240	2,0	12	**106,9**
	260	2,0	13	**115,8**
	280	2,0	14	**124,7**
	300	2,0	15	**133,7**
	400	2,0	20	**178,2**

CALCULATION EXAMPLE |TIMBER-TO-TIMBER JOINT

An example of joint type calculation is shown in the figure on page 339, using also a perforated strap LBB in comparison.

GENERAL PRINCIPLES

- The plate design strength values can be obtained as follows:

  $$R_{ax,d} = \frac{R_{ax,k}}{\gamma_{M2}}$$

  The coefficient γ_{M2} should be taken according to the current regulations used for the calculation.
- Dimensioning and verification of the timber elements must be carried out separately.
- It is recommended to place the connectors symmetrically with respect to the load direction.

LBB

PERFORATED STRAP

CE
EN 14545



TWO THICKNESSES
Simple and effective system to achieve floor bracing. It is available in thicknesses of 1,5 and 3,0 mm.

SPECIAL STEEL
Made with S350GD high strength steel. The 1,5 mm thick version offers extreme performance to tensile forces with minimal thickness.

TENSIONING
The CLIPFIX60 accessory allows the strap to be tensioned and anchored firmly at the ends. By using a GEKO or SKORPIO panel pullers together with the CLAMP1 accessory, the perforated strap can be tensioned.

USA, Canada and more design values available online.

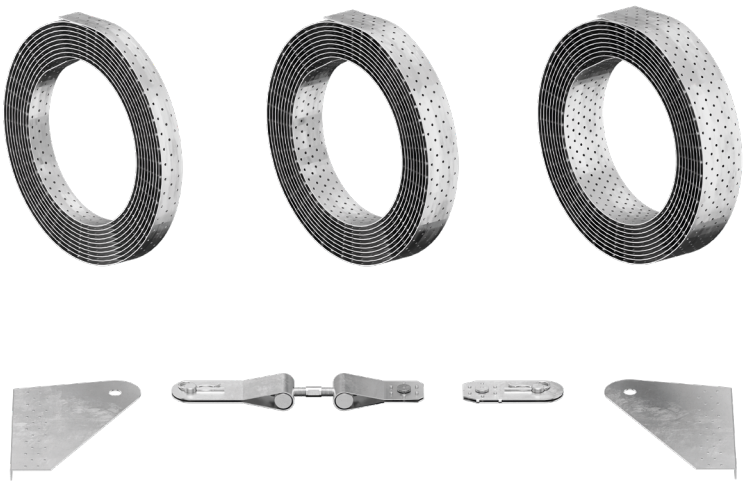

SERVICE CLASS

SC1 SC2

MATERIAL

S350 Z275 **LBB 1, 5 mm**: S350GD + Z275 carbon steel

S250 Z275 **LBB 3,0 mm**: S250GD + Z275 carbon steel

THICKNESS [mm]

1,5 mm | 3,0 mm

EXTERNAL LOADS

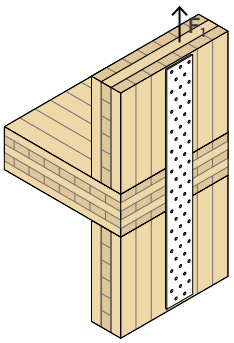



FIELD OF USE

Economical solution for tensile joints with small to medium stress.
Rolls of 25 or 50 m allow for very long connections.
Timber-to-timber configuration.

Can be applied to:
- solid timber and glulam
- timber frame
- CLT and LVL panels

CODES AND DIMENSIONS

LBB 1,5 mm

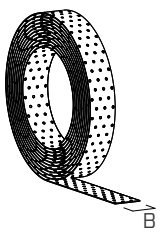

CODE	B [mm]	H [m]	s [mm]	*B [in]*	*H [in]*	*s [in]*	n Ø5 *n Ø.20* [pcs]		pcs
LBB40	40	50	1,5	*1 9/16*	*1 15/16*	*0.06*	75/m *23 / ft.*	●	1
LBB60	60	50	1,5	*2 3/8*	*1 15/16*	*0.06*	125/m *38 / ft.*	●	1
LBB80	80	25	1,5	*3 1/8*	*1 15/16*	*0.06*	175/m *53 / ft.*	●	1

LBB 3,0 mm

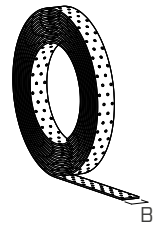

CODE	B [mm]	H [m]	s [mm]	*B [in]*	*H [in]*	*s [in]*	n Ø5 *n Ø.20* [pcs]		pcs
LBB4030	40	50	3	*1 9/16*	*1 15/16*	*0.12*	75/m *23 / ft.*	●	1

CLIPFIX

CODE	LBB type	LBB width	pcs
CLIPFIX60	LBB40 | LBB60	40 mm | 60 mm *1 9/16 in | 2 3/8 in*	1

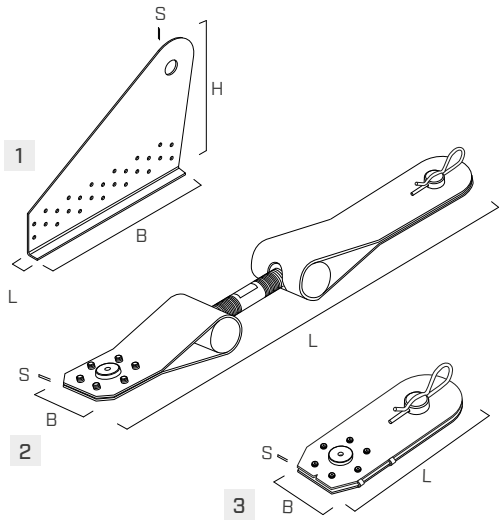

SET COMPRISED OF:		B [mm] *[in]*	H [mm] *[in]*	L [mm] *[in]*	s [mm] *[in]*	n Ø5 *n Ø.20* pcs	pcs
1	Terminal plate	289 *11 3/8*	198 *7 13/16*	15 *9/16*	2 *0.08*	26	4(1)
2	Clip-Fix tensioner	60 *2 3/8*	-	300-350 *11 3/4 - 13 3/4*	2 *0.08*	7	2
3	Clip-Fix Terminal	60 *2 3/8*	-	157 *6 3/16*	2 *0.08*	7	2

(1)The set includes two right-hand and two left-hand plates.

The Clip-Fix tensioners and terminals are compatible for installation of the LBB40 and LBB60 perforated straps.

GEOMETRY

LBB40 / LBB4030

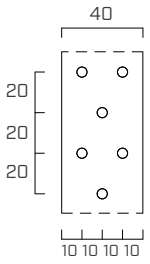

LBB60

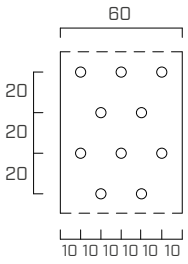

LBB80

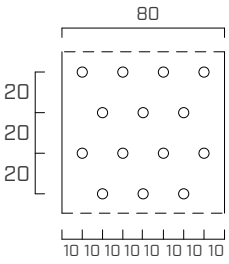

FASTENERS

type	description		d [mm]	support	page
LBA	high bond nail		4		570
LBS	round head screw		5		571
LBS EVO	C4 EVO round head screw		5		571

INSTALLATION

MINIMUM DISTANCES

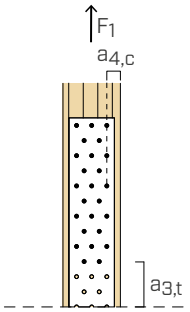

TIMBER minimum distances			nails LBA Ø4	screws LBS Ø5
Lateral connector - unloaded edge	$a_{4,c}$	[mm]	≥ 20	≥ 25
Connector - loaded end	$a_{3,t}$	[mm]	≥ 60	≥ 75

STRUCTURAL VALUES | TIMBER-TO-TIMBER | F_1

STRENGTH OF THE SYSTEM

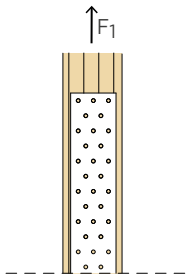

The tensile strength of the R1,d system is the minimum between the Rax,d plate side tensile strength and the shear resistance of the connectors used for fastening n_{tot} $R_{v,d}$.
If the connectors are placed in several consecutive rows and the load direction is parallel to the grain, the following sizing criteria must be applied.

$$R_{1,d} = min \begin{cases} R_{ax,d} \\ \sum m_i \cdot n_i^k \cdot R_{v,d} \end{cases} \qquad k = \begin{cases} 0,85 & LBA \quad Ø = 4 \\ 0,75 & LBS \quad Ø = 5 \end{cases}$$

Where m_i is the number of rows of connectors parallel to the grain and n_i is the number of connectors arranged in the same row.

TAPE - TENSILE STRENGTH

type	B	s	net area holes	$R_{ax,k}$
	[mm]	[mm]	[pcs]	[kN]
LBB 1,5 mm	40	1,5	2	**17,0**
	60	1,5	3	**25,5**
	80	1,5	4	**34,0**
LBB 3,0 mm	40	3,0	2	**26,7**

CONNECTORS SHEAR RESISTANCE

For the strength $R_{v,k}$ of the LBA Anker nails and of the LBS screws, refer to the "TIMBER SCREWS AND DECK FASTENING" catalogue.

GENERAL PRINCIPLES

- Characteristic values according to EN 1995:2014 and EN 1993:2014.
- The plate design strength values can be obtained as follows:

$$R_{ax,d} = \frac{R_{ax,k}}{\gamma_{M2}}$$

- The connectors design strength values can be obtained as follows:

$$R_{v,d} = \frac{R_{v,k} \cdot k_{mod}}{\gamma_M}$$

The coefficients k_{mod}, γ_M and γ_{M2} should be taken according to the current regulations used for the calculation.

- A timber density of ρ_k = 350 kg/m^3 was considered for the calculation process.
- Dimensioning and verification of the timber elements must be carried out separately.
- It is recommended to place the connectors symmetrically with respect to the load direction.

CALCULATION EXAMPLE | DETERMINING RESISTANCE R_{1d}

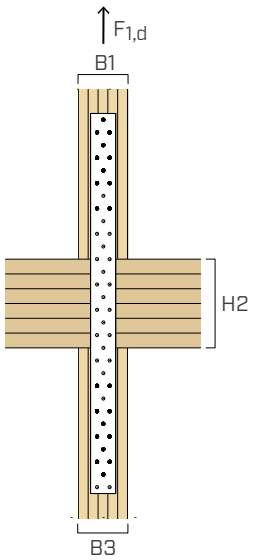

Project data		
Strength	$F_{1,d}$	12,0 kN
Service class		2
Load duration		short
Solid timber C24		
Element 1	**B1**	80 mm
Element 2	**H2**	140 mm
Element 3	**B3**	80 mm

perforated strap LBB40
B = 40 mm
s = 1,5 mm

Anker nail LBA440(1)
d_1 = 4,0 mm
L = 40 mm

perforated plate LBV401200(2)
B = 40 mm
s = 2 mm
H = 600 mm

Anker nail LBA440(1)
d_1 = 4,0 mm
L = 40 mm

EVALUATION OF THE STRENGTH OF THE SYSTEM

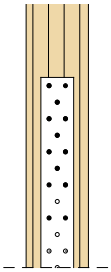

perforated strap LBB40

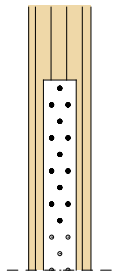

perforated plate LBV401200

TAPE/PLATE - TENSILE STRENGTH

perforated strap LBB40			
$R_{ax,k}$	=	17,0	kN
γ_{M2}	=	1,25	
$R_{ax,d}$	**=**	**13,60**	**kN**

perforated plate LBV401200(2)			
$R_{ax,k}$	=	17,8	kN
γ_{M2}	=	1,25	
$R_{ax,d}$	**=**	**14,24**	**kN**

CONNECTOR - SHEAR STRENGTH

perforated strap LBB40			
$R_{v,k}$	=	2,19	kN
n_{tot}	=	13	pcs
n_1	=	5	pcs
m_1	=	2	lines
n_2	=	3	pcs
m_2	=	1	lines
k_{LBA}	=	0,85	
k_{mod}	=	0,90	
γ_M	=	1,30	
$R_{v,d}$	=	1,52	kN
$\sum m_i \cdot n_i^k \cdot R_{v,d}$	**=**	**15,77**	**kN**

perforated plate LBV401200(2)			
$R_{v,k}$	=	2,17	kN
n_{tot}	=	13	pcs
n_1	=	4	pcs
m_1	=	2	lines
n_2	=	5	pcs
m_2	=	1	lines
k_{LBA}	=	0,85	
k_{mod}	=	0,90	
γ_M	=	1,30	
$R_{v,d}$	=	1,50	kN
$\sum m_i \cdot n_i^k \cdot R_{v,d}$	**=**	**15,66**	**kN**

STRENGTH OF THE SYSTEM

$$R_{1,d} = min \begin{cases} R_{ax,d} \\ \sum m_i \cdot n_i^k \cdot R_{v,d} \end{cases}$$

perforated strap LBB40			
$R_{1,d}$	=	13,60	kN

perforated plate LBV401200(2)			
$R_{1,d}$	=	14,24	kN

VERIFICATION	$R_{1,d} \geq F_{1,d}$	13,6 kN	≥	12,0	kN	✓
		verification passed				

VERIFICATION	$R_{1,d} \geq F_{1,d}$	14,2	≥	12,0	kN	✓
		verification passed				

NOTES

(1) In the calculation example LBA Anker nails are used. The fastening can also be made with LBS screws (page 571).

(2) Plate LBV401200 is considered cut to length 600 mm.

GENERAL PRINCIPLES

- To optimize the connection system, it is recommended to use a number of connectors which can provide a shear capacity that does not exceed the tensile strength of the tape/plate.
- It is recommended to place the connectors symmetrically with respect to the load direction.

SYSTEMS FOR WALLS, FLOORS AND BUILDINGS

SYSTEMS FOR WALLS, FLOORS AND BUILDINGS

GROUND CONNECTION SYSTEMS

ALU START
ALUMINIUM SYSTEM FOR THE CONNECTION OF BUILDINGS TO THE GROUND 346

TITAN DIVE
ADVANCED HIGH-TOLERANCE ANGLE BRACKET 362

UP LIFT
SYSTEM FOR BUILDINGS RAISED INSTALLATION 368

PREFABRICATED SYSTEMS

RADIAL
REMOVABLE CONNECTOR FOR BEAMS AND PANELS 376

RING
REMOVABLE CONNECTOR FOR STRUCTURAL PANELS 388

X-RAD
X-RAD CONNECTION SYSTEM 390

SLOT
CONNECTOR FOR STRUCTURAL PANELS 396

HOOKED PLATES

SHARP METAL
STEEL HOOKED PLATES 404

POST AND SLAB SYSTEMS

SPIDER
CONNECTION AND REINFORCEMENT SYSTEM FOR COLUMNS AND FLOORS 420

PILLAR
POST-AND-SLAB CONNECTION SYSTEM 428

SHARP CLAMP
MOMENT CONNECTION FOR PANELS 436

TIMBER-TO-CONCRETE HYBRID JOINTS

TC FUSION
TIMBER-TO-CONCRETE JOINT SYSTEM 440

DESIGN for MANUFACTURE AND ASSEMBLY

Design for Manufacture and Assembly (DfMA) is an approach to design and construction that aims to make the construction industry better, leaner and safer. Rothoblaas, in this context, develops **pre-engineered, standardised, scalable connections** based on a few similar connector types. In addition, it offers **modular and prefabricable connection systems,** making the **construction process more efficient**. DfMA can be deployed in different ways and with different strategies, such as **prefabrication** and the development of innovative **tolerance management**systems.

PREFABRICATION

Timber constructions, thanks to the possibility of completely dry assembly and the precision of CNC cutting, are very suitable for prefabrication and modularity. Prefabrication means carrying out a part of the assembly of building components at a location other than their final location (production plant or site space) and then transporting them to their destination and assembling them in a few simple steps. **Working in the factory means being faster and more efficient, making** costs, quality of work and quality of life for the workers more efficient.

CONSTRUCTION SITE

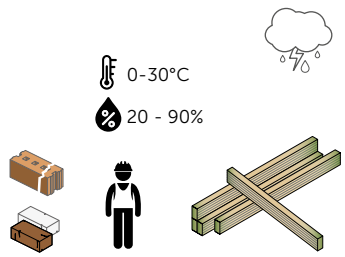

Unpredictable weather
Messy environment
Sharing spaces with other companies
Limited availability of equipment
Costs of food, accommodation and travel for workers
Difficulties in communicating with their technicians

FACTORY

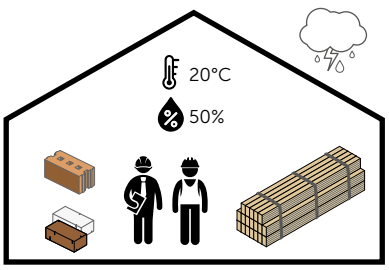

Controlled climate
Tidiness, cleanliness
Exclusive use of spaces
Machinery and tools at your fingertips
Optimisation of personnel costs
Proximity to your technical office

Prefabrication can be applied in different ways and with progressively more advanced levels: let's see some of them.

PRE-ASSEMBLY OF COMPOUND STRUCTURAL ELEMENTS

Structural elements consisting of several timber components can be pre-assembled in the factory, such as ribbed timber floors (rib panels or box panels). Dry assembly with SHARP METAL allows the disassembled floors to be transported in containers and then the ribbed section to be rebuilt on site.

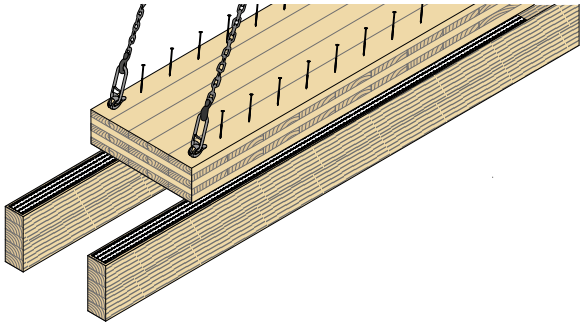

PRE-INSTALLATION OF CONNECTIONS ON STRUCTURAL ELEMENTS

Some connection systems allow pre-installation of the connector at the factory. The small footprint of the connectors allows space optimisation during transport and prevents damage during handling. Connecting the elements on site is therefore quick and efficient.

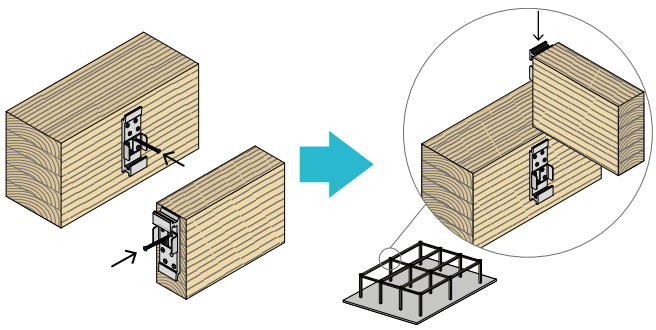

PREFABRICATED CONSTRUCTIONS WITH FLAT (OR TWO-DIMENSIONAL) MODULES

A first mode of advanced prefabrication of buildings consists in the factory production of flat components such as walls, floors or roofs. These can be transported to the construction site with varying degrees of prefabrication:

- **Structural 2D modules,** comprising only the load-bearing structure, with the possible addition of insulating materials or waterproofing.
- **Complete 2D modules,** in which the finishes and any plant components are partially or fully present.

Rothoblaas offers many connection systems optimised for this type of application.

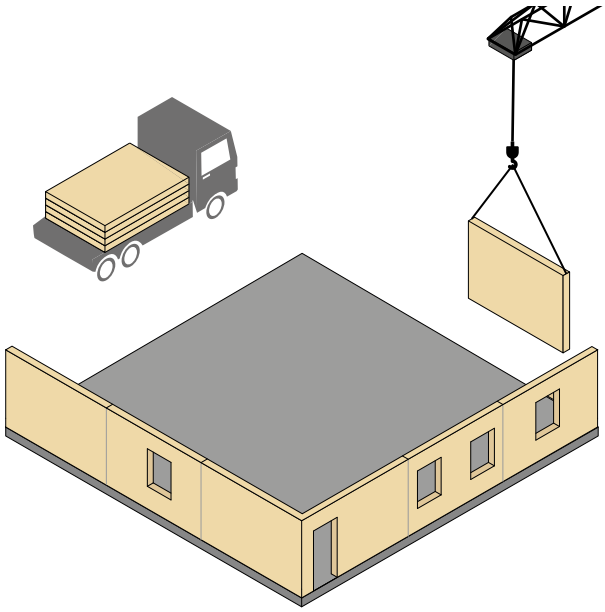

PREFABRICATED CONSTRUCTIONS WITH VOLUMETRIC (OR THREE-DIMENSIONAL) MODULES

The most advanced mode of prefabrication consists in the factory production of volumetric components that, once placed side by side and stacked on site, give life to the rooms and other volumes of the building.
These can be produced with a very high degree of pre-fabrication, including interior and exterior finishes, fixtures and fittings. A major challenge for these buildings is the organisation of logistics and transport. For this reason, the module connection system can also be used as a lifting and handling system. Discover Rothoblaas solutions for this type of application!

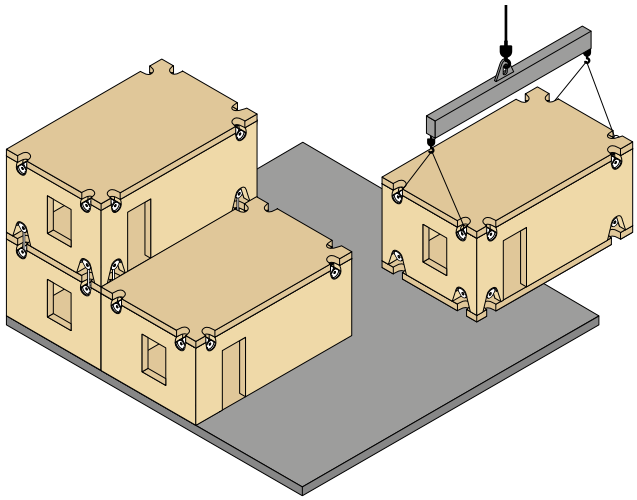

INNOVATIVE TOLERANCE MANAGEMENT SYSTEMS

DfMA means not only prefabrication but also, for example, finding **ingenious solutions for managing tolerances between timber structures and concrete foundations.** Innovative systems allow for more efficient site organisation, ensuring better management of tolerances between the timber structure and concrete base. This is the case of **TITAN DIVE, UP LIFT** and **ALU START:** a complete range of intelligent solutions for ground connection management.

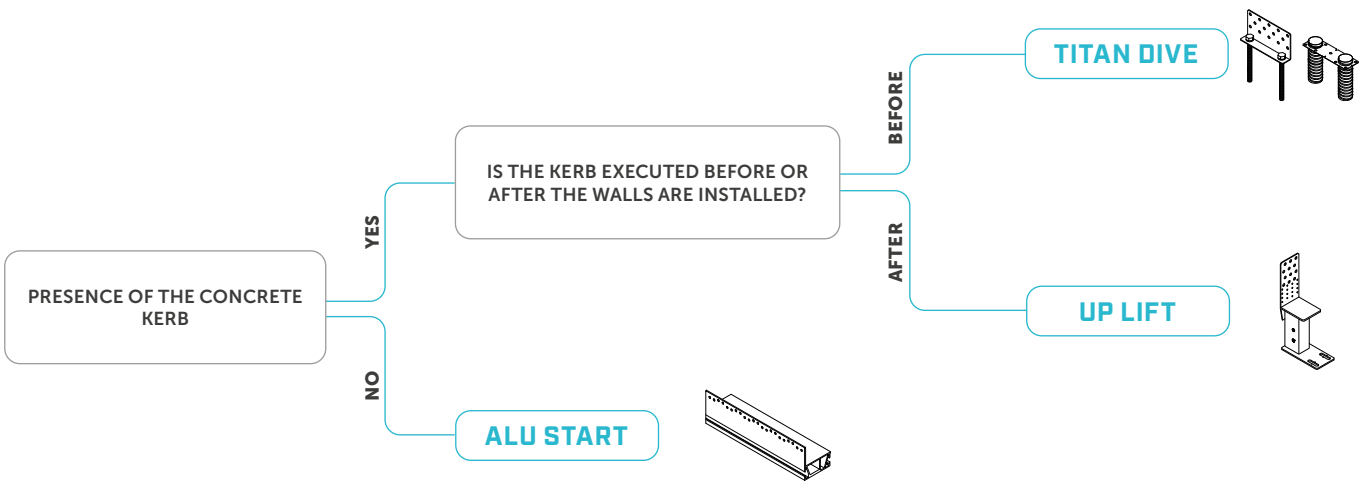

DESIGN for ADAPTABILITY AND DISASSEMBLY

Nothing lasts forever: in the life of a building there are circumstances that require partial or total adaptation or disassembly. Here are some examples:

- Extraordinary **MAINTENANCE.**
- **ENLARGEMENT** or change of use of the building.
- **REPAIR** after exceptional events (fires, hurricanes, earthquakes).
- **DISASSEMBLY** and **DISPOSAL** at end of life.

Design for Adaptability and Disassembly (DfAD) is an effective method to **minimise future costs for the owner** and to reduce the production of construction and demolition waste and the generation of greenhouse gases.

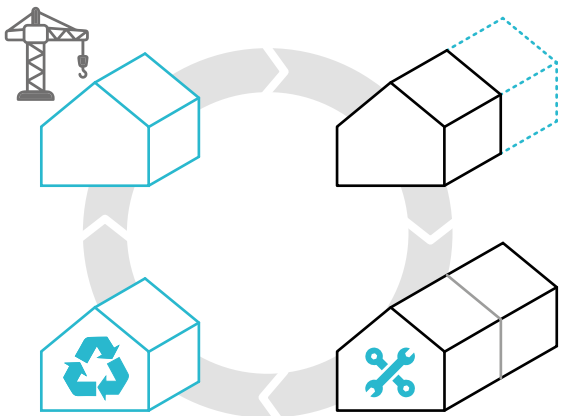

CHOOSING THE CONNECTION

In a timber building, connections play a key role in adaptability and disassembly: it is therefore **important to choose consciously.** Each connection is made up of the connector (e.g. plate, angle, etc.) and the corresponding fasteners that connect it to the timber elements (e.g. nails, screws, etc.).

FASTENERS

Metal fasteners with a cylindrical shank are very different when viewed from a DfAD perspective. The wide range of Rothoblaas connections allows users to choose, within the same product group, solutions with different fastening according to structural requirements, but also the health and safety of workers, as well as the possibility of pre-assembly, adaptability and disassembly.

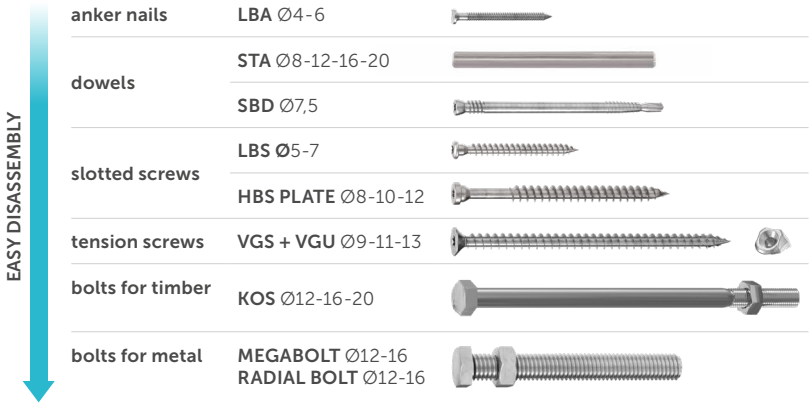

CONNECTORS

There are different types of connectors which allow the following steps to be handled differently:

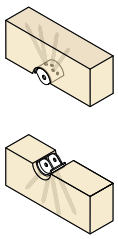

PRE-INSTALLATION

The pre-assembly phase, if any, of the connector on the elements to be fastened.

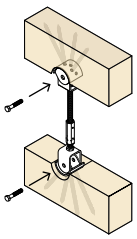

CONNECTION ON SITE

The step in which two timber structural elements (e.g. a wall and a floor) are connected together.

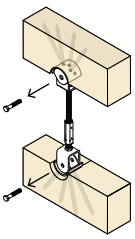

DISASSEMBLY

The step in which the two timber structural elements are separated from each other.

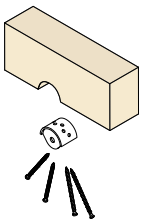

CONNECTORS REMOVAL

The step in which the metal connectors and their fasteners are removed from the structural timber elements.

The choice of connection must also be made according to the performance required in these four steps.

CLASSIFICATION OF CONNECTIONS

DfMA
DfAD

What is easily assembled can often also be easily disassembled. A holistic approach to design must necessarily consider DfMA and DfAD: two sides of the same coin.
In order to guide one's choice, it is possible, for example, to classify connections into four types:

0 — 1 — 2 — 3

TYPE 0

"hardening" connections, meaning that **at least one of the components of the connection is in a fluid state during assembly,** and then solidifies to make the connection.

TYPE 1

these are **direct connections,** where a single connector acts as the connection, **without accessory components.**

TYPE 2

connections **with a single connector,** where a single plate is fastened to both timber structural elements by means of **cylindrical shank fasteners.**

TYPE 3

connections with **double connector,** where two separate connectors are connected to the structural timber elements via cylindrical shank fasteners. The two connectors are **joined together** at the construction site to complete the connection.

	PRODUCTION AND ASSEMBLY (DfMA)		ADAPTABILITY AND DISASSEMBLY (DfAD)	
type	pre-installation	connection on site	disassembly	removal of connectors
0 FOR HARDENING	possible pre-installation of fasteners on the timber component	casting and hardening of fluid material	cutting the affected volume of timber	by demolition
1 DIRECT FASTENING	CNC preparation of special cuts	insertion of connectors directly connecting the two timber components	withdrawal of connectors from the two timber components	-
2 SINGLE CONNECTOR	-	fastening the plate to the two timber components	withdrawal of fasteners from the first timber component	withdrawal of fasteners from the second timber component
3 DOUBLE CONNECTOR + INTERCONNECTION	pre-installation of the two plates on the timber components	connection between the two plates	disconnection of the two plates	withdrawal of fasteners from the two timber components

This catalogue allows the user to choose the most suitable connection system within the four categories. Here are some examples.

0 XEPOX, TC FUSION

1 SLOT, WOODY, SHARP CLAMP

2 ALUMINI, ALUMIDI, ALUMAXI, DISC FLAT, NINO, TITAN, TITAN PLATE T, WHT PLATE T, VGU PLATE

3 LOCK T, UV-T, ALUMEGA, WKR DOUBLE, WKR, WHT, RADIAL, X-RAD, SPIDER, PILLAR

The use of **more engineered** (and often more expensive) connection systems can save a great deal of time and money due to the **efficient assembly** (and disassembly). In any case **there is no such thing as a better connector than the others,** it all depends on the requirements of the project, the site logistics, the skills of the workers and many other factors.

ALU START

ALUMINIUM SYSTEM FOR THE CONNECTION OF BUILDINGS TO THE GROUND

CE MARK ACCORDING TO ETA

The profile is capable of transferring shear, tensile and compressive forces into the foundation. The strengths are tested, calculated and certified according to ETA-20/0835.

ELEVATION FROM THE FOUNDATION

The profile allows to eliminates contact between the timber panels (CLT or TIMBER FRAME) and the concrete substructure. Excellent durability of the building connection to the ground.

SUPPORT SURFACE LEVELLING

Thanks to the special assembly templates, the supporting surface level is easy to adjust. The "levelling" of the entire building is simple, precise and fast.

USA, Canada and more design values available online.

VIDEO

CALCULATION TOOL

DESIGN REGISTERED

ETA-20/0835

SERVICE CLASS SC1 SC2

MATERIAL

alu 6060 EN AW-6060 aluminium alloy

EXTERNAL LOADS

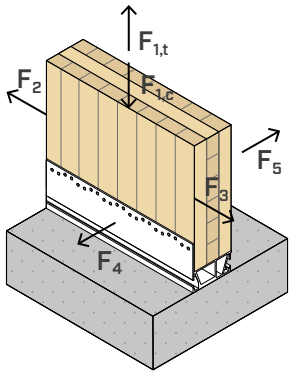

VIDEO

Scan the QR Code and watch the video on our YouTube channel





FIELDS OF USE

Ground attachment system for timber walls. The aluminium profiles are positioned and levelled before the walls are installed.
Fastening with LBA nails, LBS screws and concrete anchors.

Can be applied to:

- TIMBER FRAME walls
- CLT and LVL panel walls





DURABILITY

Thanks to the elevation from the foundation and the aluminium material, the building base is protected against capillary damp. The ground connection provides durability and health to the structure.

CERTIFIED STRENGTH

Thanks to the side flange, the profile can be fastened to the timber wall by means of nails or screws which guarantee excellent strength in all directions certified by CE marking according to ETA.

CODES AND DIMENSIONS

ALU START

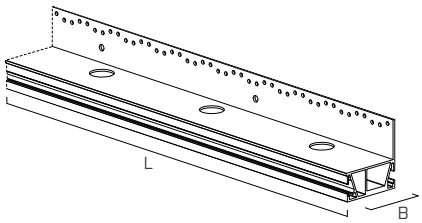

ALUSTART80

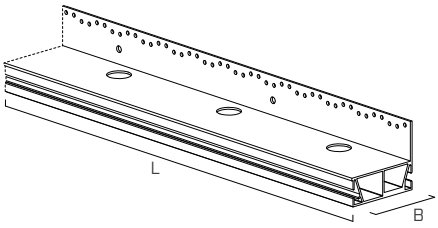

ALUSTART100

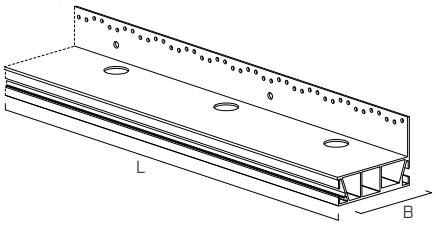

ALUSTART120

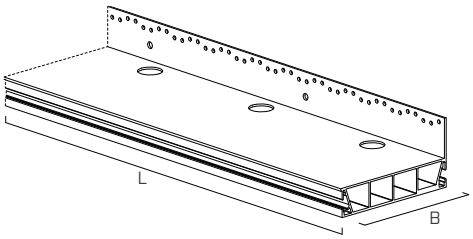

ALUSTART175

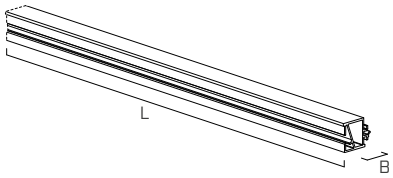

ALUSTART35

CODE	B [mm]	L [mm]	*B* *[in]*	*L* *[in]*		pcs
ALUSTART80	80	2400	*3 1/8*	*94 1/2*	●	1
ALUSTART100	100	2400	*4*	*94 1/2*	●	1
ALUSTART120	120	2400	*4 3/4*	*94 1/2*	●	1
ALUSTART175	175	2400	*6 7/8*	*94 1/2*	●	1
ALUSTART35 *	35	2400	*1 3/8*	*94 1/2*	●	1

* Lateral extension for ALUSTART profiles.

ASSEMBLY ACCESSORIES - JIG START TEMPLATES

CODE	description	B [mm] *[in]*	P [mm] *[in]*	pcs
JIGSTARTI	levelling template for linear joint	160 *6 1/4*	-	25
JIGSTARTL	levelling template for angle joint	160 *6 1/4*	160 *6 1/4*	10

The templates are supplied complete with M12 bolt for height adjustment, ALUSBOLT bolts and MUT93410 nuts.

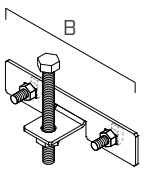

JIGSTARTI

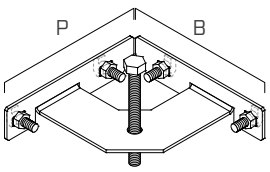

JIGSTARTL

COMPLEMENTARY PRODUCTS

CODE	description	pcs
ALUSBOLT	hammer head bolt for template fastening	100
MUT93410	hammer bolt nut	500
ALUSPIN	ISO 8752 sping pins for ALUSTART35 assembly	50

ALUSBOLT and ALUSPIN can be ordered separately from the templates as spare parts.

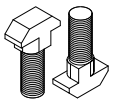

ALUSBOLT



MUT93410

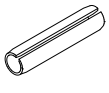

ALUSPIN

FASTENERS

type	description		d [mm]	support	page
LBA	high bond nail		4		570
LBS	round head screw	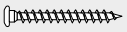	5		571
SKR	screw-in anchor	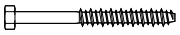	12		528
AB1	CE1 expansion anchor		M12		536
VIN-FIX	vinyl ester chemical anchor		M12		545
HYB-FIX	hybrid chemical anchor	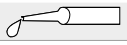	M12		552

GEOMETRY

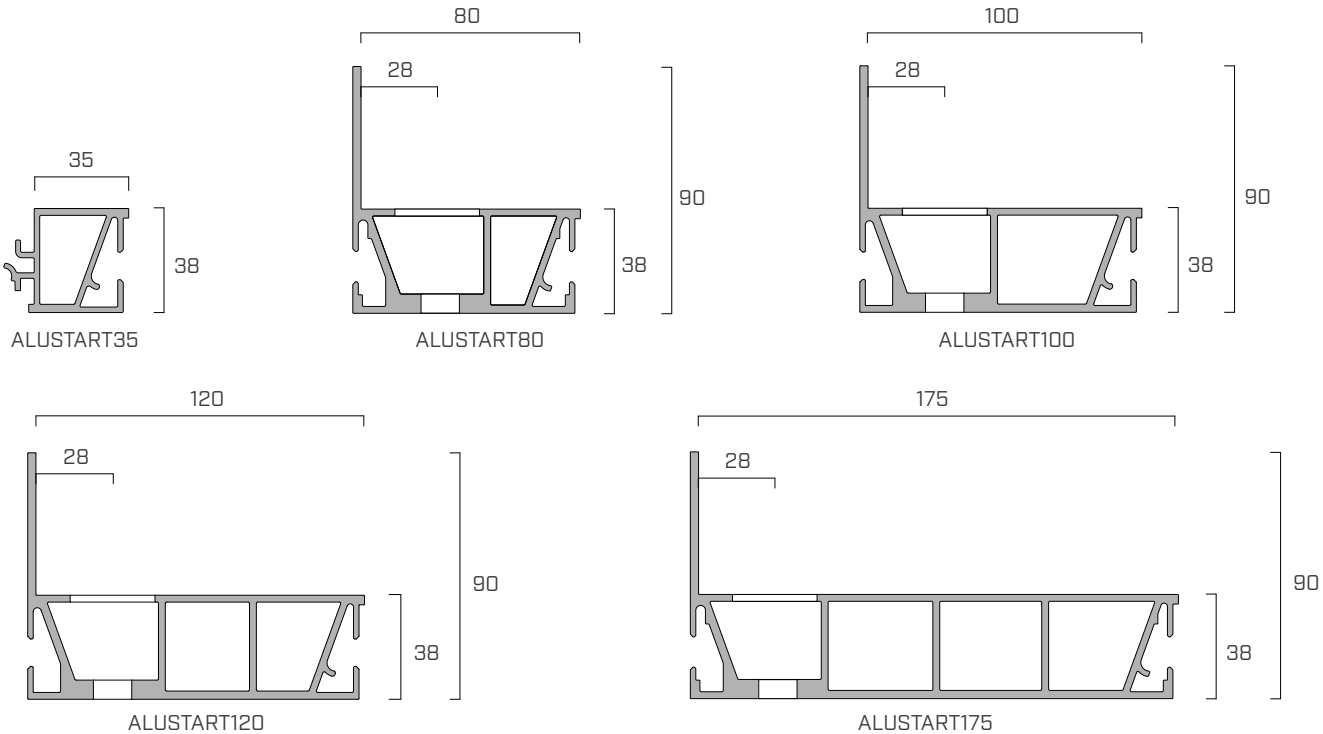

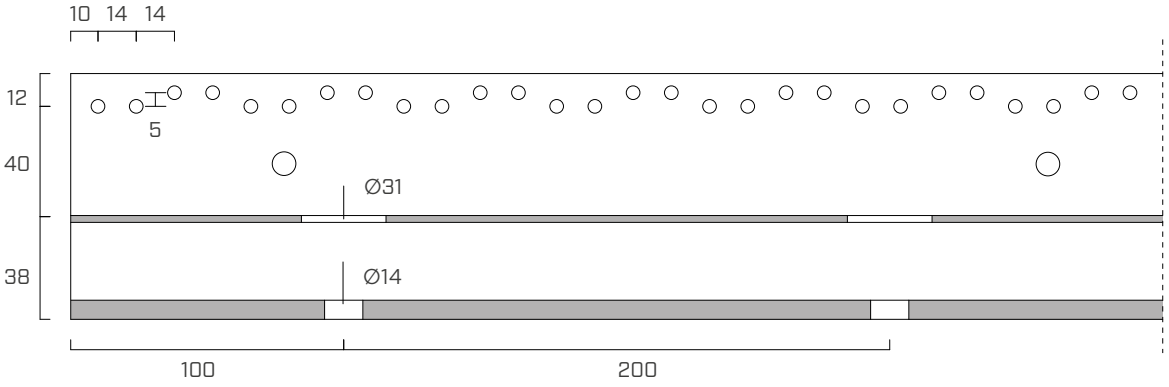

CODE	B [mm]	H [mm]	L [mm]	n_v Ø5 [pcs]	n_H Ø14 [pcs]
ALUSTART80	80	90	2400	171	12
ALUSTART100	100	90	2400	171	12
ALUSTART120	120	90	2400	171	12
ALUSTART175	175	90	2400	171	12
ALUSTART35	35	38	2400	-	-

INSTALLATION

ALU START is an extruded aluminium profile designed to house the walls and to solve the foundation-wall node in timber. The profile is certified to withstand all the stresses typical for a timber wall, i.e. F_1, $F_{2/3}$, F_4 and F_5. ALU START profiles are designed to fit both CLT and Timber Frame walls. The use of the lateral extension ALUSTART35 allows its use with CLT and Timber Frame walls having greater thickness.

INSTALLATION ON CLT

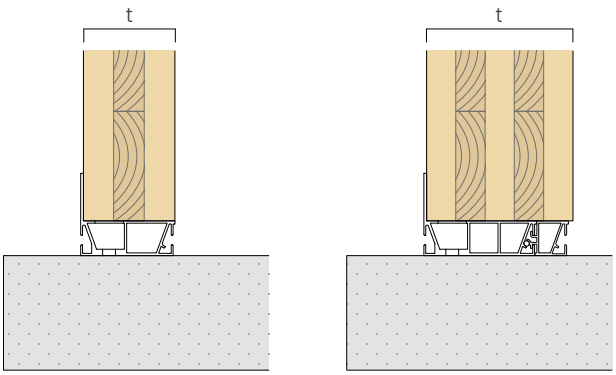

INSTALLATION ON TIMBER FRAME

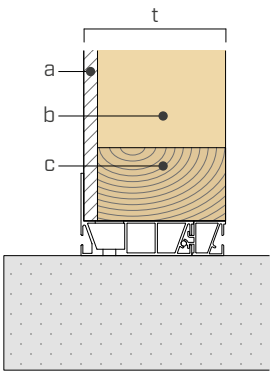

a. bracing sheet
b. strut
c. beam

The ALUSTART35 side extension is easily inserted into the ALU START profiles. The compound profile is then stopped in position by two ALUSPIN pins to be inserted at the ends. It is possible to install up to two ALUSTART35 profiles on a profile with a nailed flange.

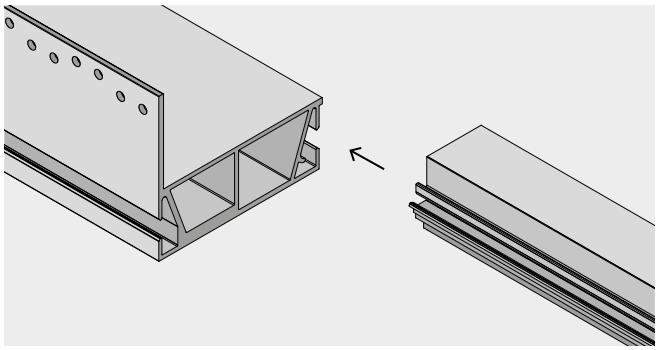

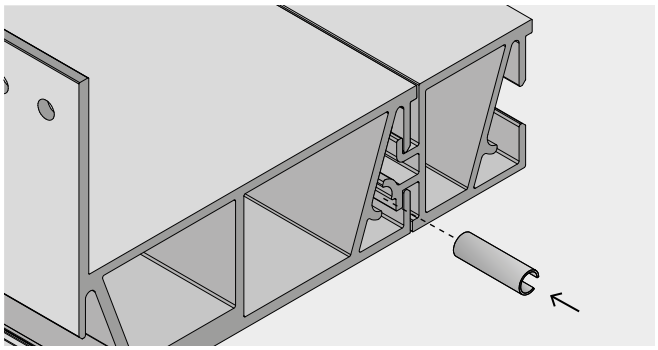

PROFILE SELECTION

profile	reference width	recommended thickness t	
		minimum	maximum
	[mm]	[mm]	[mm]
ALUSTART80	80	-	95
ALUSTART100	100	90	115
ALUSTART120	120	115	135
ALUSTART100 + ALUSTART35	135	135	155
ALUSTART120 + ALUSTART35	155	155	175
ALUSTART175	175	155	195
ALUSTART120 + 2x ALUSTART35	190	180	215
ALUSTART175 + ALUSTART35	210	195	235
ALUSTART175 + 2x ALUSTART35	245	235	270

INSTALLATION

NAILING

ALU START profiles can be used for different building systems (CLT / Timber Frame).
Depending on the construction technology, different nailings can be used in accordance with the minimum distances.

MINIMUM DISTANCES

TIMBER minimum distances			nails LBA Ø4	screws LBS Ø5
C/GL	$a_{4,t}$	[mm]	≥ 28	-
	H_B	[mm]	≥ 73	-
	$a_{3,t}$	[mm]	≥ 60	-
CLT	$a_{4,t}$	[mm]	≥ 28	≥ 30

- C/GL: minimum distances for solid timber or glulam consistent with EN 1995-1-1 according to ETA considering a timber density $\rho_k \leq 420$ kg/m^3.
- CLT: minimum distances for Cross Laminated Timber according to ÖNORM EN 1995-1-1 (Annex K) for nails and ETA-11/0030 for screws.

SOLID TIMBER (C) OR GLULAM (GL)

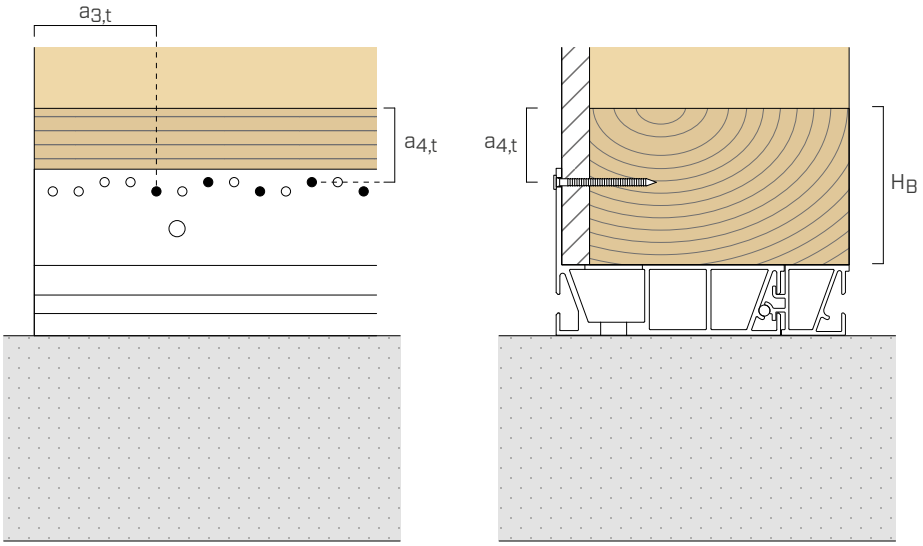

CLT

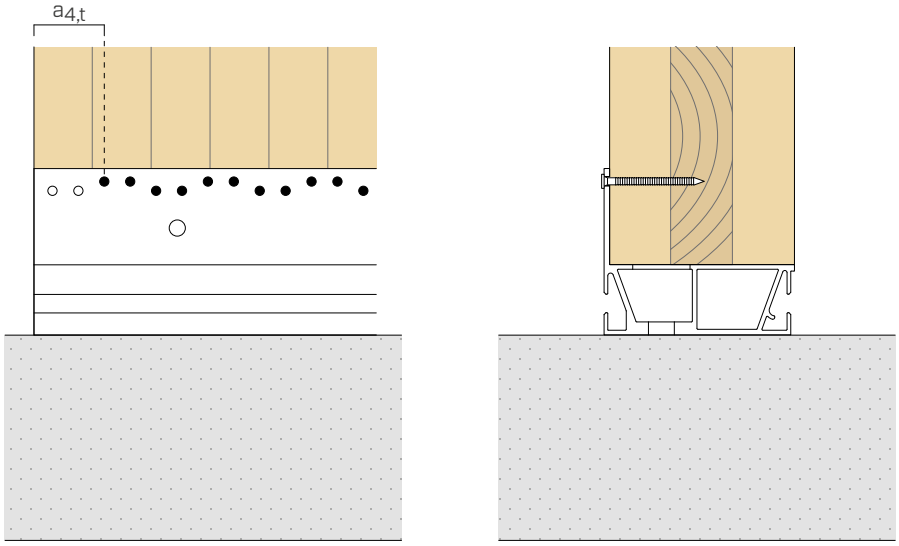

INSTALLATION | CONCRETE

The ALU START profiles must be fastened on concrete with a number of anchors suitable for the design loads.
It is possible to arrange the anchors in all the holes, or choose larger installation spacing.

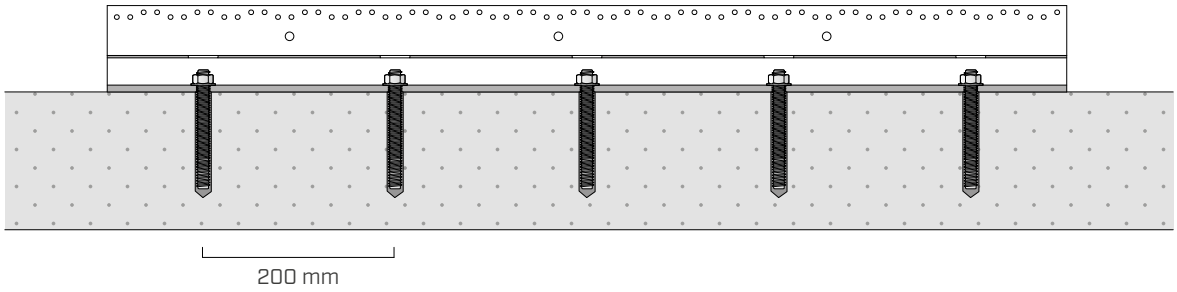

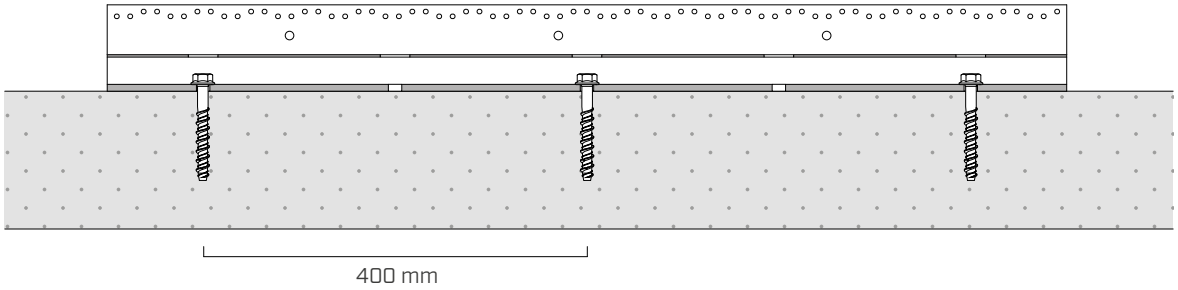

More details on how to install the profiles can be found in the "POSITIONING" section.

ADDITIONAL CONNECTION SYSTEMS

The ALU START geometry allows using additional connection systems such as TITAN TCN and WHT, even with a grout between the profile and the foundation.

Certified partial nailings are available for TITAN TCN installation which allow laying bedding grout with a thickness up to 30 mm.

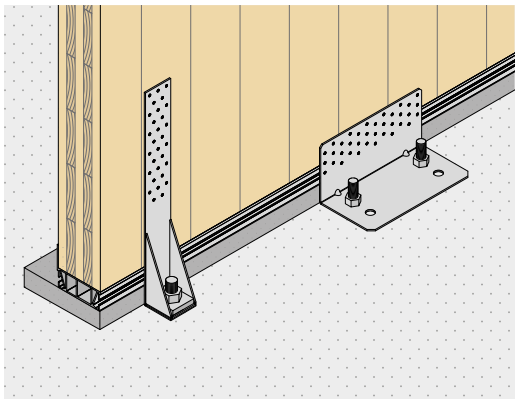

EXAMPLE OF INSTALLATION WITH TITAN TCN240

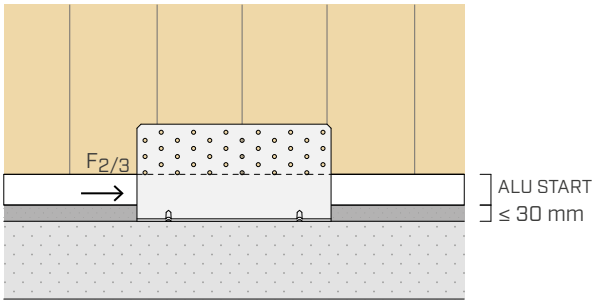

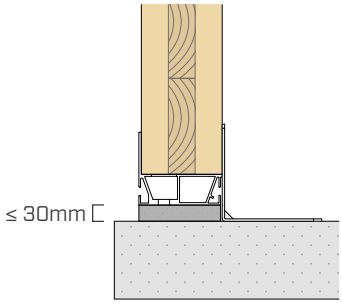

POSITIONING

Assembly includes the use of special JIG START templates for the height levelling of the profiles, for the linear joint and for creating 90° angles.

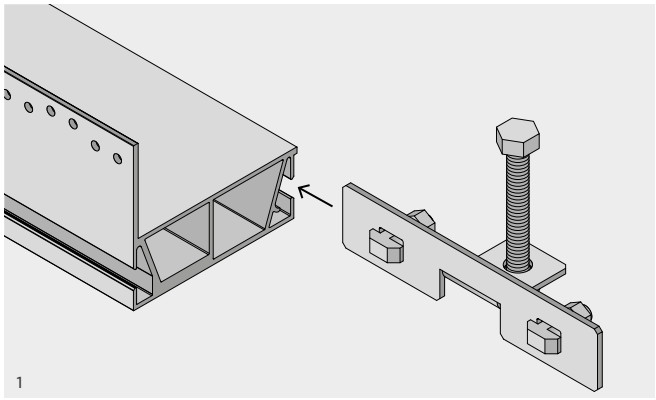

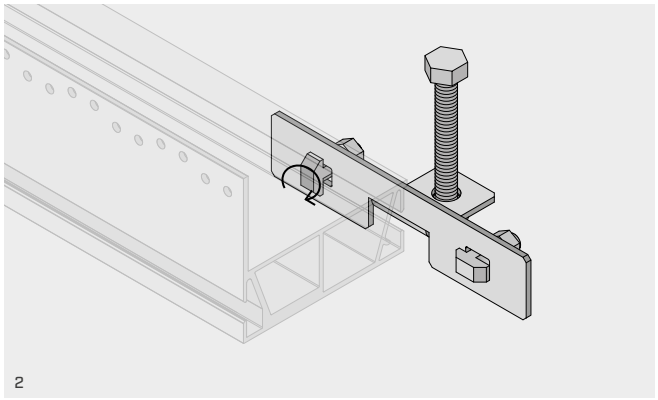

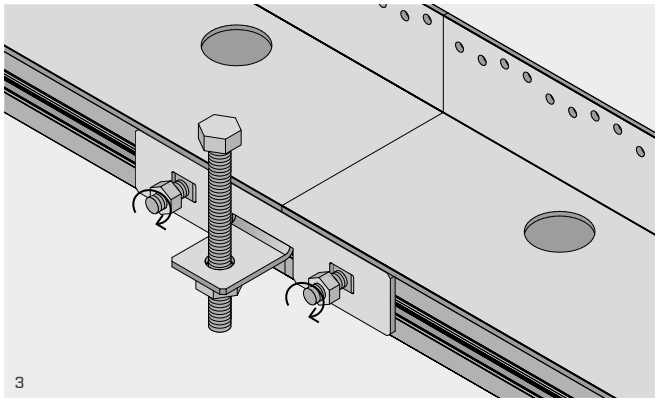

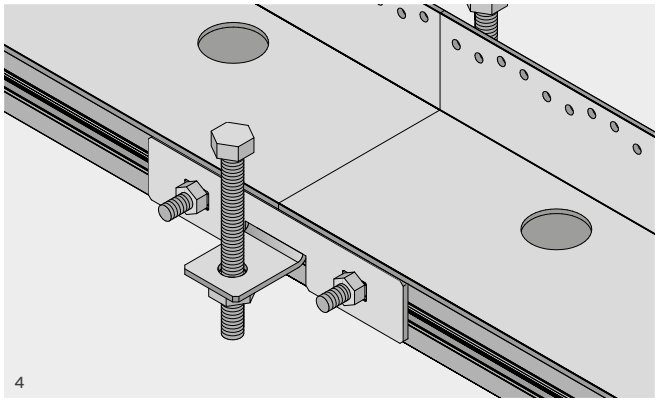

JIGSTARTI templates can connect two consecutive profiles and must be positioned on both sides of ALU START, without positioning constraints along the development.
The 90° angle bracket connection is carried out through the JIGSTARTL jigs.
On each template there is a hexagonal head bolt, which allows the height adjustment of the aluminium profiles.

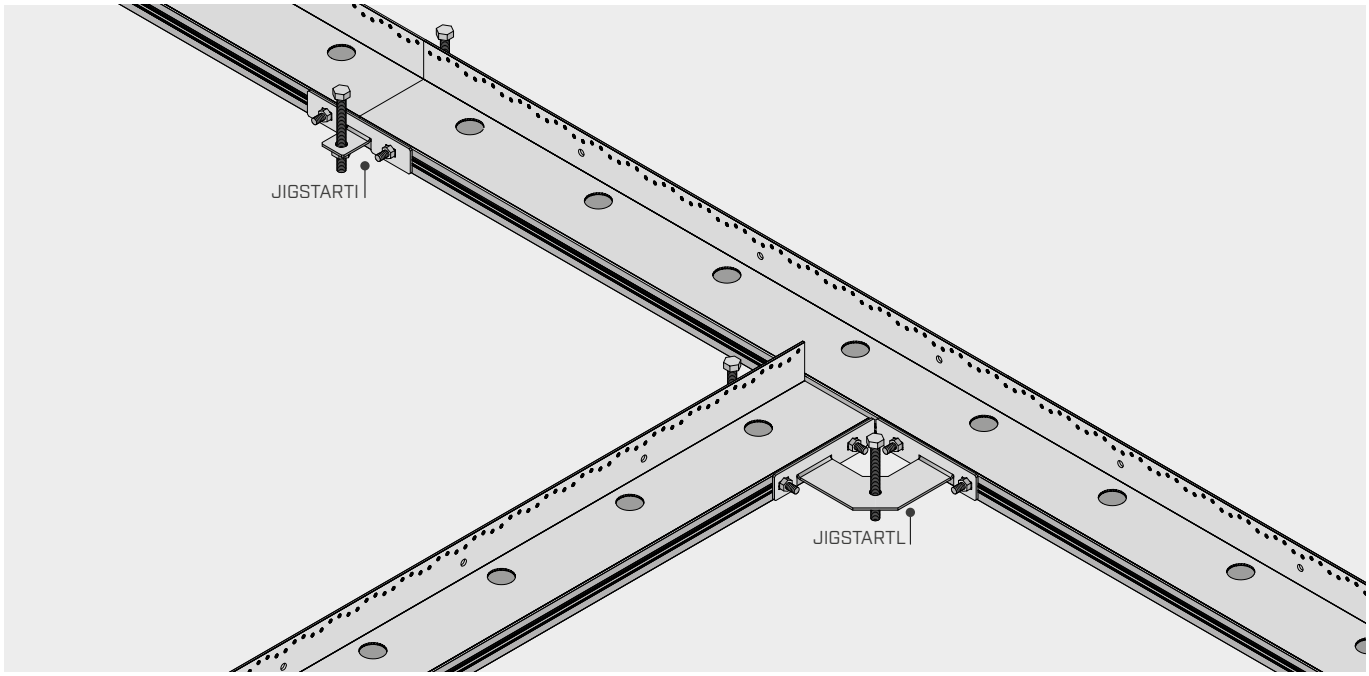

VIDEO

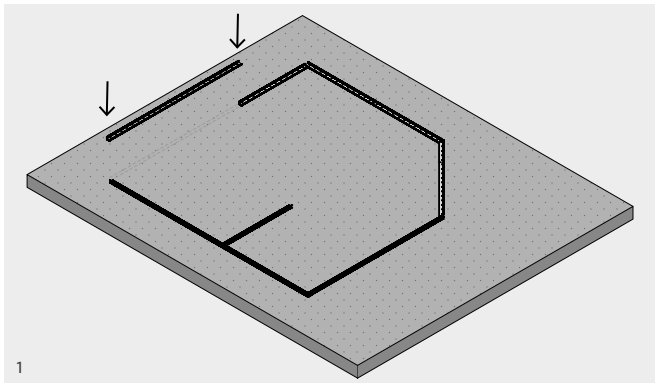

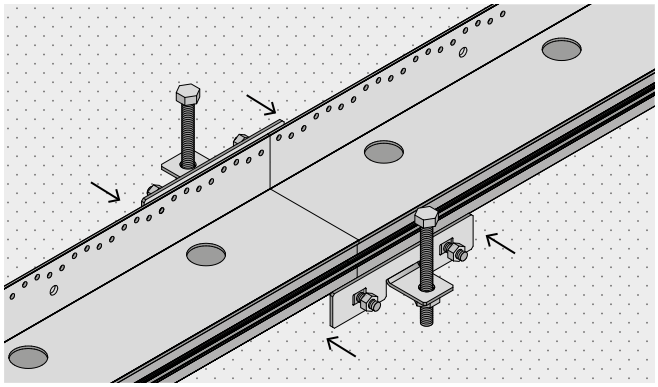

Preliminary positioning of the profiles on the laying surface using the templates and cutting the elements to size, if necessary.

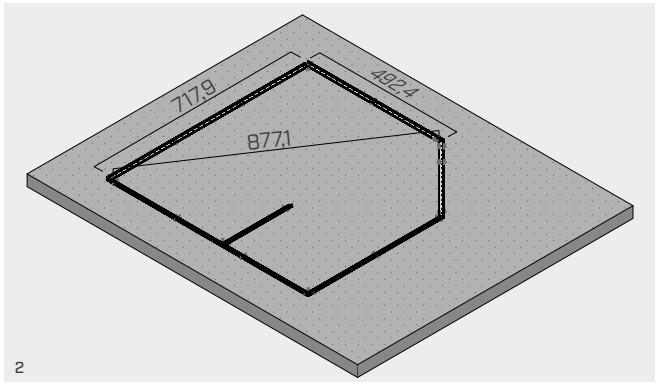

Definitive planimetric drawing with verification of lengths and diagonals.

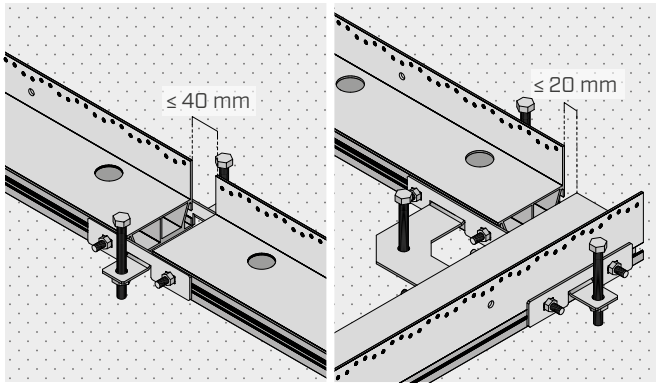

Fine adjustment with JIG START templates
of the total length of the wall, compensating the tolerances of the profiles cut to size.

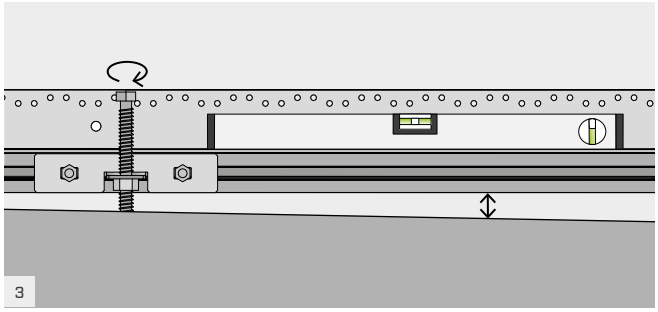

Longitudinal levelling of ALU START rods.

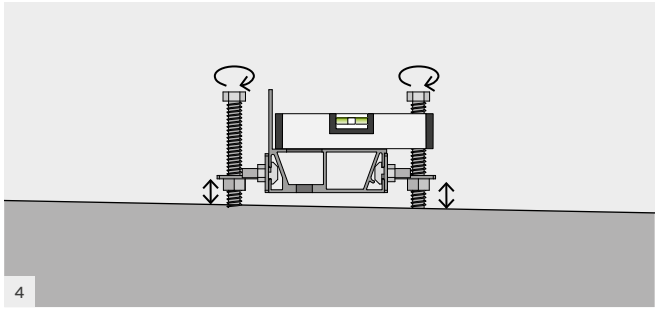

Lateral levelling of the rods.

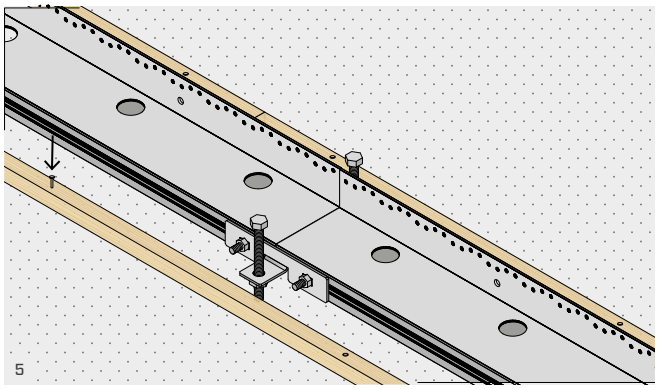

Construction of formwork with timber battens.

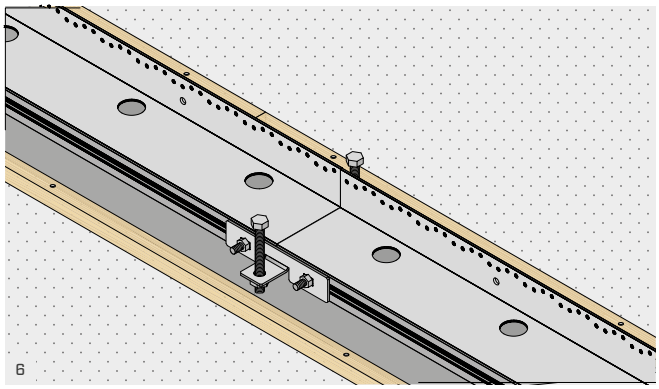

Creation of the grout between the profile and the concrete support.

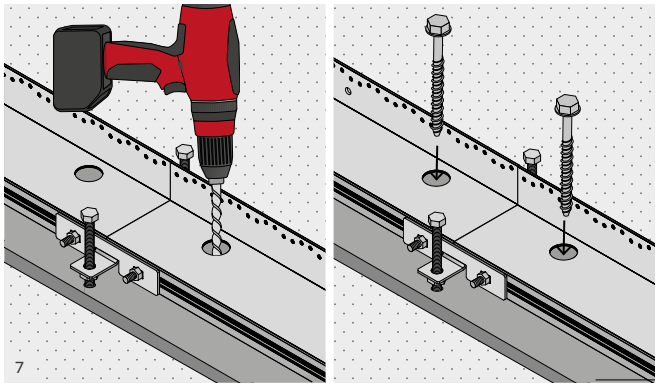

Insert the concrete anchors following the anchor installation instructions.

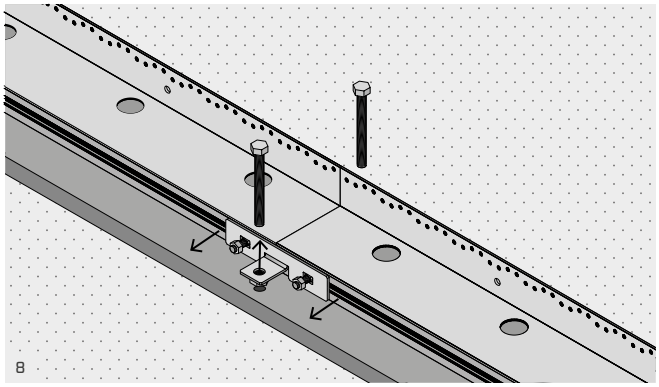

Removal of JIG START templates, which can be reused.

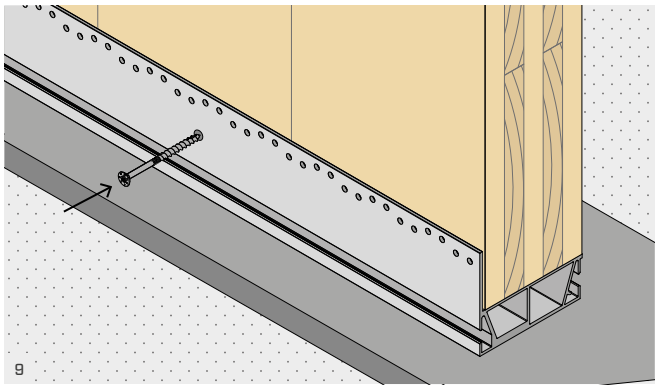

Positioning of the walls using Ø6 or Ø8 screws to bring the panel closer to the aluminium profile.

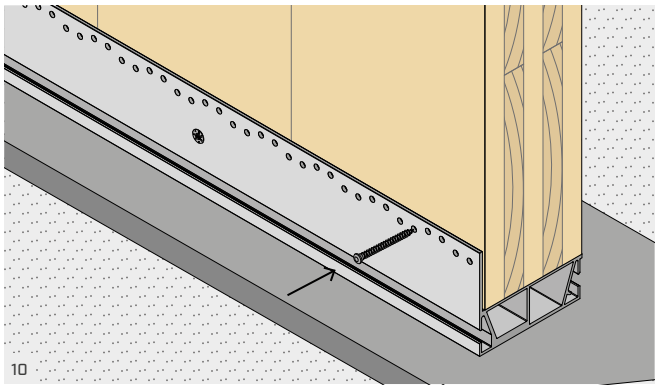

Profiles fastening with nails or screws.

PARTIAL FASTENING PATTERNS

It is possible to apply partial nailing patterns according to the design and installation requirements of the walls.

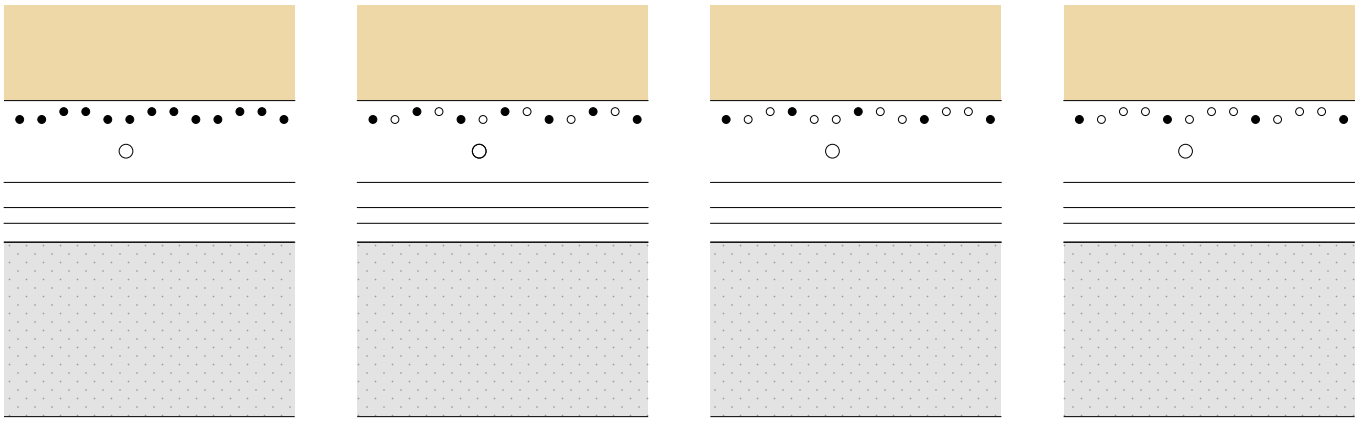

TOTAL FASTENING* | PATTERN 1 | PATTERN 2 | PATTERN 3

* This pattern is not suitable for solid timber/glulam in the presence of shear loads $F_{2/3}$.

pattern	fastening holes Ø5		
	type	Ø x L [mm]	n_v [pcs/m]
total	LBA LBS	Ø4 x 60 Ø5 x 50	71
pattern 1			35
pattern 2			23
pattern 3			17

STRUCTURAL VALUES | TIMBER-TO-CONCRETE | $F_{1,c}$

It is possible to cut the profiles according to the design requirements; profiles with length less than 600 mm are to be considered for compressive strength only.

STRENGTH ON ALUMINIUM SIDE

		ALUMINIUM		
configuration	**reference width** [mm]	γ_{alu}	$R_{1,c,k}$ [kN/m]	$\rho_{1,c,Rk}$ [MPa]
ALUSTART35	-	γ_{M1}	**88,8**	**2,5**
ALUSTART80	80		**504,2**	**6,3**
ALUSTART100	100		**630,2**	**6,3**
ALUSTART120	120		**961,1**	**8,0**
ALUSTART100 + ALUSTART35	135		**719,0**	**6,3(1) + 2,5(2)**
ALUSTART120 + ALUSTART35	155		**1049,9**	**8,0(1) + 2,5(2)**
ALUSTART175	175		**1540,6**	**8,8**
ALUSTART120 + 2x ALUSTART35	190		**1138,7**	**8,0(1) + 2,5 (2)**
ALUSTART175 + ALUSTART35	210		**1629,4**	**8,8(1) + 2,5(2)**
ALUSTART175 + 2x ALUSTART35	245		**1718,2**	**8,8(1) + 2,5(2)**

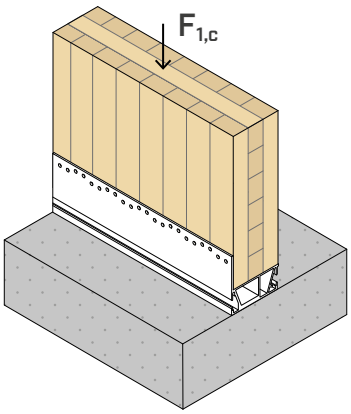

(1) Value referred to the main profile.
(2) Value referred to ALUSTART35 extension.

For walls of different widths to the reference width, the compression strength of the aluminium profile can be calculated by multiplying the parameter $\rho_{1,c,Rk}$ by the actual width of the wall.

For example, for a wall thickness of 140 mm, the ALUSTART100 profile coupled with ALUSTART35 will be used. Accordingly, $R_{1,c,k}$ is calculated as follows:
$R_{1,c,k} = 6,30 \cdot 100 + 2,54 \cdot 35 = 719$ kN/m

The compression strength of the timber wall should be calculated by the designer according to EN 1995:2014.

STRUCTURAL VALUES | TIMBER-TO-CONCRETE | $F_{1,t}$

STRENGTH ON TIMBER-TO-ALUMINIUM SIDE

		CLT	C/GL	ALUMINIUM		CONCRETE	
profile	**pattern**	$R_{1,t\,k\,timber}$ [kN/m]		$R_{1,t\,k\,alu}$ [kN/m]	γ_{alu}	$k_{t,\,overall}$	$K_{1,t\,ser}$ [N/mm · 1/m]
ALUSTART80	total	**130,0**	**108,0**	102	γ_{M1}	1,88	7200
	pattern 1	**64,5**	**53,0**				
	pattern 2	**42,0**	**36,5**				
	pattern 3	**31,0**	**26,0**				
ALUSTART100	total	**130,0**	**108,0**			1,62	
	pattern 1	**64,5**	**53,0**				
	pattern 2	**42,0**	**35,0**				
	pattern 3	**31,0**	**26,0**				
ALUSTART120	total	**130,0**	**108,0**			1,44	
	pattern 1	**64,5**	**53,0**				
	pattern 2	**42,0**	**35,0**				
	pattern 3	**31,0**	**26,0**				
ALUSTART175	total	**130,0**	**108,0**			1,23	
	pattern 1	**64,5**	**53,0**				
	pattern 2	**42,0**	**35,0**				
	pattern 3	**31,0**	**26,0**				

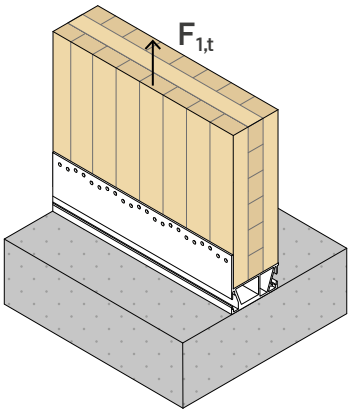

• C/GL: solid timber or glulam.
The installation of the ALUSTART35 extension, or the presence of a grout layer up to 30 mm with minimum class M10, do not affect the values in the table.

CONCRETE STRENGTH

profile	configuration on concrete	holes fixing Ø12 type	holes fixing Ø12 Ø x L [mm]	total fastening 5 anchors/m $R_{1,t\,d\,concrete}$ [kN/m]	partial fastening 2,5 anchors/m $R_{1,t\,d\,concrete}$ [kN/m]
ALUSTART80	uncracked	VIN-FIX 5.8/8.8	M12 x 140	**48,6**	**24,3**
		HYB-FIX 8.8	M12 x 140	**86,5**	**43,3**
		SKR	12 x 90	**28,1**	**14,1**
		AB1	M12 x 100	**49,2**	**24,6**
	cracked	VIN-FIX 5.8/8.8	M12 x 195	**38,9**	**19,5**
		HYB-FIX 8.8	M12 x 195	**70,2**	**35,1**
		SKR	12 x 90	**15,2**	**7,6**
		AB1	M12 x 100	**31,5**	**15,7**
	seismic	EPO-FIX 8.8	M12 x 195	**42,4**	**21,2**
ALUSTART100	uncracked	VIN-FIX 5.8/8.8	M12 x 140	**56,4**	**28,2**
		HYB-FIX 8.8	M12 x 120	**100,4**	**50,2**
		SKR	12 x 90	**32,6**	**16,3**
		AB1	M12 x 100	**57,0**	**28,5**
	cracked	VIN-FIX 5.8/8.8	M12 x 195	**45,2**	**22,6**
		HYB-FIX 8.8	M12 x 195	**81,5**	**40,7**
		SKR	12 x 90	**17,7**	**8,8**
		AB1	M12 x 100	**36,5**	**18,3**
	seismic	EPO-FIX 8.8	M12 x 195	**49,2**	**24,6**
ALUSTART120	uncracked	VIN-FIX 5.8/8.8	M12 x 140	**63,5**	**31,7**
		HYB-FIX 8.8	M12 x 120	**113,0**	**56,5**
		SKR	12 x 90	**36,7**	**18,3**
		AB1	M12 x 100	**64,2**	**32,1**
	cracked	VIN-FIX 5.8/8.8	M12 x 195	**50,8**	**25,4**
		HYB-FIX 8.8	M12 x 195	**91,7**	**45,8**
		SKR	12 x 90	**19,9**	**10,0**
		AB1	M12 x 100	**41,1**	**20,5**
	seismic	EPO-FIX 8.8	M12 x 195	**55,3**	**27,7**
ALUSTART175	uncracked	VIN-FIX 5.8/8.8	M12 x 140	**74,3**	**37,2**
		HYB-FIX 8.8	M12 x 120	**132,3**	**66,1**
		SKR	12 x 90	**43,0**	**21,5**
		AB1	M12 x 100	**75,1**	**37,6**
	cracked	VIN-FIX 5.8/8.8	M12 x 195	**59,5**	**29,7**
		HYB-FIX 8.8	M12 x 195	**107,3**	**53,7**
		SKR	12 x 90	**23,3**	**11,7**
		AB1	M12 x 100	**48,1**	**24,1**
	seismic	EPO-FIX 8.8	M12 x 195	**64,8**	**32,4**

ANCHORS VERIFICATION FOR STRESS LOADING $F_{1,t}$

Fastening elements to the concrete through anchors shall be verified according to the load acting on the anchor, which can be evaluated through the tabulated geometric parameters (k_t).

The anchor group must be verified for:

$N_{Ed,z,bolts} = F_{1,t} \times k_{1,t,overall}$

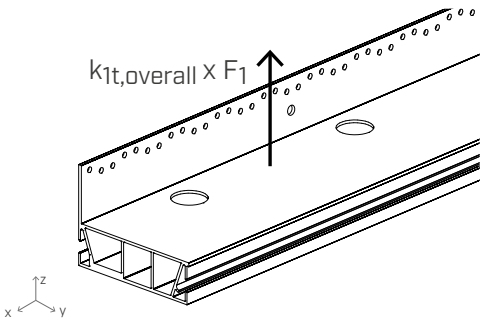

STRUCTURAL VALUES | TIMBER-TO-CONCRETE | $F_{2/3}$

STRENGTH ON TIMBER-TO-ALUMINIUM SIDE

		CLT	C/GL	CONCRETE		
profile	**pattern**	**$R_{2/3,k\ timber}$** [kN/m]		**e_y** [mm]	**e_z** [mm]	**$K_{2/3,ser}$** [N/mm · 1/m]
ALUSTART80	total	**112,4**	**-**	29,5	80,5	12000
	pattern 1	**55,4**	**44,7**			8000
	pattern 2	**36,4**	**29,4**			4000
	pattern 3	**26,9**	**21,7**			3000
ALUSTART100	total	**112,4**	**-**			12000
	pattern 1	**55,4**	**44,7**			8000
	pattern 2	**36,4**	**29,4**			4000
	pattern 3	**26,9**	**21,7**			3000
ALUSTART120	total	**105,9**	**-**			12000
	pattern 1	**52,2**	**42,1**			8000
	pattern 2	**34,3**	**27,7**			4000
	pattern 3	**25,3**	**20,4**			3000
ALUSTART175	total	**90,2**	**-**			12000
	pattern 1	**44,4**	**35,8**			8000
	pattern 2	**29,2**	**23,6**			4000
	pattern 3	**21,6**	**17,4**			3000

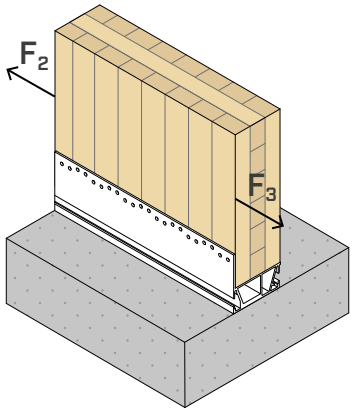

• C/GL: solid timber or glulam
The installation of the ALUSTART35 extension, or the presence of a grout layer up to 30 mm with minimum class M10, do not affect the values in the table.

CONCRETE STRENGTH

			total fastening 5 anchors/m	**partial fastening** 2,5 anchors/m
configuration on concrete	**fastening holes Ø12** **type**	**Ø x L** [mm]	**$R_{2/3,d\ concrete}$** [kN/m]	
uncracked	VIN-FIX 5.8	M12 x 140	**94,0**	**47,0**
	VIN-FIX 8.8	M12 x 140	**129,0**	**64,5**
	SKR	12 x 90	**83,0**	**41,5**
	AB1	M12 x 100	**94,6**	**50,3**
cracked	VIN-FIX 5.8	M12 x 195	**94,0**	**47,0**
	VIN-FIX 8.8	M12 x 195	**106,0**	**53**
	HYB-FIX 8.8	M12 x 195	**129,0**	**64,5**
	SKR	12 x 90	**54,2**	**27,1**
	AB1	M12 x 100	**94,6**	**50,5**
seismic	EPO-FIX 8.8	M12 x 195	**51,2**	**25,6**

ANCHORS VERIFICATION FOR STRESS LOADING $F_{2/3}$

Fastening to concrete using alternative anchors must be verified on the basis of the load acting on the anchors, which depend on the fastening configuration. In order to consider an anchor as a reagent it is necessary that the distance of the anchor from the profile edge is at least 50 mm.

The anchor group must be verified for:

$V_{Ed,x,bolts} = F_{2/3}$
$M_{Ed,z,bolts} = F_{2/3,d} \times e_y$
$M_{Ed,x,bolts} = F_{2/3,d} \times e_z$

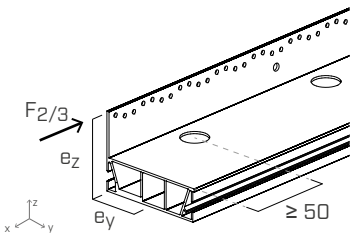

In which $F_{2/3,d}$ represents the shear stress acting on the ALU START connector.
The check is satisfied if the design shear strength of the anchor group is greater than the design stress: $R_{2/3,d\ concrete} \geq F_{2/3,d}$.

STRUCTURAL VALUES | TIMBER-TO-CONCRETE | F_4

STRENGTH ON TIMBER-TO-ALUMINIUM SIDE

	ALUMINIUM		CONCRETE	
profile	**$R_{4,k\ alu}$** [kN/m]	γ_{alu}	**$k_{4t,\ overall}$**	**$K_{4,ser}$** [N/mm · 1/m]
ALUSTART*	**100**	γ_{M1}	1,84	27000

* valid for all profiles.

The installation of the ALUSTART35 extension, or the presence of a grout layer up to 30 mm with minimum class M10, do not affect the values in the table.

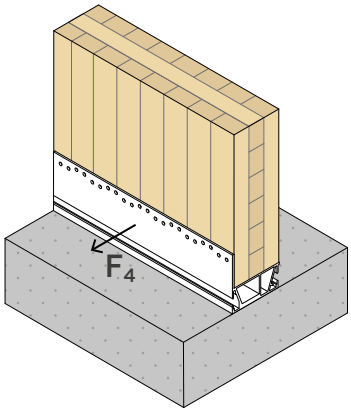

SHEAR STRENGTH ON CONCRETE SIDE

			total fastening 5 anchors/m	**partial fastening** 2,5 anchors/m
configuration on concrete	**fastening holes Ø12** **type**	**Ø x L** [mm]	**$R_{4,d\ concrete}$** [kN/m]	
uncracked	VIN-FIX 5.8	M12 x 140	**48,6**	**24,3**
	HYB-FIX 8.8	M12 x 120	**83,3**	**41,7**
	SKR	12 x 90	**28,3**	**14,2**
	AB1	M12 x 100	**48,5**	**24,3**
cracked	VIN-FIX 5.8	M12 x 195	**38,9**	**19,5**
	HYB-FIX 8.8	M12 x 195	**67,7**	**33,8**
	SKR	12 x 90	**17,5**	**8,8**
	AB1	M12 x 100	**31,7**	**15,8**
seismic	EPO-FIX 8.8	M12 x 195	**33,1**	**16,5**

ANCHORS VERIFICATION FOR STRESS LOADING F_4

Fastening to concrete using alternative anchors must be verified on the basis of the load acting on the anchors, which depend on the fastening configuration.

The anchor group must be verified for:

$V_{Ed,y,bolts} = F_{4,Ed}$
$N_{Ed,z,bolts} = F_{4,Ed} \times k_{4t,overall}$

In which $F_{4,d}$ represents the shear stress acting on the ALU START connector.

The check is satisfied if the design shear strength of the anchor group is greater than the design stress: $R_{4,d} \geq F_{4,d}$.

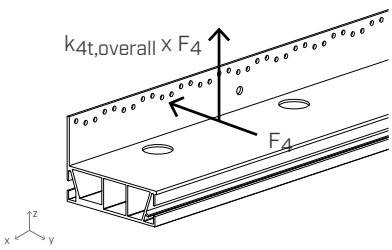

STRUCTURAL VALUES | TIMBER-TO-CONCRETE | F_5

STRENGTH ON TIMBER-TO-ALUMINIUM SIDE

		CLT	C/GL	CONCRETE	
profile	**pattern**	**$R_{5,k\ timber}$** [kN/m]		**$k_{5t,overall}$**	**$K_{5,ser}$** [N/mm · 1/m]
ALUSTART80	total	**25,8**	**23,9**	1,83	5500
	pattern 1	**25,8**	**23,9**		
	pattern 2	**18,9**	**23,9**		
	pattern 3	**13,5**	**19,6**		
ALUSTART100	total	**25,8**	**23,9**	1,53	
	pattern 1	**25,8**	**23,9**		
	pattern 2	**18,9**	**23,9**		
	pattern 3	**13,5**	**19,6**		
ALUSTART120	total	**25,8**	**23,9**	1,39	
	pattern 1	**25,8**	**23,9**		
	pattern 2	**18,9**	**23,9**		
	pattern 3	**13,5**	**19,6**		
ALUSTART175	total	**25,8**	**23,9**	1,28	
	pattern 1	**25,8**	**23,9**		
	pattern 2	**18,9**	**23,9**		
	pattern 3	**13,5**	**19,6**		

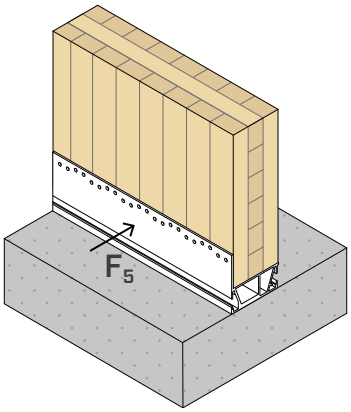

• C/GL: solid timber or glulam.
The installation of the ALUSTART35 extension, or the presence of a grout layer up to 30 mm with minimum class M10, do not affect the values in the table.

CONCRETE STRENGTH

			total fastening 5 anchors/m	**partial fastening** 2,5 anchors/m
configuration on concrete	**fastening holes Ø12** **type**	**Ø x L** [mm]	**$R_{5,d\ concrete}$** [kN/m]	
uncracked	VIN-FIX 5.8	M12 x 140	**48,6**	**24,3**
	HYB-FIX 8.8	M12 x 120	**83,3**	**41,7**
	SKR	12 x 90	**28,3**	**14,2**
	AB1	M12 x 100	**48,5**	**24,3**
cracked	VIN-FIX 5.8	M12 x 195	**38,9**	**19,5**
	HYB-FIX 8.8	M12 x 195	**67,7**	**33,8**
	SKR	12 x 90	**17,5**	**8,8**
	AB1	M12 x 100	**31,7**	**15,8**
seismic	EPO-FIX 8.8	M12 x 195	**33,1**	**16,5**

* $k_{5t,overall}$ was assumed to be 1,83 for safety reasons.

ANCHORS VERIFICATION FOR STRESS LOADING F_5

Fastening to concrete using alternative anchors must be verified on the basis of the load acting on the anchors, which depend on the fastening configuration.

The anchor group must be verified for:

$V_{Ed,y,bolts} = F_{5,Ed}$
$N_{Ed,z,bolts} = F_{5,Ed} \times k_{5t,overall}$

In which $F_{5,d}$ represents the shear stress acting on the ALU START connector.

The check is satisfied if the design shear strength of the anchor group is greater than the design stress: $R_{5,d} \geq F_{5,d}$.

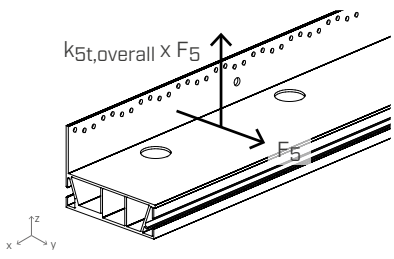

ANCHORS INSTALLATION PARAMETERS

profile	anchor type		t_{fix}	h_{ef}	h_{nom}	h_1	d_0	h_{min}
	type	Ø x L [mm]	[mm]	[mm]	[mm]	[mm]	[mm]	[mm]
ALU START*	VIN-FIX 5.8	M12 x 140	7	115	115	120	14	200
	VIN-FIX 8.8	M12 x 140	7	115	115	120	14	
	HYB-FIX 8.8	M12 x 140	7	115	115	120	14	
	SKR	12 x 90	7	64	83	105	10	
	AB1	M12 x 100	7	70	80	85	12	
	VIN-FIX 5.8	M12 x 195	7	165	165	170	14	
	VIN-FIX 8.8	M12 x 195	7	165	165	170	14	
	HYB-FIX 8.8	M12 x 195	7	165	165	170	14	
	EPO-FIX 8.8	M12 x 195	7	170	170	175	14	

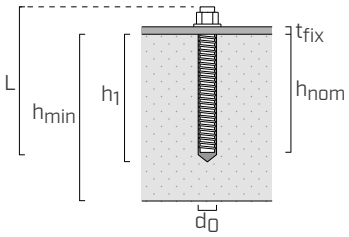

t_{fix} fastened plate thickness
h_{nom} nominal anchoring depth
h_{ef} effective anchoring depth
h_1 minimum hole depth
d_0 hole diameter in the concrete support
h_{min} concrete minimum thickness

Precut INA threaded rod, with nut and washer: see page 562.
MGS threaded rod class 8.8 to be cut to size: see page 174.
* The values in the table are valid for all ALU START profiles.

ALUSTART | COMBINED STRESSES

With regard to timber and aluminium, it is possible to combine the effect of the different actions through the following expressions:

$$\left(\frac{F_{1,t,Ed}}{R_{1,t,d}}\right)^2 + \left(\frac{F_{2/3,Ed}}{R_{2/3,d}}\right)^2 + \left(\frac{F_{4,Ed}}{R_{4,d}}\right)^2 \leq 1$$

$$\left(\frac{F_{1,t,Ed}}{R_{1,t,d}}\right)^2 + \left(\frac{F_{2/3,Ed}}{F_{2/3,d}}\right)^2 + \left(\frac{F_{5,Ed}}{R_{5,d}}\right)^2 \leq 1$$

Regarding checks on the anchor side, the results of the loads must be applied to the group of anchors, following the indications of the diagrams relating to each load direction.

GENERAL PRINCIPLES

- Characteristic values comply with the EN 1995:2014 standard in accordance with ETA-20/0835.
- The design values of the anchors for concrete are calculated in accordance with the respective European Technical Assessments.
- Design values can be obtained from characteristic values as follows:

$$R_{1,c,d} = \frac{R_{1,c,k}}{\gamma_{alu}} \cdot l$$

$$R_{1,t,d} = min \begin{cases} \frac{R_{1,t,k\ timber} \cdot k_{mod}}{\gamma_M} \cdot l \\ \frac{R_{1,t,k\ alu}}{\gamma_{alu}} \cdot l \\ R_{1,t,d\ concrete} \cdot l^* \end{cases}$$

$$R_{2/3,d} = min \begin{cases} \frac{R_{2/3,k\ timber} \cdot k_{mod}}{\gamma_M} \cdot l \\ \frac{R_{2/3,k\ alu}}{\gamma_{alu}} \cdot l \\ R_{2/3,d\ concrete} \cdot l^* \end{cases}$$

$$R_{4,d} = min \begin{cases} \frac{R_{4,k\ alu}}{\gamma_{alu}} \cdot l \\ R_{4,d\ concrete} \cdot l^* \end{cases}$$

$$R_{5,d} = min \begin{cases} \frac{R_{5,k\ timber} \cdot k_{mod}}{\gamma_M} \cdot l \\ R_{5,d\ concrete} \cdot l^* \end{cases}$$

The dimension l is the length of the profile used, to be used in metres in the formulas. The minimum length is 600 mm, except in the case where the profile is subject to compression.

The dimension l* is the length of the profile used approximated to the lower multiple of 200 mm, to be used in metres in the formulas. The minimum length is 600 mm.

E.g. l = 680 mm l*= 600 mm

- The calculation process used a timber characteristic density of ρ_k=350 kg/m^3 for timber and ρ_k=385 kg/m^3 for CLT of timber C24. A C25/30 class concrete with a thin reinforcement and minimum thickness indicated in the table has been considered.
- Dimensioning and verification of timber and concrete elements must be carried out separately.
- The strength values on the concrete side are valid for the calculation hypothesis defined in the respective tables; for boundary conditions different from the ones in the table (e.g. minimum distances from the edge, lower number of anchors/m), the anchors-to-concrete can be verified using MyProject calculation software according to the design requirements.

The anchors seismic design was carried out in performance category C2, without ductility requirements on anchors (option a2) elastic design according to EN 1992:2018, with α_{sus}= 0,6. For chemical anchors it is assumed that the annular space between the anchor and the plate hole is filled (α_{gap} = 1).

- The product ETAs for the anchors used in the concrete-side strength calculation are indicated below:
  - VIN-FIX chemical anchor according to ETA-20/0363;
  - HYB-FIX chemical anchor according to ETA-20/1285;
  - EPO-FIX chemical anchor according to ETA-23/0419;
  - SKR screw-in anchor according to ETA-24/0024;
  - AB1 mechanical anchor according to ETA-17/0481 (M12).

INTELLECTUAL PROPERTY

- An ALU START model is protected by the Registered Community Design RCD 008254353-0002.

TITAN DIVE

ADVANCED HIGH-TOLERANCE ANGLE BRACKET

INNOVATIVE
The innovative system with special corrugated tubes and angle brackets represents a new method of ground fastening, with the reliability of an anchor pre-installed in concrete and the tolerance of a post-installed anchor.

FREEDOM OF INSTALLATION
It allows maximum freedom in the installation of timber walls by avoiding the need to drill holes in the concrete substrate, which saves considerable time on site.

TOLERANCE MANAGEMENT
The corrugated tube system allows a tolerance of 22 mm in each direction and an inclination of ±13°.

USA, Canada and more design values available online.

VIDEO

PATENTED

SERVICE CLASS SC1 SC2

MATERIAL

S235 Fe/Zn12c **TDN240**: S235 + Fe/Zn12c carbon steel

DX51D Z275 **TDS240**: DX51D + Z275 carbon steel

EXTERNAL LOADS

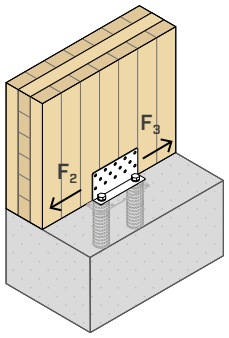









FIELDS OF USE

Fastening on concrete of timber walls, beams or columns.
The angle brackets are fastened inside corrugated pipes prepared in the casting.
Maximum installation tolerance.

Can be applied to:
- TIMBER FRAME walls
- CLT and LVL panel walls
- solid timber or glulam beams or columns





THIN KERBS

Installing the angle bracket in the wall thickness allows for the construction of walls on very thin reinforced concrete kerbs.

CLT AND TIMBER FRAME

The TDS240 model with 8 mm HBS PLATE screws is ideal for installation on CLT walls, while the TDN240 model can be used on any type of wall.

CODES AND DIMENSIONS

CORRUGATED PIPES

CODE	D [mm]	I [mm]	H [mm]	*D [in]*	*I [in]*	*H [in]*	pcs
CD60180	60	180	200	*2 3/8*	*7 1/8*	*8*	1

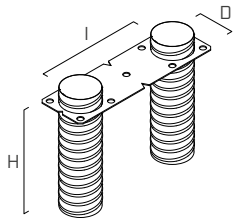

ANGLE BRACKETS

	CODE	B [mm]	P [mm]	H [mm]	HL [mm]	*B [in]*	*P [in]*	*H [in]*	*HL [in]*	pcs
1	**TDN240**	240	100	70	180	*9 1/2*	*4*	*2 3/4*	*8*	1
2	**TDS240**	240	50	125	180	*9 1/2*	*1 15/16*	*4 15/16*	*8*	1

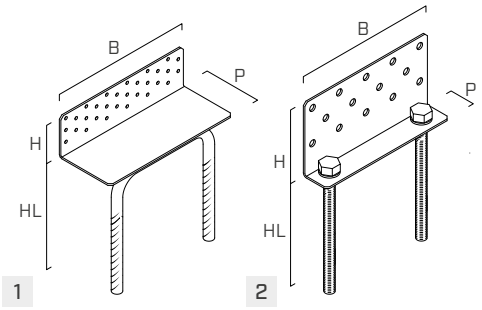

GEOMETRY

CD60180

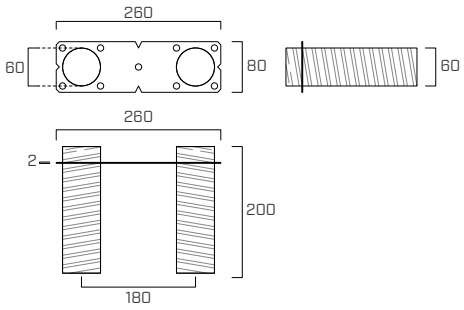

TDN240

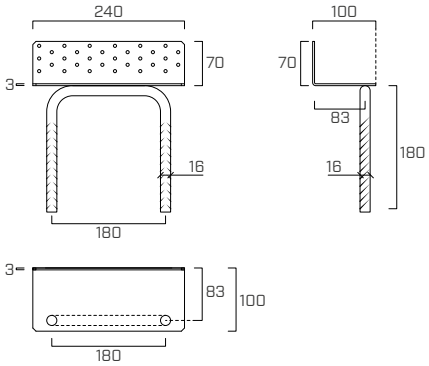

TDS240

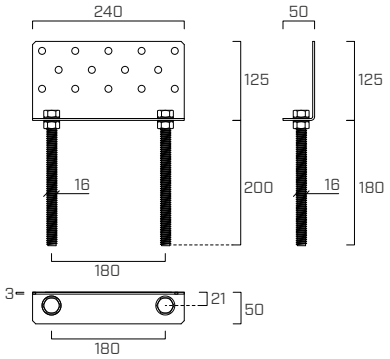

FASTENERS

type	description	d [mm]	support	page
LBA	high bond nail	4		570
LBS	round head screw	5		571
HBS PLATE	pan head screw	8		573

PREPARATION OF THE CONCRETE KERB

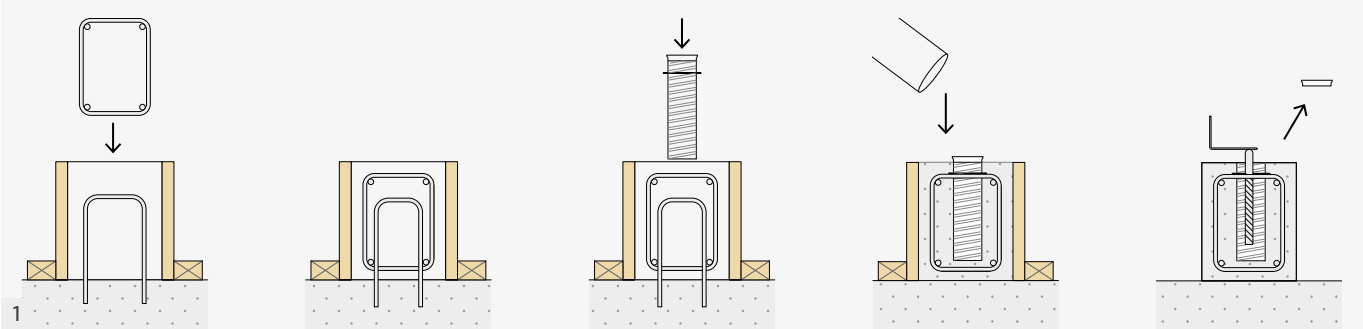

After preparing the formwork for casting and after positioning the reinforcement rods, the pipes (CD60180) are inserted, taking care to fasten them properly to the brackets or formwork to keep them in position during casting operations. Alignment of the centre of the system is facilitated by markings on the edges of the plate.

Concrete is poured into the formwork. After the casting has hardened, it is possible to proceed with the removal of formwork and positioning of the levelling shims. The angle bracket can be installed after removing the plugs.

WALL INSTALLATION AND FASTENING

The walls can be installed in different ways:

VARIANT A: PRE-INSTALLED ANGLE-BRACKET WITH END CASTING

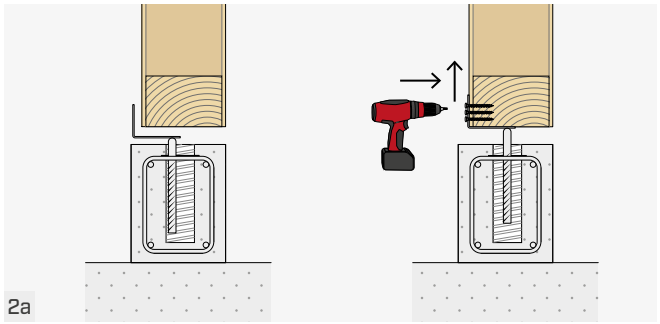

Wall installation using "SHIM" spacer elements. The plate is then fastened with nails or screws.

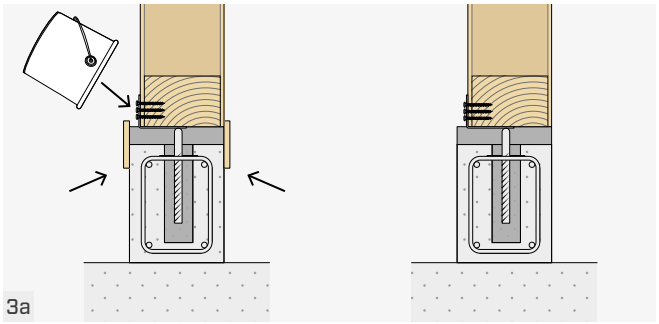

Preparation of the sides for pouring the compensated-shrinkage structural grout, taking care to start pouring in the vicinity of the corrugated pipes.

VARIANT B: PRE-INSTALLED ANGLE BRACKET WITH INTERMEDIATE CASTING

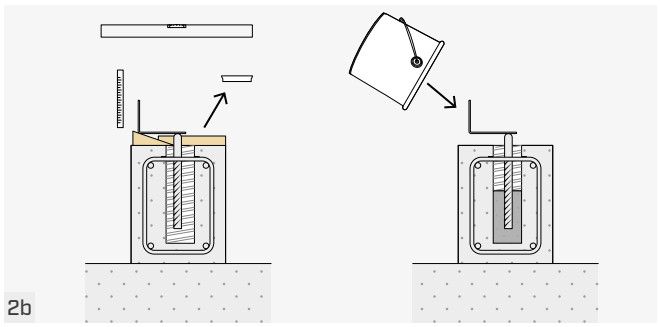

In this case, the angle brackets form the reference (planimetric and altimetric alignment) for installing the walls. After the angle brackets have been placed in their final position, the partial pouring of grout into the corrugated pipes is carried out.

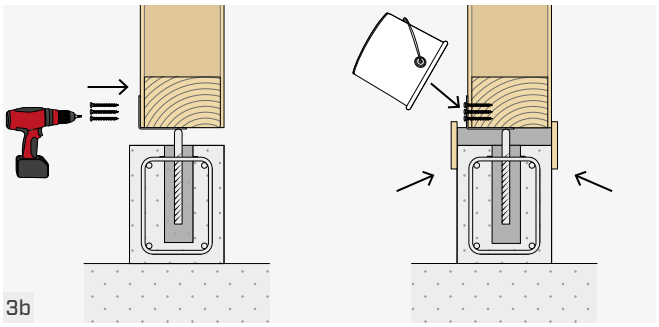

The wall is installed and the angle brackets are fastened following the of intermediate spacers (SHIM) pre-arrangement. The last operation is the completion of the levelling casting with non-shrinkage grout inside the corrugated pipes and below the wall.

VARIANT C: POST INSTALLED ANGLE BRACKET

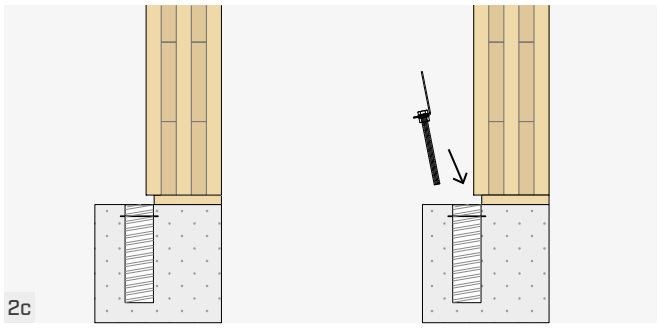

After positioning and levelling the wall with shims (SHIM), the angle brackets are placed in the corrugated tubes.

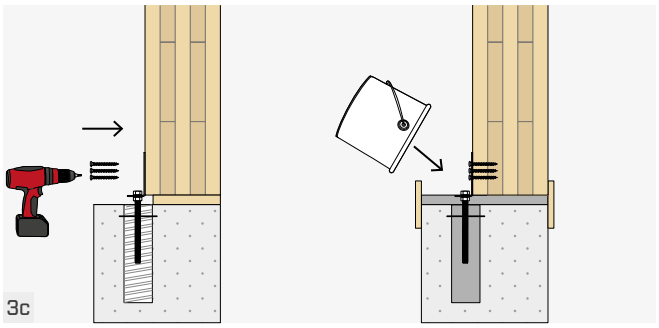

The last step is the preparation of the sides for pouring the structural compensated shrinkage grout and the casting, taking care to start the casting in the vicinity of the corrugated pipes.

ADDITIONAL PRODUCTS



PROTECT
SELF-ADHESIVE BUTYL BAND, CAN BE PLASTERED



START BAND
WATERPROOFING PROFILE WITH HIGH MECHANICAL RESISTANCE

SHIM LARGE
LARGE BIOPLASTIC SPACERS



Find out more at www.rothoblaas.com.

FASTENING PATTERNS

TDN240 | TIMBER-TO-CONCRETE

INSTALLATION ON TIMBER FRAME

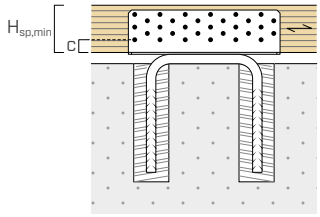

pattern 1

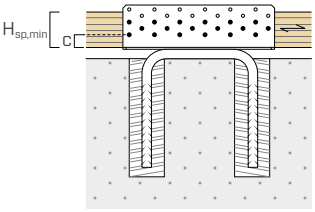

pattern 2

INSTALLATION ON CLT

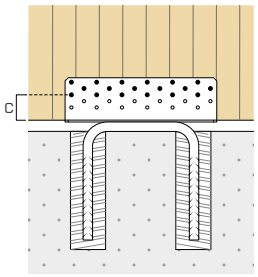

pattern 3

CODE	configuration	fastening holes Ø5			c	$H_{sp,min}$	$R_{2/3,K}$ [1]
		type	Ø x L [mm]	n_V [pcs]	[mm]	[mm]	[kN]
TDN240	pattern 1	LBA LBS	Ø4 x 60 Ø5 x 70	30	20	80	51,8
	pattern 2	LBA LBS	Ø4 x 60 Ø5 x 70	18	20	60	34,4
	pattern 3	LBA LBS	Ø4 x 60 Ø5 x 70	18	40	-	-

TDS240 | TIMBER-TO-CONCRETE

INSTALLATION ON CLT

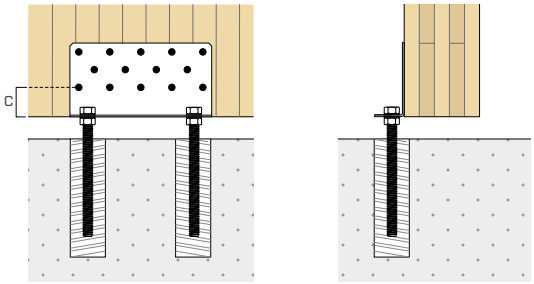

pattern 1
POST INSTALLED

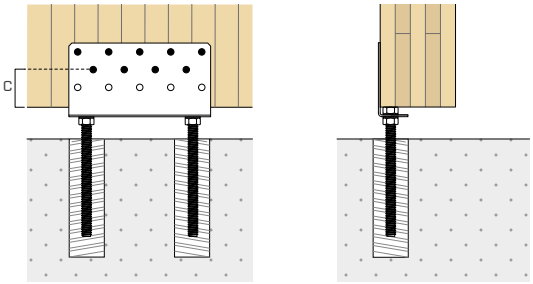

pattern 2
PRE INSTALLED

CODE	configuration	holes fixing Ø11			c	$R_{2/3,K}$ [1]
		type	Ø x L [mm]	n_V [pcs]	[mm]	[kN]
TDS240	pattern 1	HBS PLATE	Ø8,0 x 80	14	50	70,3
	pattern 2	HBS PLATE	Ø8,0 x 80	9	65	36,1

NOTES

- The complete filling of the space between the angle bracket and reinforced concrete is considered, using non-shrinkage grout or a suitable material of equal performance.
- The minimum distances of the connectors from the edge are determined according to:
  - ÖNORM EN 1995-1-1 (Annex k) for nails and ETA-11/0030 for screws applied on CLT panels
  - according to ETA considering a density of timber elements $\rho_k < 420$ kg/m^3 for applications on framed walls or on glulam or C/GL solid timber

[1] $R_{2/3,k}$ is a preliminary structural strength value; a complete data sheet with the structural values defined by ETA will be available at www.rothoblaas.com.

INTELLECTUAL PROPERTY

- TITAN DIVE system and method protected by patent IT102021000031790

CONSTRUCTION TOLERANCES

The TDN/TDS angle bracket fastening to the corrugated pipes prepared in the concrete can be carried out according to two different methods depending on the kerb width and specific requirements.

The first method, in which the angle bracket must be positioned inside the CD60180 element tubes before the wall is installed, allows reducing the concrete kerb dimensions by inserting the angle bracket under the timber wall.

The second, which involves the angle bracket installation after the wall has been installed, can be particularly advantageous if a continuous foundation or kerb with sufficient width is available.

With the TITAN DIVE system, in both cases, it is possible to achieve high mechanical strengths and high relative tolerances between concrete foundations along the three main axes (x,y,z) and rotations in the horizontal plane (α). The use of a universal anchoring system to the foundation, pre-installed in the concrete casting, provides an excellent compromise to reduce the risks associated with different construction tolerances. Possible problems of misalignment between foundation and timber frame are mitigated by allowing, as in most currently available applications, independence of construction phases.

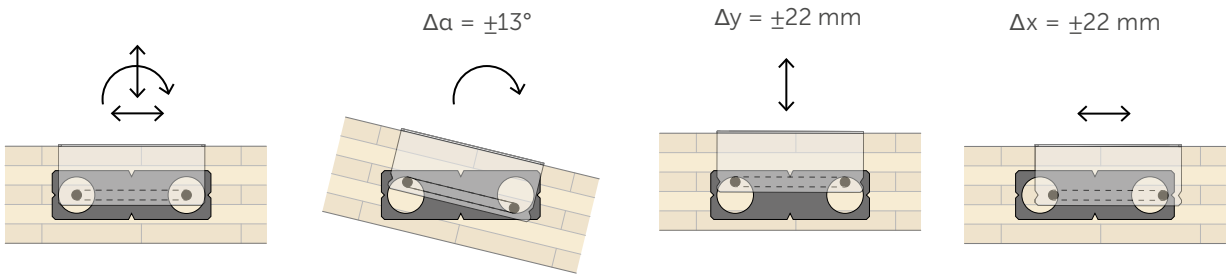

Another advantage over current applications is the avoidance of interference between the reinforcement pre-arranged in the concrete and the anchoring system. This considerably speeds up installation and guarantees the result especially in the case of thick reinforcement layer and reduces noise and dust produced during installation.

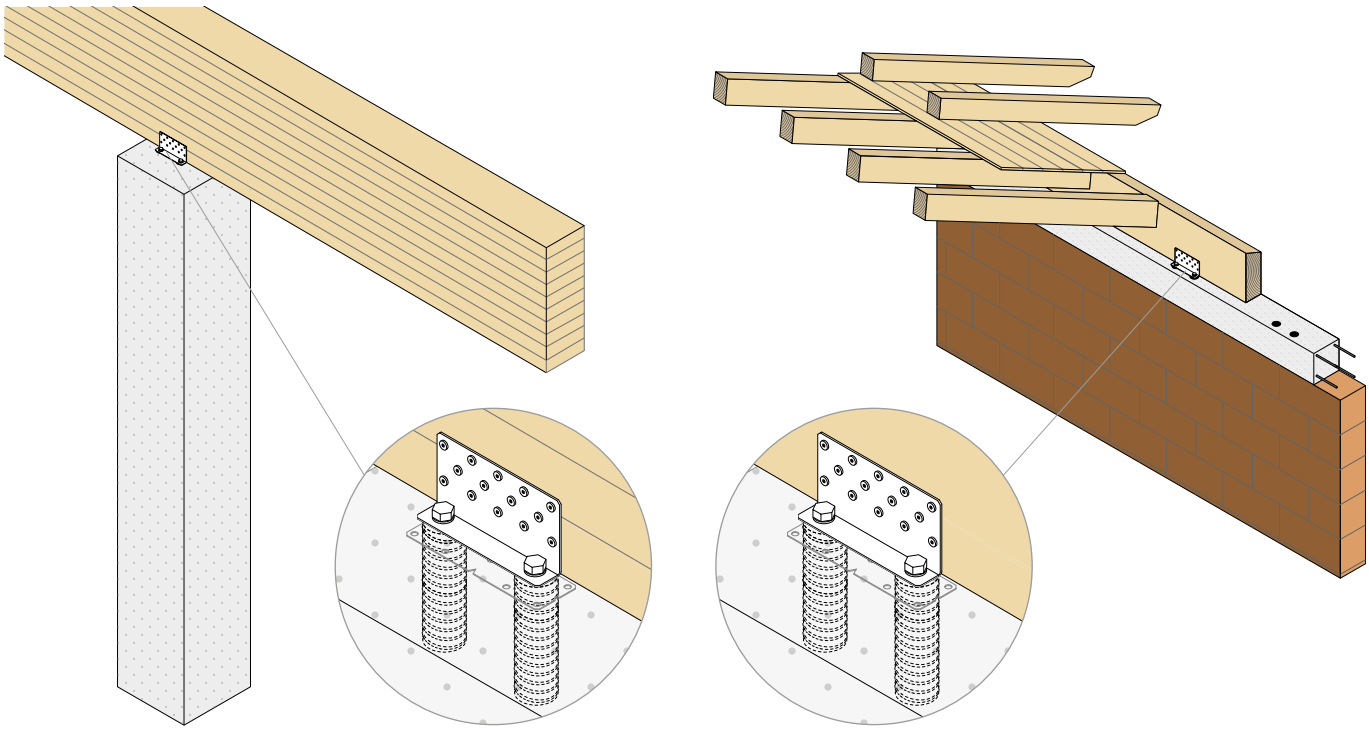

The TITAN DIVE connection system also allows interesting advantages in different fields of application. For example, it can be used to transfer shear forces between timber beams and prefabricated or in-situ reinforced concrete columns. Similarly, it can be used if reinforced concrete brackets or walls are used.
Anchor positioning tolerances and uncertainties related to installation tolerances (out-of-square, alignment, height, etc.) can be easily resolved by reducing the need for customised plates.
Another example, in the field of new or existing construction, is the connection node between the platform beam and the top concrete kerb. With the TITAN DIVE system, effective connections with wide installation tolerances can be achieved which allow the different construction phases to be untied and achieve an effective connection between the horizontal diaphragm and walls.

UP LIFT

SYSTEM FOR BUILDINGS RAISED INSTALLATION

DURABILITY
It allows the construction of timber walls resting on a reinforced concrete kerb. The raised installation allows the wall to be moved away from the ground for optimal durability.

TOLERANCE MANAGEMENT
The reinforced concrete kerb is executed after the construction of the timber building, allowing maximum freedom in positioning the walls on the reinforced concrete foundation.

STRENGTH
The supports carry the weight of the building up to the completion of the reinforced concrete kerb and resist tensile and shear forces caused by earthquake or wind.

USA, Canada and more design values available online.

VIDEO

SERVICE CLASS SC1 SC2

MATERIAL

S235 HDG S235 carbon steel with hot galvanising

EXTERNAL LOADS

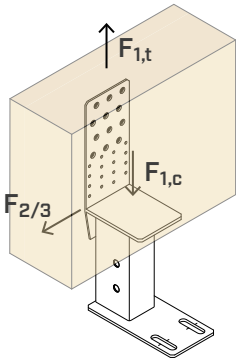

VIDEO
Scan the QR Code and watch the video on our YouTube channel



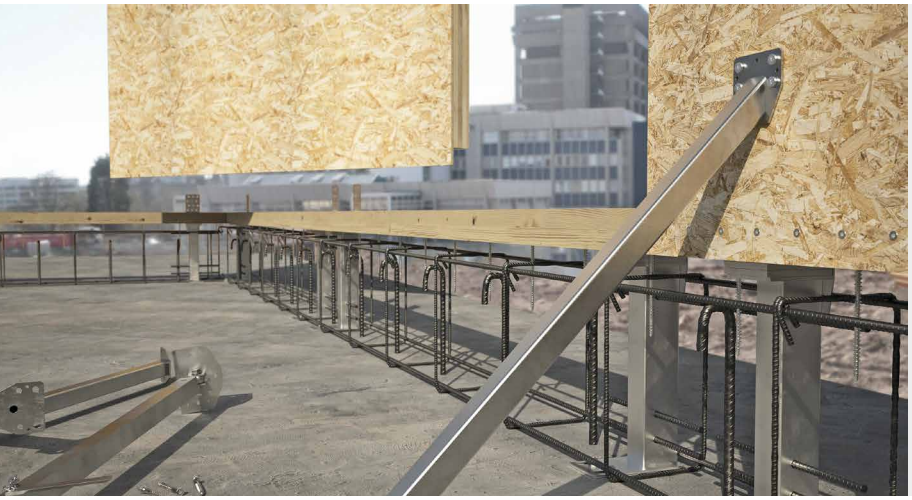

FIELDS OF USE

Ground connection of timber walls installed on reinforced concrete kerb.
The kerb is cast after the construction of the timber building.
Fastening with LBA nails, LBS screws or HBS PLATE screws.

Can be applied to:
- TIMBER FRAME walls
- CLT and LVL panel walls



DISRUPTIVE

It reverses the concept of a timber construction site: first the timber building is installed and then the concrete support is poured.

STRUCTURAL RESTORATION

UP LIFT can be used In the case of walls that have deteriorated due to the presence of moisture, by cutting the wall and casting the kerb in sections.

CODES AND DIMENSIONS

FIXED-HEIGHT SUPPORTS

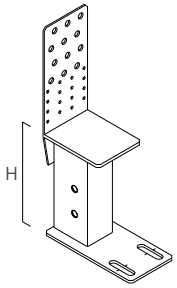

1

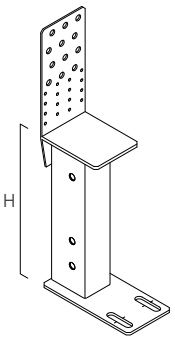

2

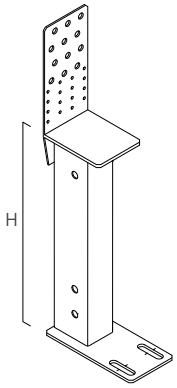

3

	CODE	H [mm]	*H* *[in]*	n_V Ø11 *n_V Ø0.44* [pcs]	n_V Ø5 *n_V Ø0.20* [pcs]	n_H Ø14 *n_H Ø0.56* [pcs]	pcs
1	**UPLIFT200**	200	*8*	12	16	2	1
2	**UPLIFT300**	300	*11 3/4*	12	16	2	1
3	**UPLIFT400**	400	*15 3/4*	12	16	2	1

SHIM PLATES

CODE	B [mm]	P [mm]	t [mm]	*B* *[in]*	*P* *[in]*	*t* *[in]*	pcs
SHIMS10012501	100	125	1	*4*	*4 15/16*	*1/32*	50
SHIMS10012502	100	125	2	*4*	*4 15/16*	*1/16*	25
SHIMS10012505	100	125	5	*4*	*4 15/16*	*3/16*	10
SHIMS10012510	100	125	10	*4*	*4 15/16*	*3/8*	5

The shim plates are manufactured from carbon steel.

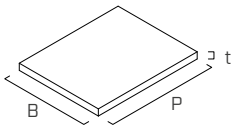

STABILIZATION SUPPORT

CODE	L [mm]	*L* *[in]*	n Ø13 *n Ø0.52* [pcs]	n Ø11 *n Ø0.44* [pcs]	n Ø6 *n Ø0.24* [pcs]	pcs
GIR451000	100	*4*	2+2	2+2	3+3	1

The stabilisation supports are manufactured from bright zinc-plated carbon steel.
The Ø13 (*Ø0.52*) holes can be used for fastening on concrete with Ø12 SKR anchors or on timber with Ø10 HBS PLATE screws.
The Ø11 (*Ø0.44*) holes can be used for fastening on timber with Ø8 HBS PLATE screws.
The Ø6 (*Ø0.24*) holes can be used for fastening on timber with Ø5 LBS screws.

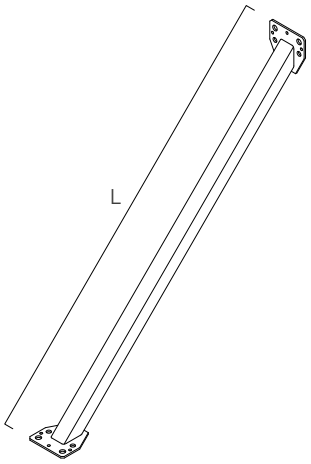

FASTENERS

type	description	d [mm]	support	page
LBA	high bond nail	4		570
LBS	round head screw	5		571
SKR	screw-in anchor	12		528
AB1	CE1 expansion anchor	12		536
HBS PLATE	pan head screw	8-10		573

GEOMETRY

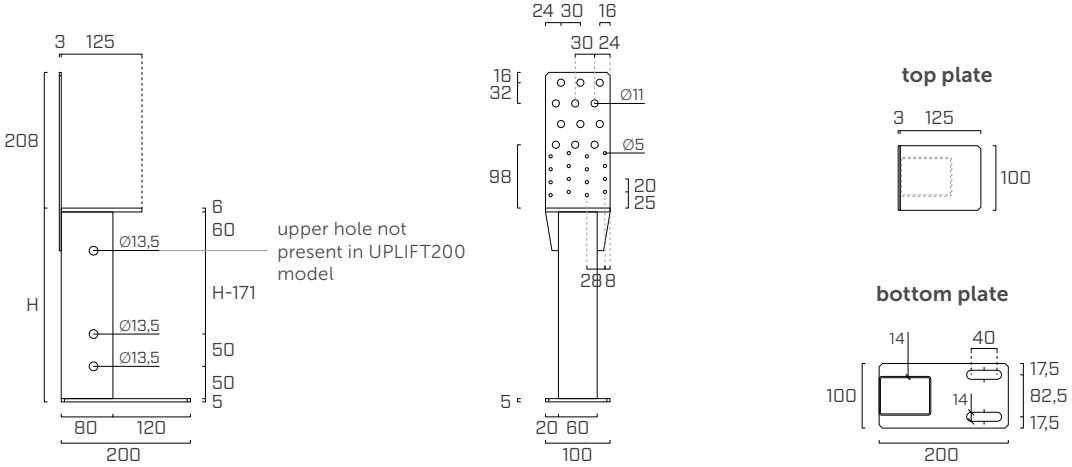

INSTALLATION

FASTENING PATTERNS

INSTALLATION ON CLT

INSTALLATION ON TIMBER FRAME

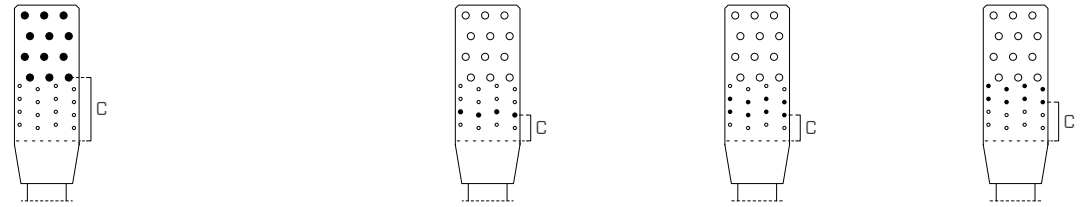

pattern 1 | pattern 2 | pattern 3 | pattern 4

INSTALLATION ON CLT

configuration	fasteners n - type	c [mm]	$H_{SHIM,max}$ [mm]	minimum distances $a_{3,t}$ [pcs]	minimum distances $a_{4,t}$ [pcs]
pattern 1	12 - HBS PLATE Ø8	98	50	48	48

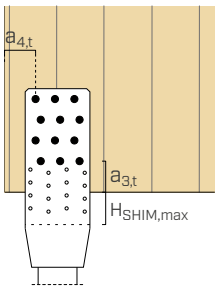

INSTALLATION ON TIMBER FRAME

configuration	fasteners n - type	c [mm]	$H_{SHIM,max}$ [mm]	$H_{SP,min}$ [mm]	minimum distances $a_{3,t}$ [pcs]	minimum distances $a_{4,t}$ [pcs]
pattern 2	4 - LBA Ø4	40	27	60	60	13
	4 - LBS Ø5				75	13
pattern 3	8 - LBA Ø4	40	27	80	60	13
	8 - LBS Ø5				75	13
pattern 4	8 - LBA Ø4	60	47	100	60	13
	8 - LBS Ø5				75	13

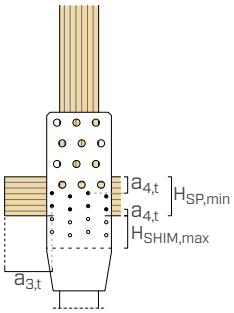

NOTES

- $H_{SHIM,\ max}$ is the maximum permissible height for shim plates.
- $H_{SP,\ min}$ is the maximum thickness of the timber element to be fastened, in the case of installation on framed walls.
- The maximum height of the $H_{SHIM\ max}$ levelling shims is determined taking into account the regulatory requirements for timber fastenings:
  - CLT: minimum distances according to ÖNORM EN 1995-1-1 (Annex K) for nails and ETA-11/0030 for screws.
  - C/GL: minimum distances for solid timber or glulam consistent with EN 1995-1-1:2014 according to ETA considering a timber density $\rho_k \leq 420$ kg/m^3.
- The minimum platform thickness $H_{SP\ min}$ was determined by considering $a_{4,t} \geq 13$ mm in accordance with the requirements of ETA-22/0089.
- The anchor system of the UP LIFT support to the reinforced concrete kerb is the responsibility of the structural designer of the work. Ø12 rods can be fitted in the side holes of the UP LIFT support to improve the anchoring system to the kerb.

MOUNTING

UP LIFT supports make it possible to construct timber buildings in which the walls are installed on a reinforced concrete kerb in order to ensure the necessary durability. Usually, reinforced concrete kerbs are constructed with a geometric tolerance that is incompatible with the precision of timber walls, resulting in problems on site due to the lack of alignment between the wall and the kerb edge.
UP LIFT allows **the reinforced concrete kerb** to be **built after the timber walls have been installed**, so that these inconveniences are eliminated. The builder of the timber building must place the UP LIFT supports on the reinforced concrete foundation and lay the walls on top of the supports. Following the assembly of the timber structures, the kerb can be constructed, which acts as a transfer element for the compressive stresses from the walls.

The construction sequence is shown schematically.

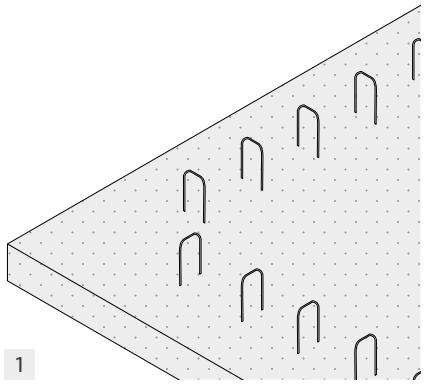

Prepare the reinforced concrete base with the reinforcement brackets for future connection to the reinforced concrete kerb.

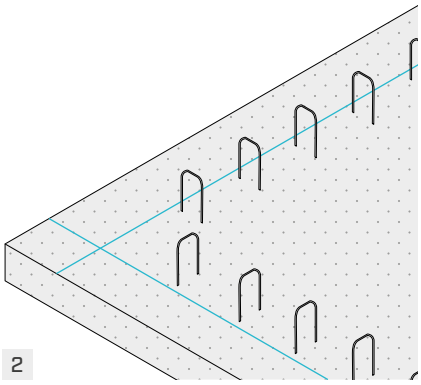

On the surface of the foundation, trace the line of the timber walls using a powder marker.
The wall flush can be either internal or external depending on the choice of the direction in which the supports are to be installed (external or internal plate). Along the length of the walls trace the position of the UP LIFT supports (suggested accuracy ± 5 cm | ± 2").

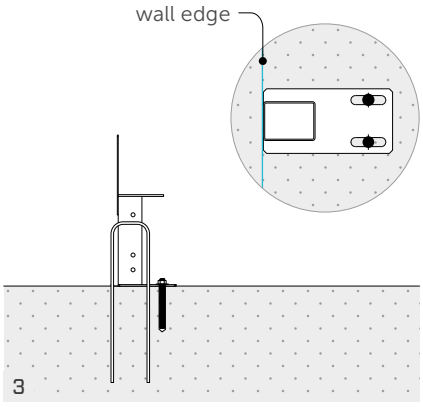

Position the UP LIFT supports and align the base plate with the outer edge of the timber wall. Fasten the supports with SKR screw-in anchors positioned in the centre of the slotted holes.

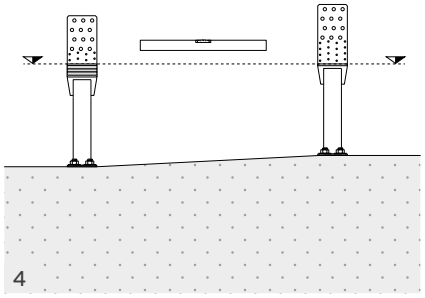

Use a spirit level to locate the support with the highest elevation. This will be the reference point for installing the walls. Place SHIM shims on the other UP LIFT supports to bring them to the same height as the reference point.

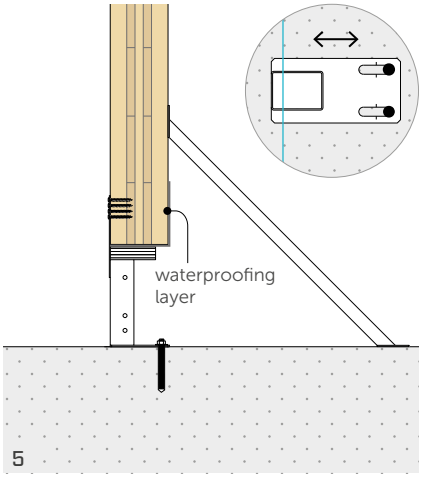

Place the timber walls on the supports and fasten them with HBS PLATE or LBS screws. Slots on the base plate allow for possible adjustment of the position of the supports in the event of tracking errors (± 20 mm). If necessary, the GIR451000 supports can be inserted to stabilise the base of the walls for out-of-plane movements.

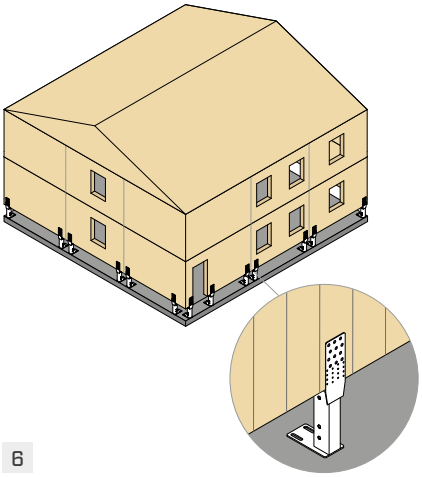

Complete the construction of the timber building making sure to leave the GIR451000 supports in place at the base of the walls. GIR3000 or GIR4000 supports can be used to stabilise the top of the walls while waiting for the first floor to be installed. The number of UP LIFT supports must take into account the loads resulting from the building's self-weight up to the construction of the kerb.

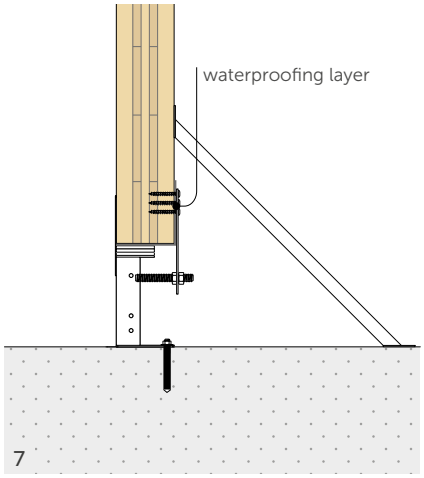

Complete the installation of the ground fastenings (see ALTERNATIVE FASTENING section).

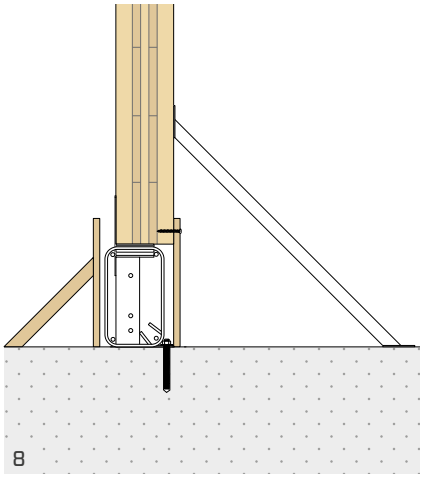

Position the formwork for casting the kerb. On one side the formwork can be directly screwed to the wall, while on the other side it must be spaced to allow the concrete to be poured.

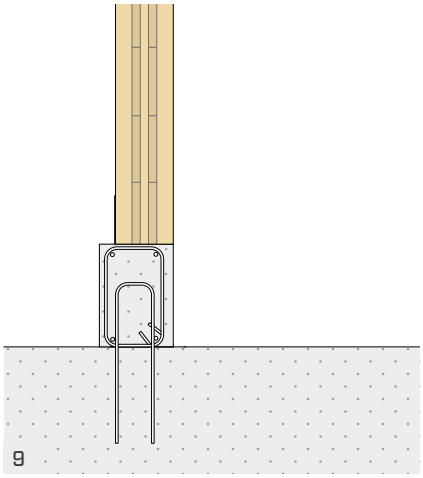

Complete the casting of the kerb. When cured, remove the GIR451000 formwork and supports.

The preparation of the reinforcement rods for the reinforced concrete kerb can be carried out in several steps depending on requirements. It is recommended to perform it after step 3 (after installing the UP LIFT supports) or after step 7 (after installing the walls). In any case, it is possible to use the holes provided on the UP LIFT support to insert 12 mm diameter rods in order to improve the supports anchor system to the reinforced concrete kerb.

STRUCTURAL VALUES | $F_{1,c}$ | $F_{1,t}$ | $F_{2/3}$

configuration	fasteners type	fasteners Ø x L [mm]	n_V [pcs]	$R_{1t,k\ timber}$ [kN]	$R_{2/3,k\ timber}$ [kN]	$R_{1c,k\ steel}$ [kN]	γ_{steel}
pattern 1	HBS PLATE	Ø8 x 100	12	**57,2**	**-**(2)	**110,0**	γ_{M0}
pattern 2	LBA	Ø4 x 60	4	**-**	**9,3**(1)		
	LBS	Ø5 x 50		**-**	**4,2**(1)		
pattern 3	LBA	Ø4 x 60	8	**-**	**7,8**(1)		
	LBS	Ø5 x 50		**-**	**6,6**1)		
pattern 4	LBA	Ø4 x 60	8	**-**	**5,8**(1)		
	LBS	Ø5 x 50		**-**	**4,9**(1)		

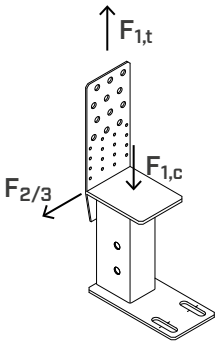

The timber-side compressive strength must be verified by the designer.
(1) Strength values are derived by similarity with the NINO100100 angle bracket in accordance with ETA-22/0089.
(2) For the $R_{2/3}$ shear strength value, refer to the product data sheet available at www.rothoblaas.com.

GENERAL PRINCIPLES

- A timber density of ρ_k = 350 kg/m^3 was considered for the calculation process. The tensile $R_{1t,\ k\ timber}$ and shear $R_{2/3,\ k\ timber}$ strengths refer to the failure of the timber-side connection. The steel-side strength is considered to be satisfied.
- The design values for tensile stress $F_{1,t}$ or shear stress $F_{2/3}$ are derived from the values in the table as follows:

$$R_d = \frac{R_{k,\ timber} \cdot k_{mod}}{\gamma_M}$$

- The coefficients k_{mod} and γ_M should be taken according to the current regulations used for the calculation.
- The compressive strength can be verified considering the actual loads acting during installation. In addition to the $R_{1c,k\ steel}$ verification, the designer must carry out the verification on the timber side. UP LIFT supports are intended as temporary supports for transferring compressive forces waiting for the casting of the reinforced concrete kerb.
- The verification of tensile or shear stresses transfer from the UP LIFT support to the reinforced concrete kerb is the responsibility of the structural designer of the work. Ø12 rods can be placed in the UP LIFT support to ensure anchorage to the reinforced concrete kerb.
- The design of the number and position of the UP LIFT supports must take into account the presence of openings in the wall and, for TIMBER FRAME walls, the position of the studs.

ALTERNATIVE FASTENING

UP LIFT supports can be used as structural elements to resist tensile or shear stress. In addition, many other connection systems in the Rothoblaas range can be used. A few examples are given.

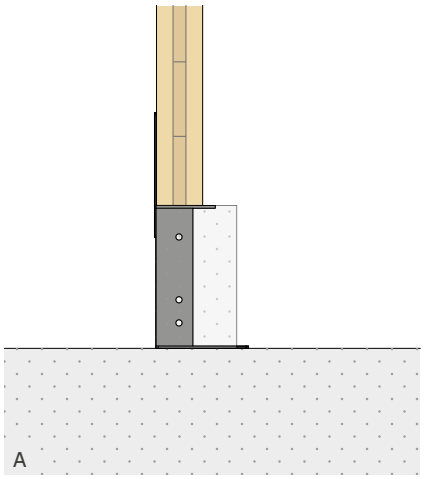

UP LIFT

UP LIFT supports can be used as a ground fastening system. The strength verification on the concrete side must be carried out by the designer. Inside the UP LIFT support there are holes for the insertion of Ø12 rods useful for anchoring to the concrete kerb.

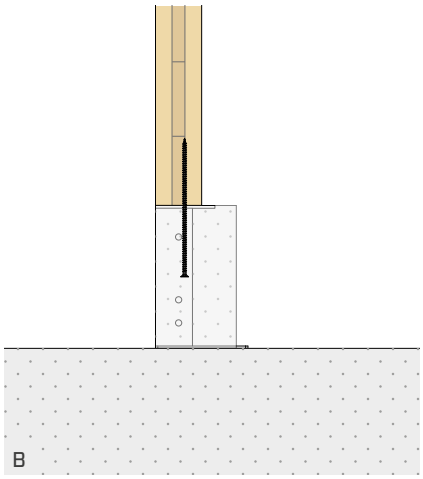

TC FUSION WITH BOTTOM INSERTION

VGS screws or RTR rods act as a connection to the concrete kerb. In this case, screws must be prepared before the walls are installed.

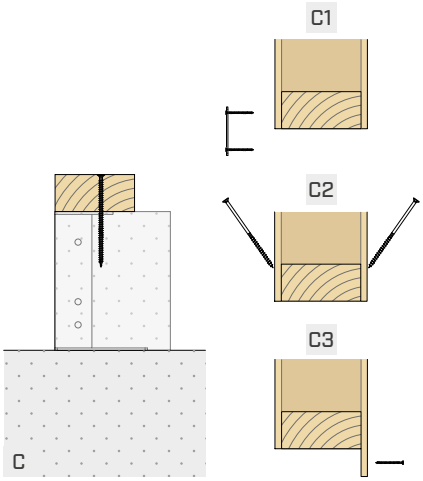

TC FUSION WITH BASE PLATE

A timber base plate can be installed directly on UP LIFT supports. After installing the beam, the VGS screws are inserted from top to bottom. The wall is then installed and fastened to the base plate using, for example, TITAN PLATE T plates (C1), inclined HBS screws (C2) or by directly nailing the OSB panels (C3).

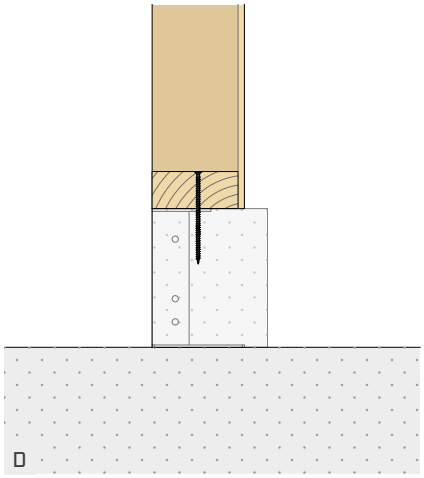

TC FUSION WITH TOP INSERTION

For open TIMBER FRAME walls, the VGS screws can be installed from top to bottom once the wall has been installed.

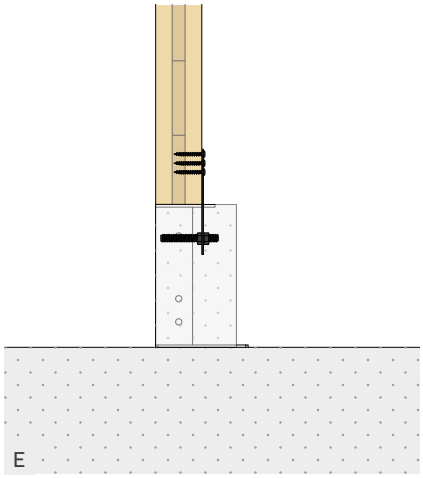

TITAN PLATE C

The transfer of $F_{2/3}$ shear stresses is possible by means of TITAN PLATE C plates installed on the wall prior to the kerb construction. Instead of reinforced concrete anchors, it is possible to pre-install bolts or threaded rods with nut and lock nut. The calculation of the concrete-side connection must be carried out by the designer.

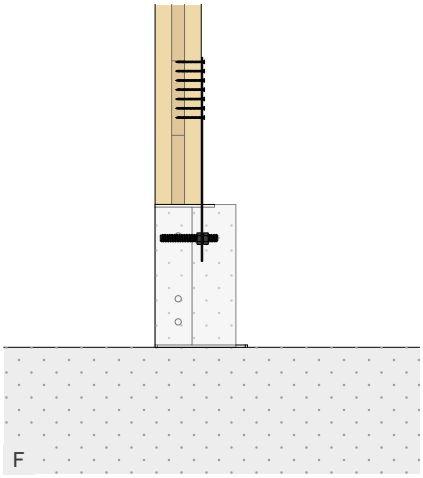

WHT PLATE C

The transfer of F_1 tensile stresses is possible by means of WHT PLATE C plates installed on the wall prior to the kerb construction. Instead of reinforced concrete anchors, it is possible to pre-install bolts or threaded rods with nut and lock nut. The calculation of the concrete-side connection must be carried out by the designer.

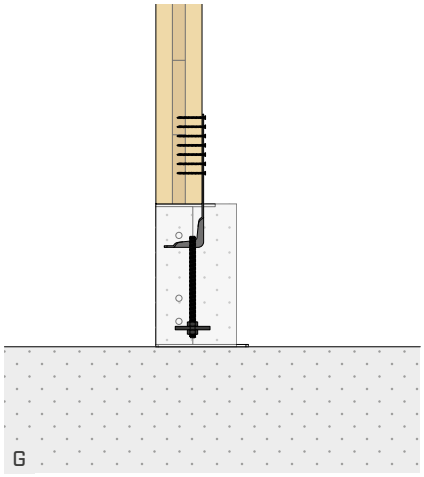

WKR

The transfer of F_1 tensile forces is possible using WKR hold-downs with the bracket turned towards the wall.

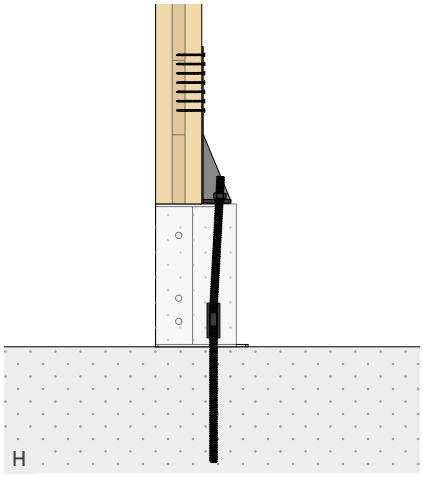

WHT

The transfer of F_1 tensile forces is possible using WHT hold-downs. In this case, it is possible to anchor the angle bracket directly to the concrete support, bypassing the kerb.

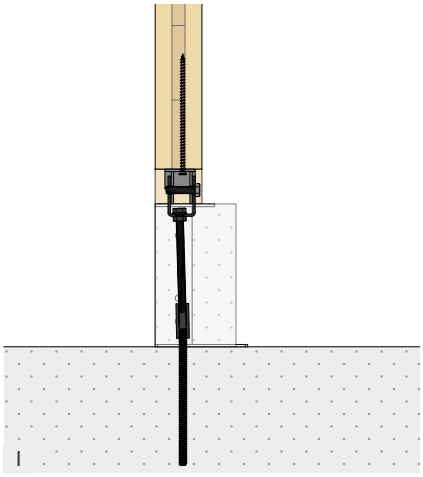

RADIAL / RING

The transfer of F_1 tensile forces is possible using the RADIAL or RING connectors pre-installed in the wall. In this case, it is possible to anchor the angle bracket directly to the concrete support, bypassing the kerb.

The table gives an overview of the application possibilities for the various fastening solutions on CLT and TIMBER FRAME.

configuration		CLT		TIMBER FRAME	
		$F_{1,t}$	$F_{2/3}$	$F_{1,t}$	$F_{2/3}$
A	**UP LIFT**	●	●	-	●
B	**TC FUSION with bottom insertion**	●	●	●	●
C	**TC FUSION with base plate**	-	●	-	●
D	**TC FUSION with top insertion**	-	-	-	●
E	**TITAN PLATE C**	-	●	-	●
F	**WHT PLATE C**	●	-	●	-
G	**WKR**	●	-	●	-
H	**WHT**	●	-	●	-
I	**RADIAL / RING**	●	-	-	-

REQUIREMENTS FOR THE EXECUTION OF CONCRETE CASTING

Concrete can be cast using the portion of the kerb free of wall (diagram 1). In this case, it is recommended that the kerb is of adequate width. Alternatively, openings can be made in the wall as shown in Diagram 2.

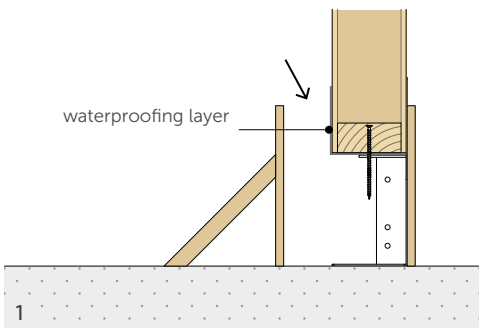

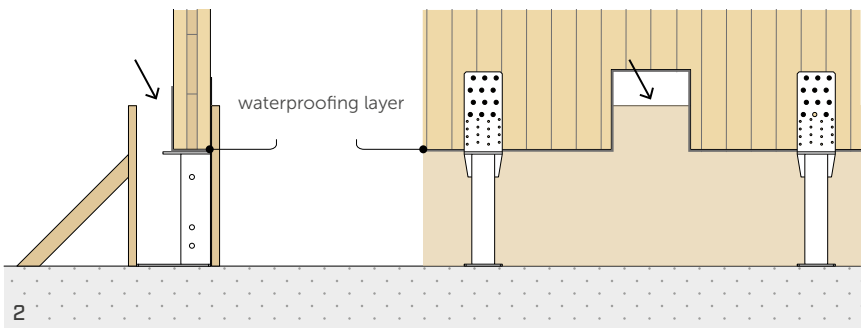

RADIAL

REMOVABLE CONNECTOR FOR BEAMS AND PANELS

VIDEO CALCULATION TOOL DESIGN REGISTERED ETA-24/0062

PREFABRICATION AND DISASSEMBLY

By pre-installing the connectors at the factory, fastening on site is reduced to a few simple steel bolts for maximum installation reliability. Disassembling the connection is quick and easy.

TOLERANCE

By using RADIALKIT components, it is possible to have a tensile connection with exceptional installation tolerance. The connection remains concealed in the wall thickness.

BEAMS, WALLS AND COLUMNS

Ideal for making connections for either walls, beams and columns (gerber saddles, hinge joints, etc.). Ideal for hybrid timber-to-steel structures.

MODULAR BUILDINGS

The concealed connection is ideal for prefabricated buildings with volumetric modules.

USA, Canada and more design values available online.

SERVICE CLASS SC1 SC2

MATERIAL

S355 Fe/Zn12c S355 + Fe/Zn12c carbon steel

EXTERNAL LOADS

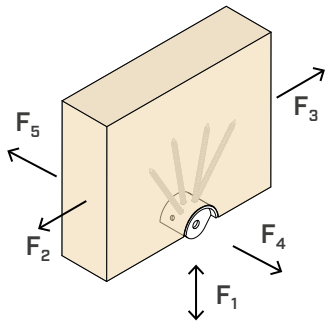

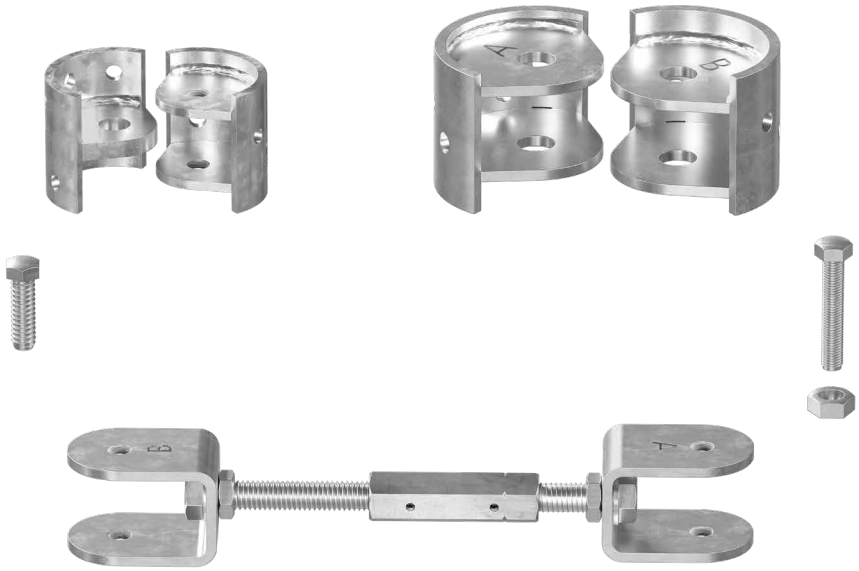



FIELDS OF USE

Connections between CLT or LVL panels resistant in all directions.
Hinge connections between glulam beams.
Highly prefabricated and demountable construction systems.

Can be applied to:

- CLT or LVL walls and floors
- solid timber, glulam or LVL beams or columns



RADIALKIT

It makes it possible to create tensile connections for walls, without the need to fix screws on site. The connection is completed by inserting the bolts from inside the building without the need for external scaffolding.

BRACINGS

The RADIAL60S connector is ideal for fastening steel bracing to timber beams or columns.

CODES AND DIMENSIONS

RADIAL

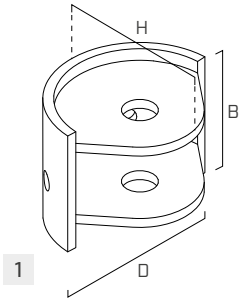

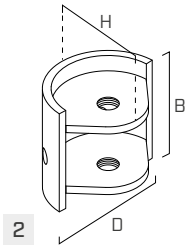

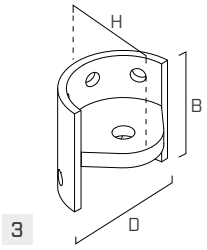

	CODE	D [mm]	B [mm]	H [mm]	*D [in]*	*B [in]*	*H [in]*	pcs
1	**RADIAL90**	90	65	74	*3 1/2*	*2 9/16*	*2 15/16*	10
2	**RADIAL60D**	60	55	49	*2 3/8*	*2 3/16*	*1 15/16*	10
3	**RADIAL60S**	60	55	49	*2 3/8*	*2 3/16*	*1 15/16*	10

RADIALKIT FOR SPACED FASTENING

CODE	D [mm]	B [mm]	s [mm]	*D [in]*	*B [in]*	*s [in]*	pcs
RADIALKIT90	60	60	6	*2 3/8*	*2 3/8*	*1/4*	5
RADIALKIT60	40	51	5	*1 9/16*	*2*	*3/16*	5

The standard bolt connecting the two forks must be ordered separately.

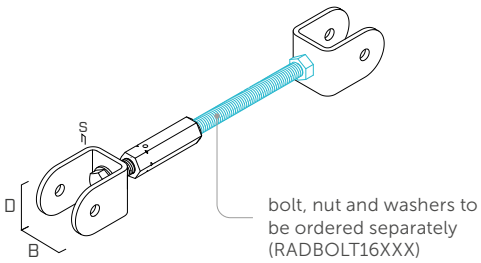

FASTENERS

Full thread BOLT - hexagonal head steel 8.8 EN 15048

CODE	d [mm]	L [mm]	SW [mm]	*d [in]*	*L [in]*	*SW [in]*	pcs
RADBOLT1245 (*)	M12	45	19	*1/2*	*1 3/4*	*3/4*	100
RADBOLT1260	M12	60	24	*1/2*	*2 3/8*	*15/16*	50
RADBOLT1670	M16	70	24	*5/8*	*2 3/4*	*15/16*	25
RADBOLT16140	M16	140	24	*5/8*	*5 1/2*	*15/16*	25
RADBOLT16160	M16	160	24	*5/8*	*6 1/4*	*15/16*	25
RADBOLT16180	M16	180	24	*5/8*	*7 1/8*	*15/16*	25
RADBOLT16200	M16	200	24	*5/8*	*8*	*15/16*	25
RADBOLT16220	M16	220	24	*5/8*	*8 5/8*	*15/16*	25
RADBOLT16240	M16	240	24	*5/8*	*9 1/2*	*15/16*	25
RADBOLT16300	M16	300	24	*5/8*	*11 3/4*	*15/16*	25

(*)Steel 10.9 EN ISO 4017.

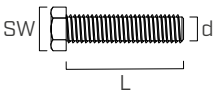

type	description		d [mm]	support	page
LBS HARDWOOD EVO	C4 EVO round head screw on hardwoods		7		572
VGS	fully threaded countersunk screw		9		575
ULS125	washer		M12-M16	-	176
MUT 934	hexagonal nut		M12-M16	-	178

COMPONENT COUPLINGS TABLE

	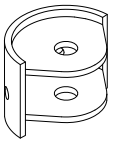 RADIAL90	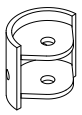 RADIAL60D	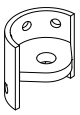 RADIAL60S	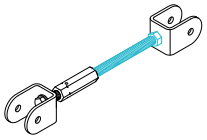 RADIALKIT90(*)	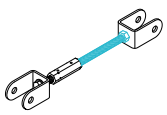 RADIALKIT60(*)
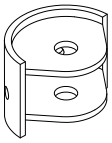 RADIAL90	1x  RADBOLT1670 (10.9)	-	-	2x  RADBOLT1670 (8.8) 1x  RADBOLT16XXX	-
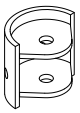 RADIAL60D	-	-	1x  RADBOLT1245 (10.9)	-	2x  RADBOLT1260 (8.8) 1x  RADBOLT16XXX
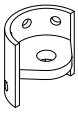 RADIAL60S	-	1x  RADBOLT1245 (10.9)	1x  RADBOLT1245 (10.9)	-	-

(*)XXX represents the thickness of the interposed layer (e.g. floor thickness).

GEOMETRY

RADIAL90

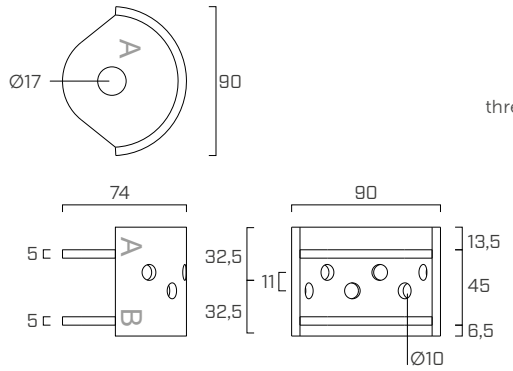

RADIAL60D

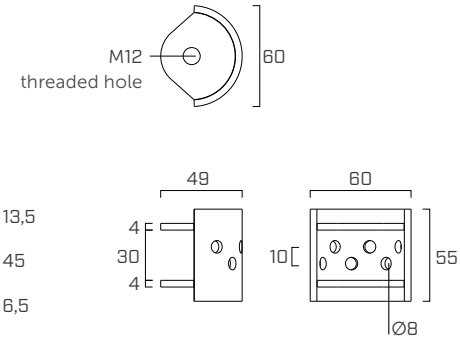

RADIAL60S

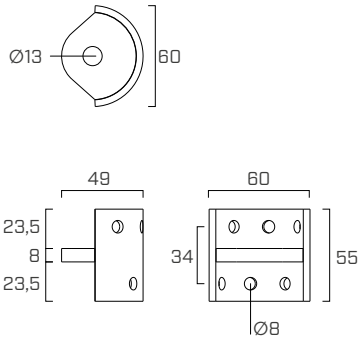

RADIALKIT90

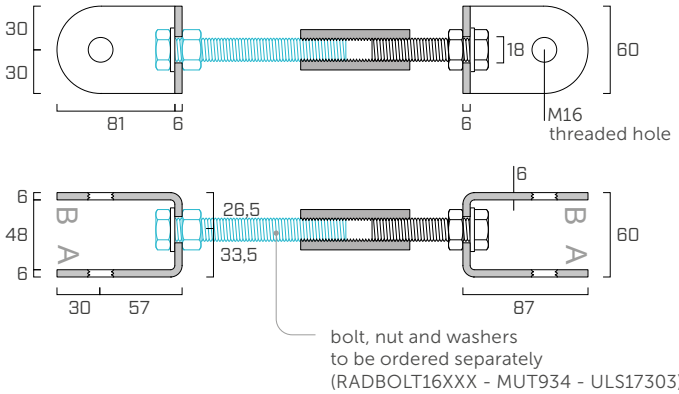

RADIALKIT60

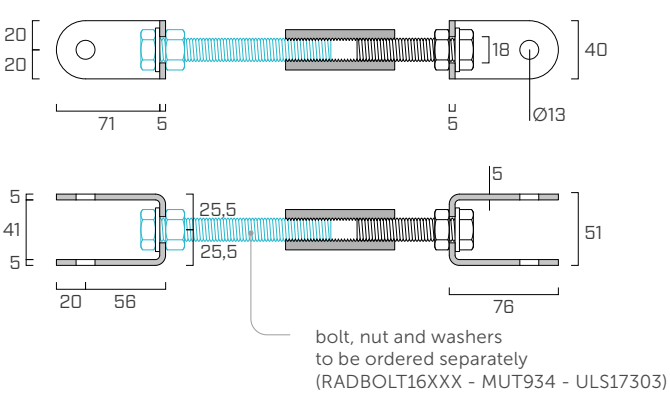

The connecting bolt must be ordered separately.
The length corresponds to the layer of timber interposed, for example:

- in the case of a 160 mm thick CLT floor, the RADBOLT bolt length will be 160 mm (panel thickness);
- in the case of an CLT floor and XYLOFON profiles 160+6+6 mm thick, the length of the RADBOLT bolt will be 160 mm (panel thickness) by reducing the part of the thread inserted in the central tensioner;
- maximum adjustable range +12/-8 mm with bolt length in standard configuration. The correct pull-through of the bolts through the inspection holes on the tensioner must always be verified.

INSTALLATION

FASTENERS

type	screws	number of screws [pcs]
RADIAL90	VGS Ø9	4-6
RADIAL60D	LBSHEVO Ø7	4-6
RADIAL60S	LBSHEVO Ø7	4-6

MINIMUM DISTANCE FROM THE END [1]

type	screws	l [mm]	$a_{4,min}$ [mm] 4 screws	$a_{4,min}$ [mm] 6 screws
RADIAL90	VGS Ø9	200	155	215
		220	160	230
		240	175	245
		260	185	265
		280	195	285
		300	205	300
		320	220	320
		340	230	335
		380	255	370
RADIAL60D **RADIAL60S**	LBSHEVO Ø7	120	110	135
		160	120	170
		200	145	205

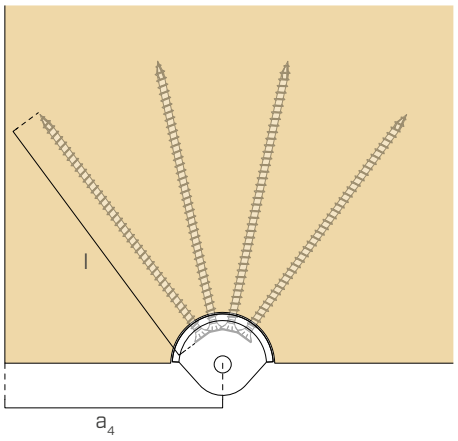

MINIMUM DISTANCE FROM THE EDGE [1] - SINGLE CONNECTORS

type	screws	B [mm]	$t_{CLT,min}$ [mm]	c_{min} [mm]
RADIAL90	VGS Ø9	65	80	0
RADIAL60D	LBSHEVO Ø7	55	60	0
RADIAL60S	LBSHEVO Ø7	55	80	10

MINIMUM DISTANCE FROM THE EDGE [1] - COUPLED CONNECTORS

type	screws	B [mm]	$t_{CLT,min}$ [mm]	c_1 [mm]	c_{min} [mm]
2x RADIAL90	VGS Ø9	65	160	15	0
3x RADIAL90	VGS Ø9	65	240	15	0

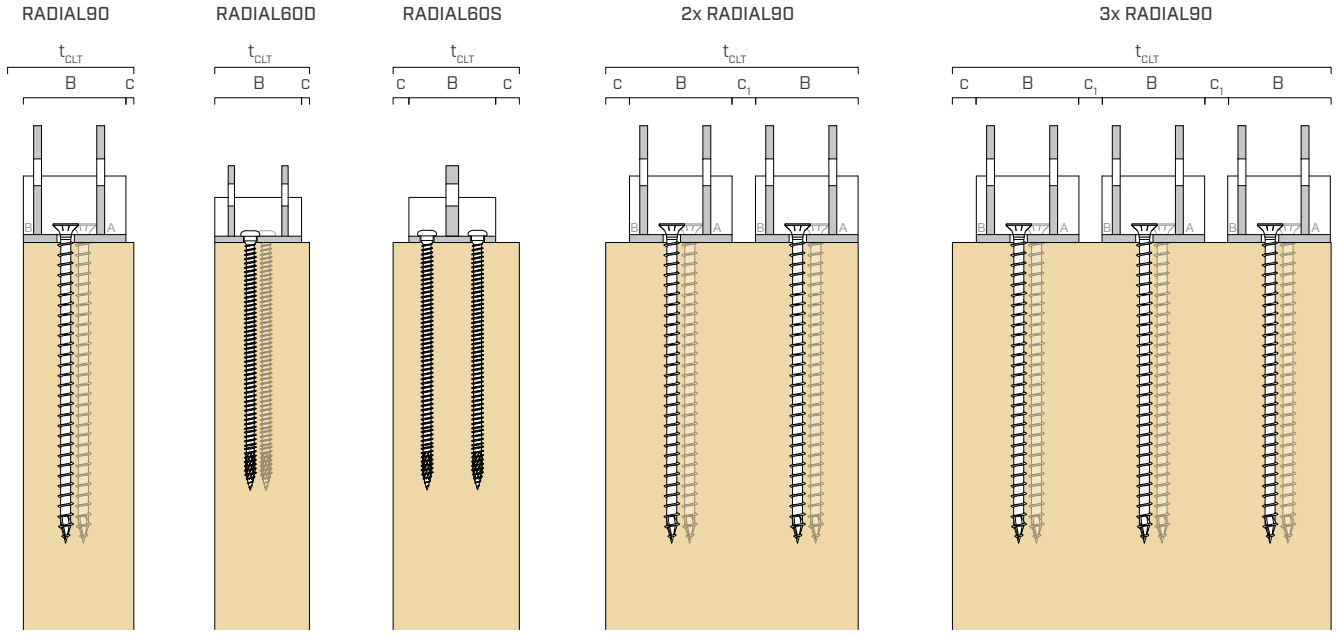

NOTES

(1) Minimum dimensions refer to application on CLT panels. The distances of the fasteners to the ends and edges must be observed for application on glulam beams. The actions of transverse forces orthogonal to the grain that may introduce splitting phenomena must also be checked.

ROUTING IN TIMBER ELEMENTS[1]

DIRECT FASTENING

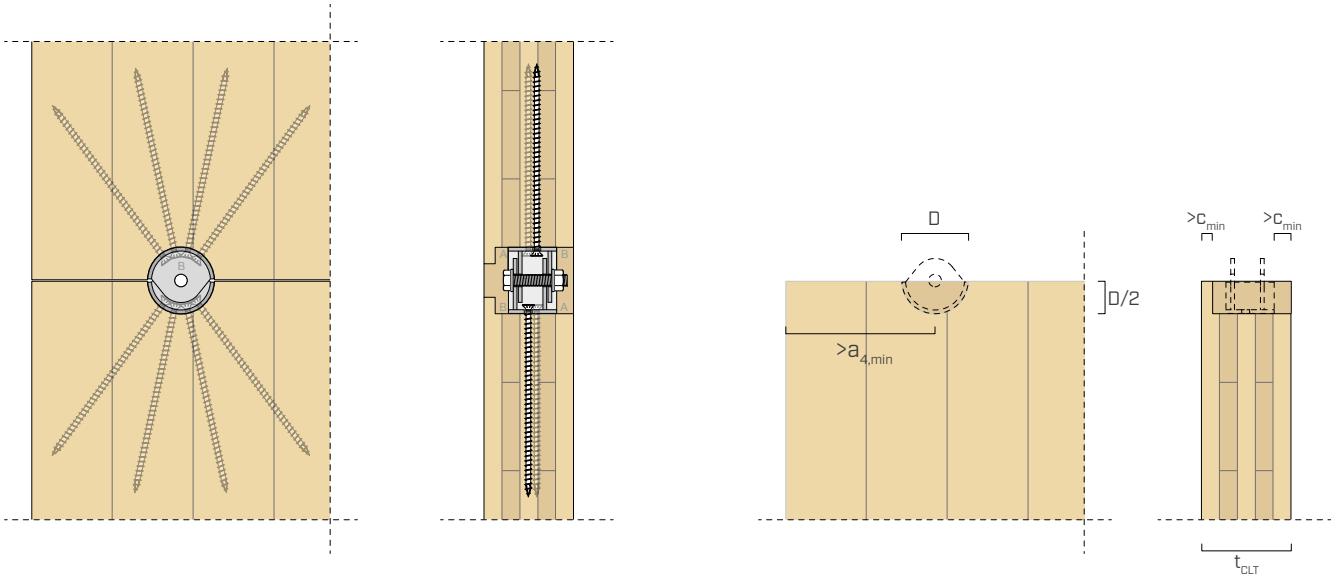

SPACED FASTENING

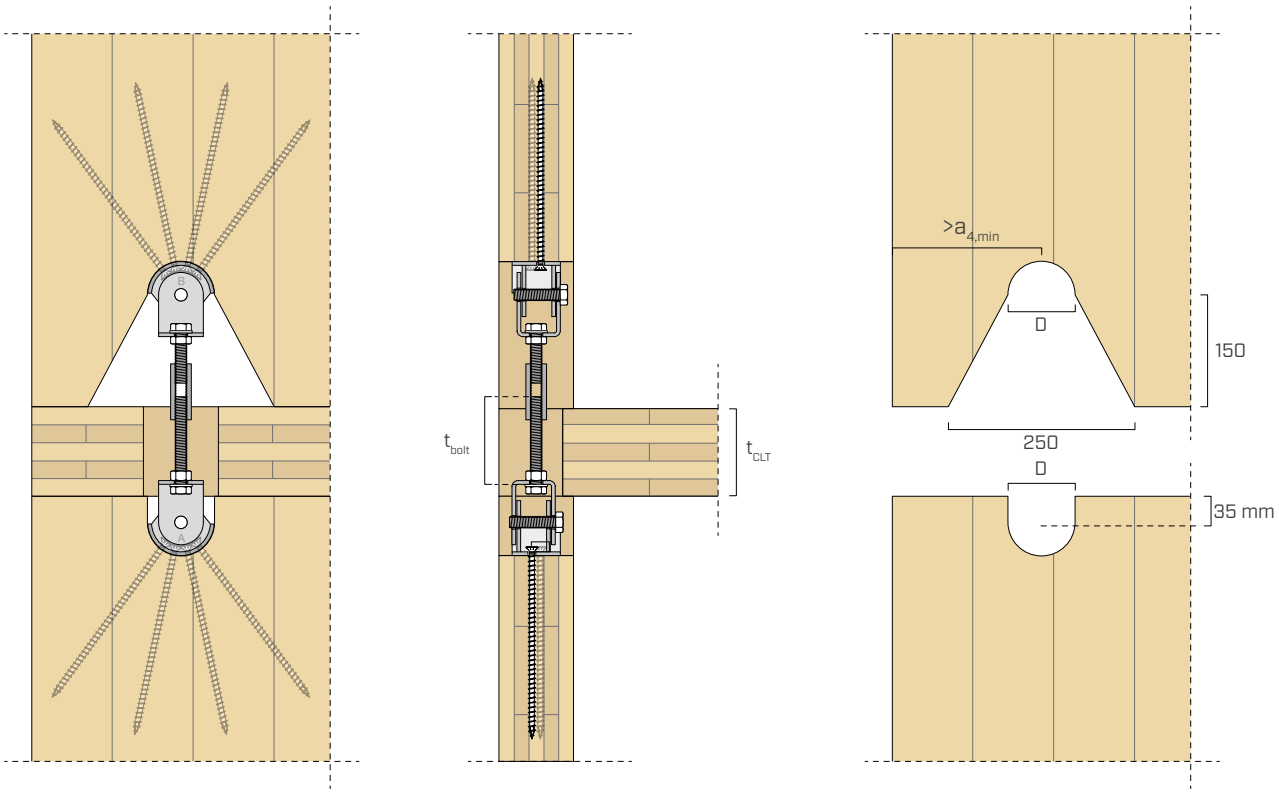

NOTES

(1) The processing geometries shown in the images represent possible geometries for the most common applications. In the case of inter-storey spacing fastening, the geometry allows the tensioner to be adjusted from inside the building. Depending on the specific requirements, the processing can be modified while respecting the minimum distances indicated in the relevant section.

By adopting this geometry, the length of the RADBOLT16XXX bolt corresponds to the thickness of the interposed CLT floor, the same rule also applies in the case of resilient profiles positioned between the floor and walls (with a maximum thickness of 6mm per single interposed profile). If different geometries are used, the assumptions and choice of bolt length must be checked and adjusted.

ELEMENTS COUPLING

The connectors of the RADIAL family can be coupled according to two main schemes: **direct** or **spaced**.
The first involves the direct fastening of two connectors (RADIAL90+RADIAL90 or RADIAL60S+RADIAL60D) by means of a bolt. Depending on the model, the holes in the flanges can be either threaded or smooth so as to allow coupling with the necessary tolerances.
The spaced fastening, which can be used, for example, in the case of assembly with the interposition of a floor, requires the use of a KIT that includes not only the metal forks but also the adjustment system. This does not include the completion bolt, which can be ordered separately depending on the thickness of the interposed layer.

RADIAL90

direct fastening

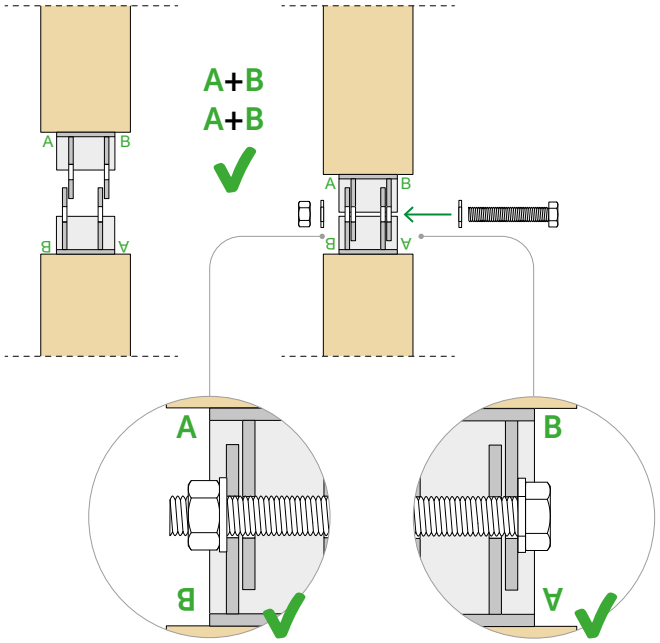

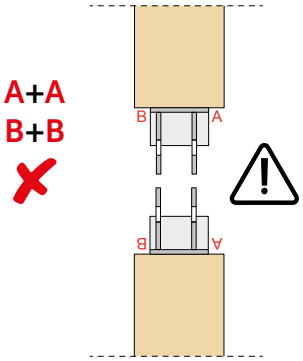

The RADIAL 90 connector features an asymmetrical geometry to ensure a high-performance coupling in terms of stiffness and strength.
For this reason, special attention must be paid to the orientation of the connector during installation. The letters identifying the outer faces of the RADIAL connectors must be different (e.g. **A** and **B**).

RADIAL90+ RADIALKIT90

In the case of spaced fastening, rotating the fork plate ensures correct positioning even if the connector was positioned in the opposite direction.

spaced fastening

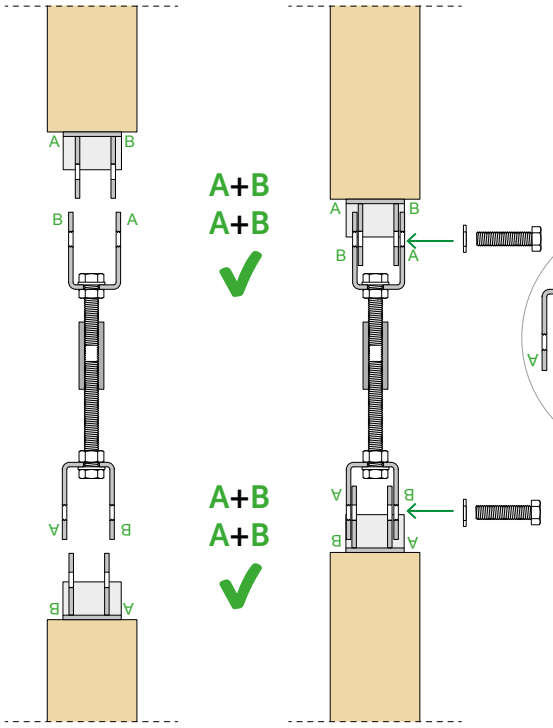

spaced fastening

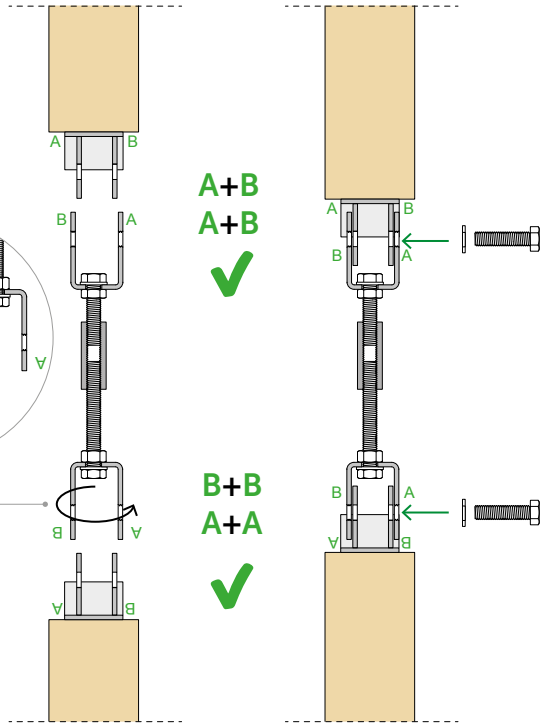

RADIAL60D + RADIAL60S

direct fastening

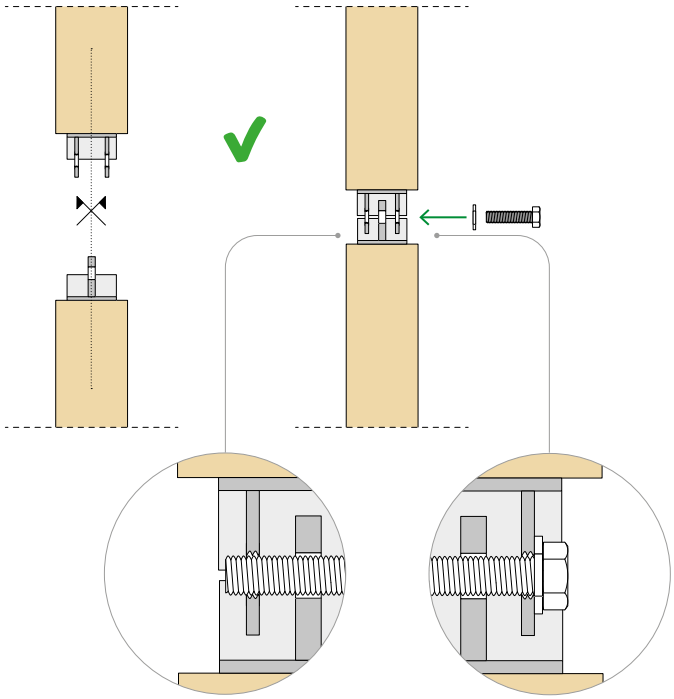

RADIAL60D+ RADIALKIT60

spaced fastening

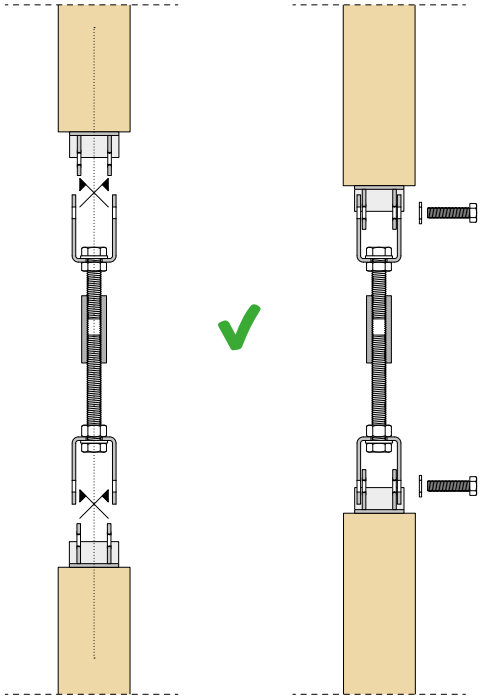

TOLERANCES

RADIAL connectors are designed to suit both prefabrication off-site and placement on site. Tolerances along the transverse direction and rotation around the centre of the connector are guaranteed.
In the case of the spaced connection, the construction tolerance is further increased by the presence of a distance adjustment system that allows a considerable inclination of the rod.

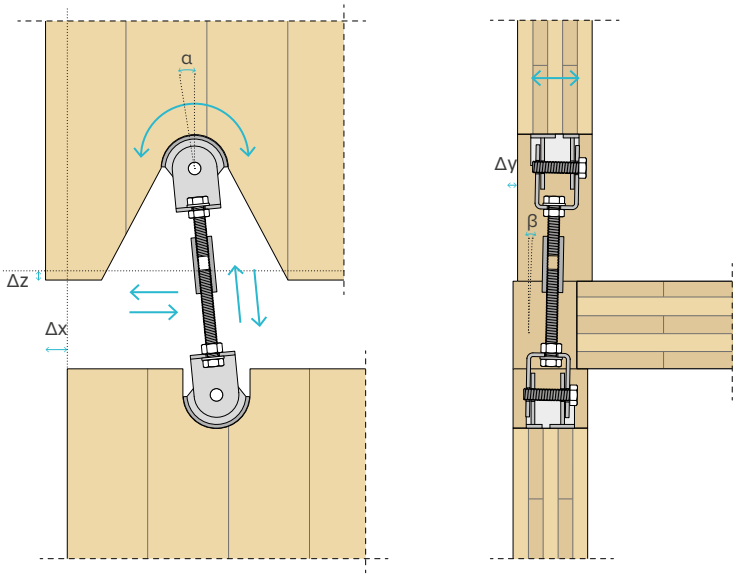

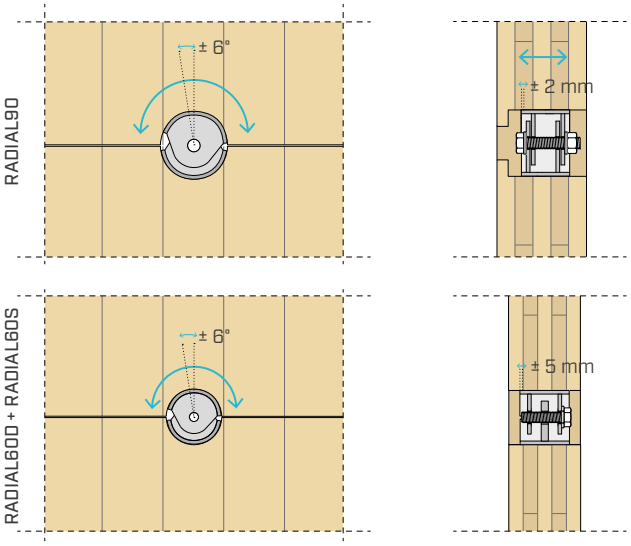

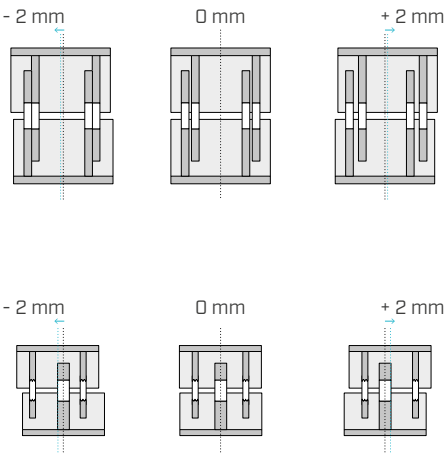

STRUCTURAL VALUES | F_1

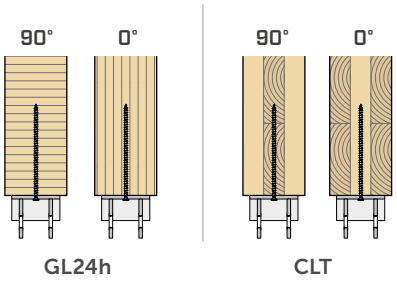

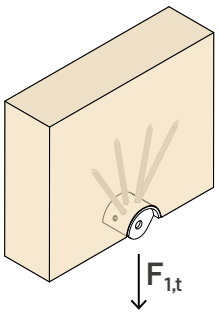

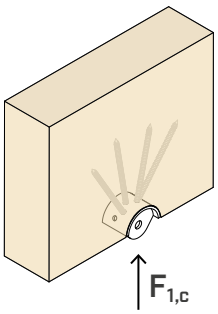

TENSILE JOINT - RADIAL

		TIMBER[1]				STEEL	
type	fastening	$R_{1,t\ k\ timber}$ GL24h		$R_{1,t\ k\ timber}$ CLT		$R_{1,k\ steel}$	γ_{steel}
		0°	90°	0°	90°		
	[pcs Ø x L]	[kN]	[kN]	[kN]	[kN]	[kN]	
RADIAL90	4 - VGS Ø9x260	65,3	85,8	60,5	85,8	113,5	γ_{M2}
	6 - VGS Ø9x320	95,9	109,9	93,4	109,9		
RADIAL60D	4 - LBSHEVO Ø7x200	38,3	58,4	35,5	54,2	60,0	
	6 - LBSHEVO Ø7x200	54,7	71,0	50,7	65,8		
RADIAL60S	4 - LBSHEVO Ø7x200	38,3	58,4	35,5	54,2	51,0	
	6 - LBSHEVO Ø7x200	54,7	71,0	50,7	65,8		

TENSILE JOINT - RADIALKIT

When using RADIAL with RADIALKIT the coupling must be verified according to the following table.

	STEEL	
type	$R_{1,k\ steel}$ [kN]	γ_{steel}
RADIALKIT90	85,6	γ_{M0}
RADIALKIT60	54,8	

COMPRESSION JOINT - RADIAL

	TIMBER[1]			STEEL	
type	$R_{1,c\ timber}$ GL24h		$R_{1,c\ timber}$ CLT	$R_{1,k\ steel}$	γ_{steel}
	0°	90°			
	[kN]	[kN]	[kN]	[kN]	
RADIAL90	112,6	56,3	81,9	113,5	γ_{M2}
RADIAL60D	63,8	31,9	46,4	60,0	
RADIAL60S	63,8	31,9	46,4	51,0	

NOTES

(1) For CLT panels the strength is calculated for a characteristic density ρ_k=350kg/m^3, in the case of glulam (GL) they refer to a density of ρ_k= 385kg/m^3.

STRUCTURAL VALUES | $F_{2/3}$[2]

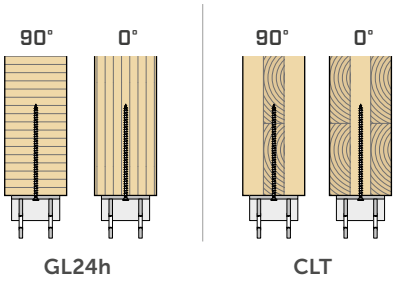

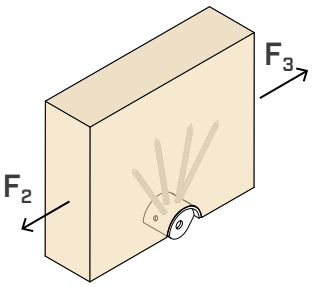

SHEAR JOINT - RADIAL

type	fastening	TIMBER[1] [2] $R_{2/3,k\ timber}$ GL24h 0° [kN]	GL24h 90° [kN]	CLT 0° [kN]	CLT 90° [kN]
RADIAL90	4 - VGS Ø9x260	51,2	56,7	53,4	60,3
	6 - VGS Ø9x320	71,4	74,0	76,3	79,8
RADIAL60D	4 - LBSHEVO Ø7x200	29,7	32,2	30,9	35,6
	6 - LBSHEVO Ø7x200	39,5	44,7	43,5	43.2
RADIAL60S	4 - LBSHEVO Ø7x200	29,7	32,2	30,9	35,6
	6 - LBSHEVO Ø7x200	39,5	44,7	43,5	43.2

STRUCTURAL VALUES | BOLTS

In the configurations shown in the table, the class 10.9 bolt shear verification must be carried out.

coupling		fastening	STEEL $R_{k\ steel}$ [kN]	STEEL γ_{steel}
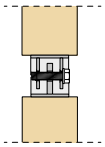	RADIAL60D + RADIAL60S	RADBOLT1245	38	γ_{M2}
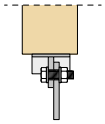	RADIAL60S + single plate[3]	RADBOLT1245	42,5	
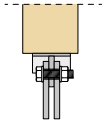	RADIAL60S + double plate[3]	RADBOLT1245	85,0	

NOTES

(1) For CLT panels the strength is calculated for a characteristic density ρ_k=350kg/m^3, in the case of glulam (GL) they refer to a density of ρ_k= 385kg/m^3.

(2) The steel-side failure mechanisms are over-resistance compared to the timber-side strength, so they are not shown in the table.

(3) Steel-side resistance refers to the case of connection with over-resistance plates. The geometry and strength of the connecting plates must be checked separately.

STRUCTURAL VALUES | TIMBER-TO-TIMBER | $F_{4/5}$ [2]

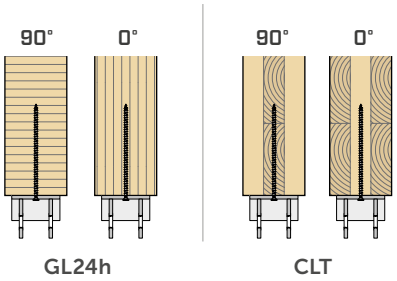

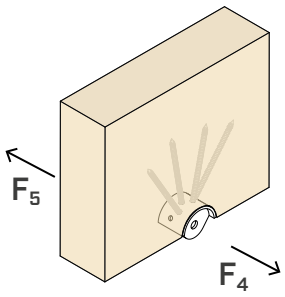

SHEAR JOINT - RADIAL

type	fastening	TIMBER[1] $R_{4/5,k\ timber}$ GL24h 0°	TIMBER[1] $R_{4/5,k\ timber}$ GL24h 90°	TIMBER[1] $R_{4/5,k\ timber}$ CLT 0°	TIMBER[1] $R_{4/5,k\ timber}$ CLT 90°
	[pcs Ø x L]	[kN]	[kN]	[kN]	[kN]
RADIAL90	4 - VGS Ø9x260	15,4	8,5	11,7	12,0
	6 - VGS Ø9x320	16,5	8,6	12,2	12,3
RADIAL60D	4 - LBSHEVO Ø7x200	12,4	7,0	9,5	9,8
	6 - LBSHEVO Ø7x200	13,5	7,2	10,0	10,2
RADIAL60S	4 - LBSHEVO Ø7x200	16,1	10,2	12,9	13,6
	6 - LBSHEVO Ø7x200	18,6	10,5	14,3	14,7

NOTES

(1) For CLT panels the strength is calculated for a characteristic density ρ_k=350kg/m^3, in the case of glulam (GL) they refer to a density of ρ_k= 385kg/m^3.

(2) The steel-side failure mechanisms are over-resistance compared to the timber-side strength, so they are not shown in the table.

GENERAL PRINCIPLES

- The design values are derived from the characteristic values determined in accordance with ETA-24/0062, ETA-11/0030 and EN 1995:2014 as follows.
- The design values are obtained as follows:

$$R_d = min \begin{cases} \frac{R_{k\ timber}\ or\ R_{k\ CLT} \cdot k_{mod}}{\gamma_M} \\ \frac{R_{k\ steel}}{\gamma_{M2}} \end{cases}$$

  The coefficients k_{mod}, γ_M and γ_{M2} should be taken according to the current regulations used for the calculation.
- The characteristic values of the load-bearing capacity $R_{k,timber}$ are determined by considering the strength formulations of the screws inserted in a layer with homogeneous timber grain direction. All screws connecting the RADIAL connector must be inserted in layers (even different ones) but with equal grain orientation.
- The strengths for lengths other than those indicated must be evaluated in accordance with ETA-24/0062, considering the effective pull-through depth of the threaded part, as:

  $l_{eff} = l$ -15 mm

- The minimum connector lengths are, 100 mm for 7 mm diameter screws and 180 for 9 mm diameter screws. The maximum density that can be used in verifications for timber or timber-based products is ρ_k=480kg/m^3.
- The calculation process used a timber characteristic density of ρ_k=385 kg/m^3 for glulam and ρ_k=350 kg/m^3 for CLT panels.
- For higher ρ_k values, the strength on timber side can be converted by the k_{dens} value:

$$k_{dens} = \left(\frac{\rho_k}{350}\right)^{0,8}$$

- The formulations for verifying connections with LVL are reported in ETA-24/0062.
- In the case of loads perpendicular to the plane of the panel, it is recommended to check there are no brittle failures before reaching the connection strength.
- K_{ser} values refer to the individual connector. In the case of series coupling, the stiffness must be halved.

INTELLECTUAL PROPERTY

- RADIAL is protected by the following Registered Community Designs: RCD 015032190-0011 | RCD 015032190-0012 | RCD 015032190-0013.

STRUCTURAL VALUES | STIFFNESS[1]

TENSILE JOINT | $K_{1,t\ ser}$

type	fastening	$K_{1,t\ ser}$ GL24h		$K_{1,t\ ser}$ CLT	
		0°	90°	0°	90°
	[pcs Ø x L]	[N/mm]	[N/mm]	[N/mm]	[N/mm]
RADIAL90	4 - VGS Ø9x260	24100	31700	22400	31700
	6 - VGS Ø9x320	35500	40700	34500	40700
RADIAL60D	4 - LBSHEVO Ø7x200	19100	29200	17700	27100
	6 - LBSHEVO Ø7x200	27300	30200	25300	30200
RADIAL60S	4 - LBSHEVO Ø7x200	19100	27500	17700	27100
	6 - LBSHEVO Ø7x200	27300	27500	25300	27500

COMPRESSION JOINT | $K_{1,c\ ser}$

type	$K_{1,c\ ser}$ GL24h		CLT
	0°	90°	-
	[N/mm]	[N/mm]	[N/mm]
RADIAL90	187600	93800	136500
RADIAL60D	100000	53100	77300
RADIAL60S	91600	53100	77300

SHEAR JOINTS | $K_{2/3\ ser}$

type	fastening	$K_{2/3\ ser}$ GL24h		$K_{2/3\ ser}$ CLT	
		0°	90°	0°	90°
	[pcs Ø x L]	[N/mm]	[N/mm]	[N/mm]	[N/mm]
RADIAL90	4 - VGS Ø9x260	18200	20200	19000	21500
	6 - VGS Ø9x320	25500	26400	27200	28500
RADIAL60D	4 - LBSHEVO Ø7x200	17800	16500	17100	19700
	6 - LBSHEVO Ø7x200	24800	21900	24100	24000
RADIAL60S	4 - LBSHEVO Ø7x200	17800	16500	17100	19700
	6 - LBSHEVO Ø7x200	24800	21900	24100	24000

NOTES

(1) For CLT panels the strength is calculated for a characteristic density $\rho_{k=}$350kg/m^3, in the case of glulam (GL) they refer to a density of ρ_k= 385kg/m^3.

RING

REMOVABLE CONNECTOR FOR STRUCTURAL PANELS

DOUBLE INCLINATION

Thanks to the double inclination of the screws, the connectors can be pre-installed in the factory or inserted on site. The installation of inclined screws is facilitated by the special geometry of the connector.

TIMBER-TO-TIMBER VERSION

The version with screws (RING60T) is ideal for connections between CLT panels as a floor-to-floor, floor-to-wall or wall-to-wall joint system. Installable on site, it allows positioning the panels according to any inclination and tolerances.

TIMBER-TO-STEEL VERSION

The bolted version (RING90C) is ideal for timber-to-steel connections in hybrid structures, or timber-to-timber connections using two connectors. No additional components required, simple bolting with M16.

EFFICIENT

The high strength of the connector makes it possible to reduce the number of fastenings. In the factory, simple processing of the panel is required, resulting in easy transport and installation, speeded up by operations performed only on one side of the wall.

USA, Canada and more design values available online.





VIDEO

CALCULATION TOOL

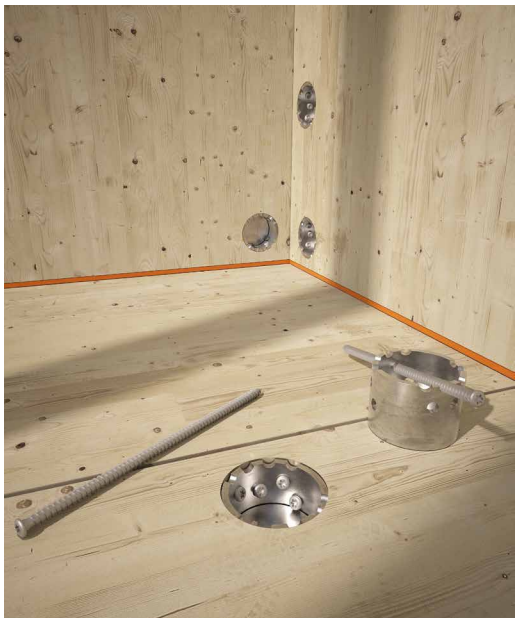

SERVICE CLASS	SC1 SC2
MATERIAL	
S355 Fe/Zn12c	S355 + Fe/Zn12c carbon steel
EXTERNAL LOADS	

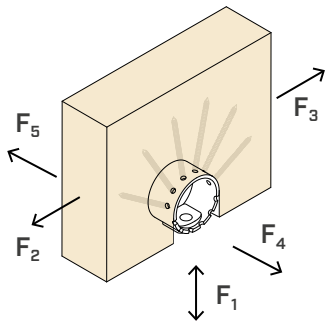

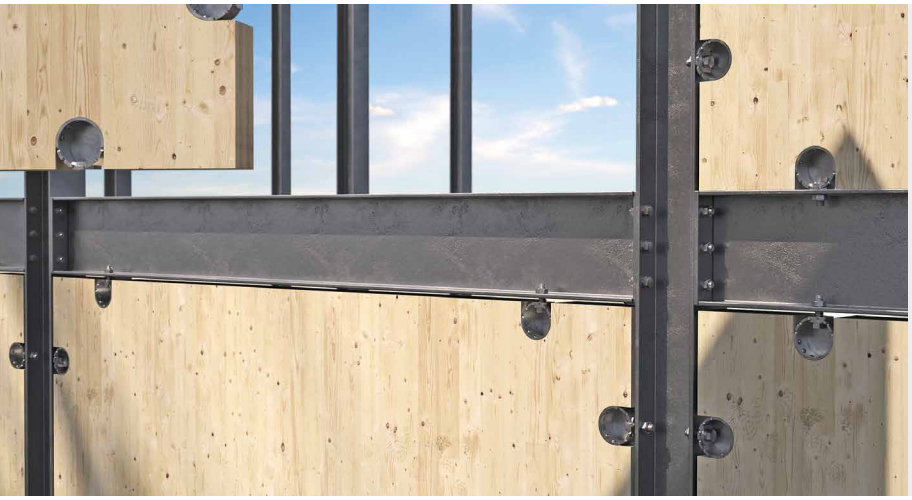

UNIVERSAL

The **RING60T** connector can be used for all connections between CLT panels such as wall-to-wall, wall-to-floor or floor-to-floor.

DISASSEMBLED

The **RING90C** model can be used for timber-to-steel connections in hybrid structures. Easy to disassemble thanks to the M16 bolt.

CODES AND DIMENSIONS

	CODE	D [mm]	B [mm]	*D [in]*	*B [in]*	n Ø8 *n Ø0.30* [pcs]	n Ø18 *n Ø0.71* [pcs]	pcs
1	**RING60T**	60	45	*2 3/8*	*1 3/4*	4+5	-	5
2	**RING90C**	90	50	*3 1/2*	*1 15/16*	6	1	5

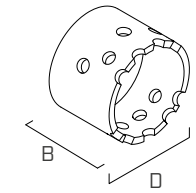

1

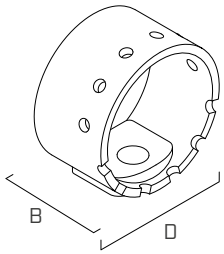

2

FASTENERS

type	description		d [mm]	support	page
LBS HARDWOOD EVO	C4 EVO round head screw on hardwoods	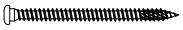	7		572
KOS	hexagonal head bolt		16		168

For further details please see the "TIMBER SCREWS AND DECK FASTENING" catalogue.

INSTALLATION

RING60T

routing geometry

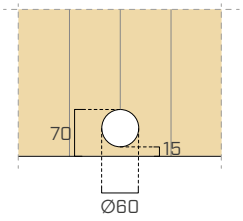

floor-to-floor | wall-to-wall

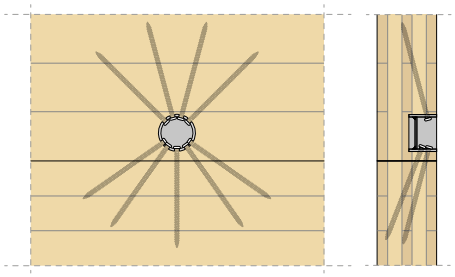

wall-floor

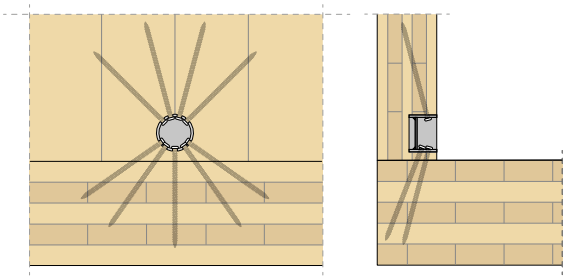

RING60T enables timber-to-timber connections to be made. The connector is fastened to the first timber component inside a simple circular hole 60 mm in diameter and 45 mm deep. It is fastened to the first timber component with 4 LBS HARDWOOD EVO Ø7 screws; the timber-to-timber connection is completed by inserting further 5 LBS HARDWOOD EVO Ø7 screws. It can be pre-installed in the factory or, in the case of a floor-to-ceiling or wall-to-wall connection, it can be installed after the panels have been installed, thanks to the double inclination of the screws.

RING90C

routing geometry

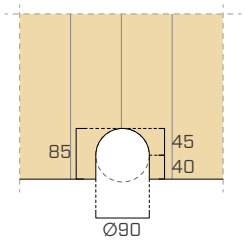

timber-to-steel

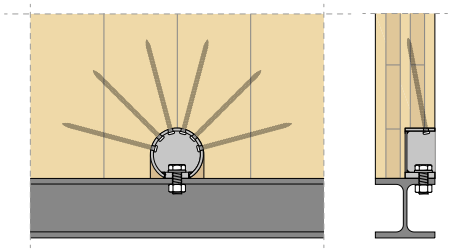

timber-to-timber

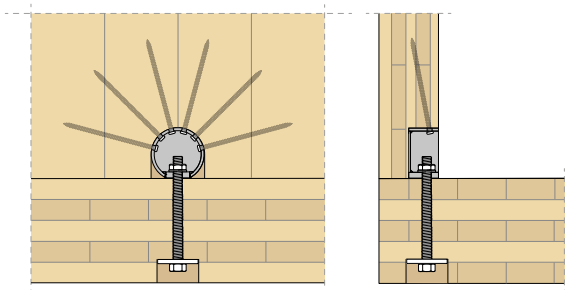

RING90C is fastened to the timber component with 6 LBS HARDWOOD EVO Ø7screws. It has a hole for inserting an M16 bolt, which can be fastened to other structural components made of steel, concrete or timber. The main application is within hybrid timber-to-steel structures but it is possible to make timber-to-timber connections using two opposing connectors or a timber bolt. The connector is easily disassembled by undoing the bolt.

X-RAD

X-RAD CONNECTION SYSTEM

VIDEO

MY PROJECT SOFTWARE

PATENTED

SERVICE CLASS SC1 SC2

EXTERNAL LOADS

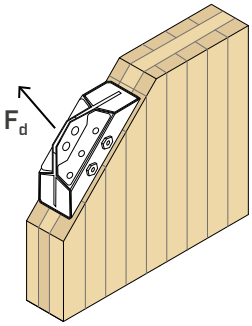

REVOLUTIONARY

A radical innovation in timber constructions, It redefines the standard for shear, resistance, transportation the assembling and resistance of CLT panels. X-RAD offers excellent static and seismic performance.

PATENTED

Handling and assembly of ultra-rapid CLT walls and floors. D rastic reduction of assembly time, construction site errors and risk of injury.

STRUCTURAL SAFETY

Ideal connection system for seismic design with tested and certified ductility values.

VIDEO

Scan the QR Code and watch the video on our YouTube channel

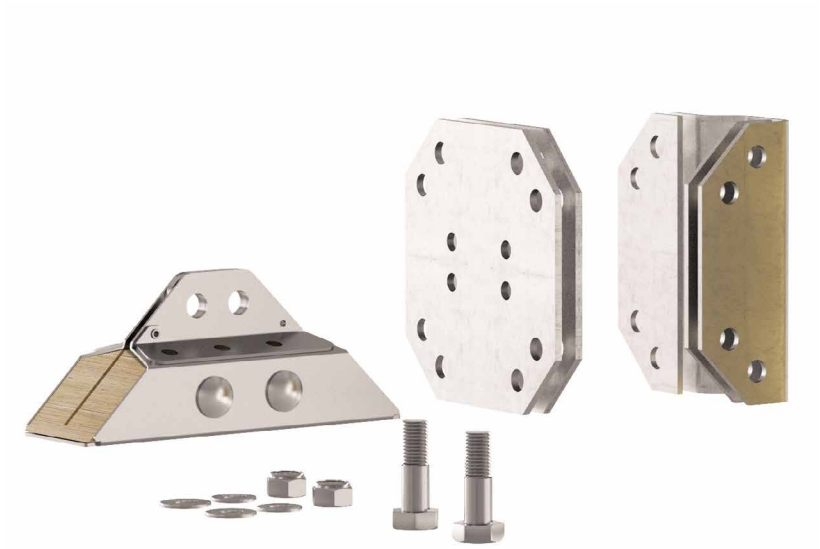

The complete **technical data sheet** is available at **www.rothoblaas.com**



FIELDS OF USE

Transportation, assembling and realization of timber buildings with CLT (Cross Laminated Timber) structure.

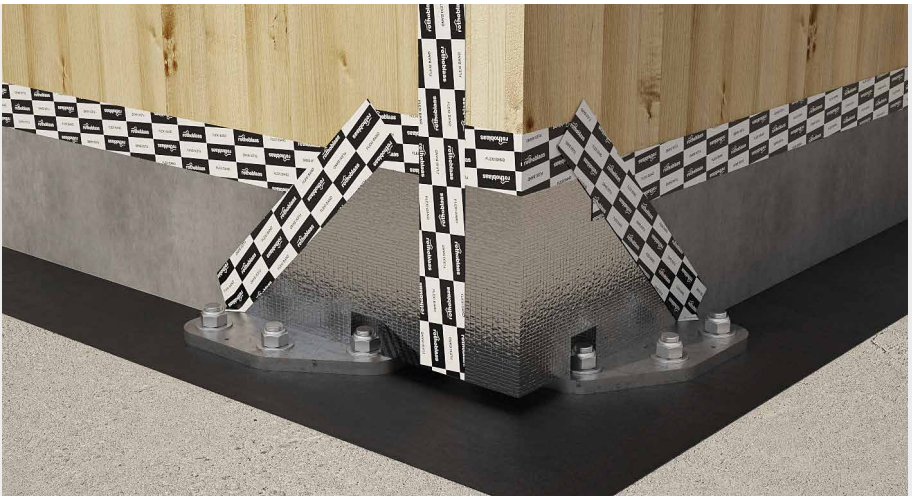

INNOVATION

The metal box element incorporates a multi-layer beechwood profile which is connected to the angles of the CLT walls with full thread screws.

PROTECTION

The use of insulating panels and self-adhesive protection membranes for CLT walls at the ground connection ensures the structure durability.

X-ONE

CODES AND DIMENSIONS

X-ONE

CODE	L [mm]	B [mm]	H [mm]	*L [in]*	*B [in]*	*H [in]*	pcs
XONE	273	90	113	*10 3/4*	*3 1/2*	*4 1/2*	1

X-VGS SCREW

CODE	L [mm]	b [mm]	d_1 [mm]	TX	pcs
XVGS11350	350	340	11	TX50	25

MANUAL TEMPLATE

CODE	description	pcs
ATXONE	manual template for X-ONE assembly	1

AUTOMATIC TEMPLATE

CODE	description	pcs
JIGONE	automatic template for X-ONE assembly	1

GEOMETRY

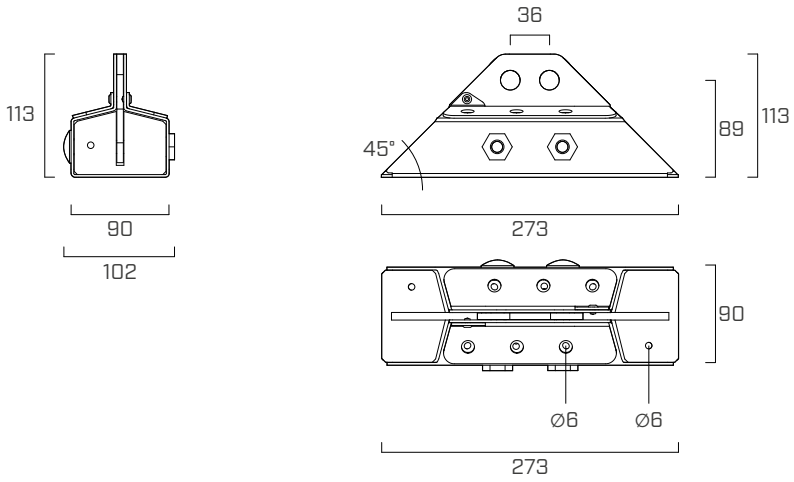

POSITIONING

Regardless of the panel thickness and its location on the construction site, the shear for fastening X-ONE is made at the top of the walls at 45°, and has a length of 360,6 mm.

INTER-STOREY AND TOP NODES SPECIAL STANDARD SHEAR

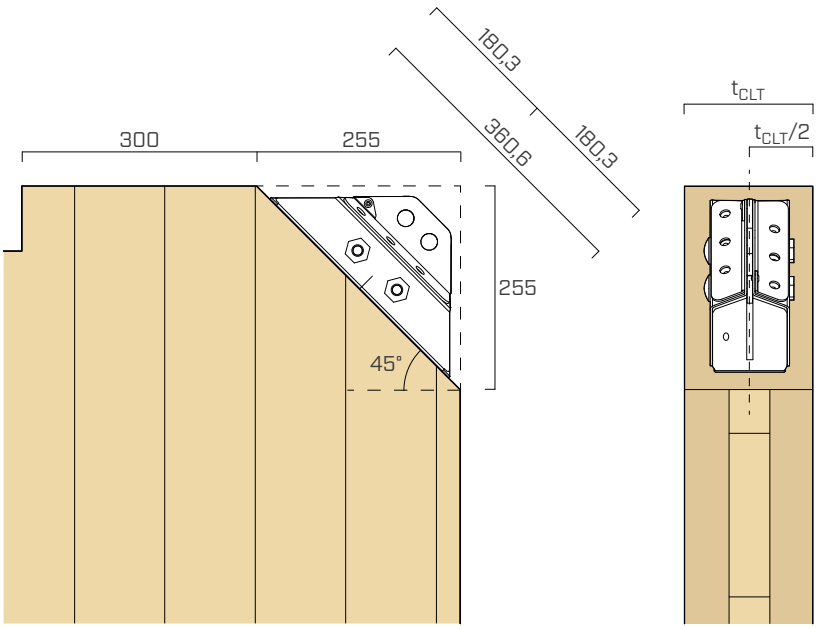

BOTTOM NODES SPECIAL STANDARD SHEAR

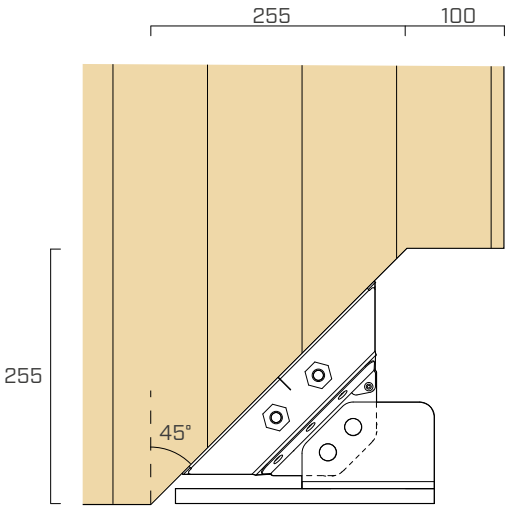

DESIGN STRENGTHS

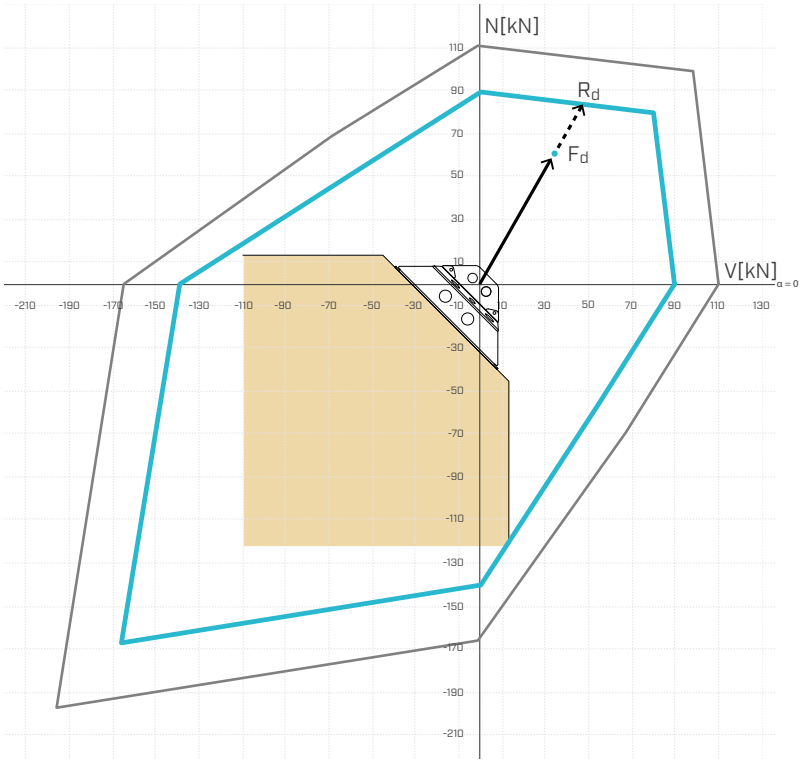

Design strength domain according to EN1995-1-1 and EN1993-1-8

The verification of the X-ONE connection is considered successful when the representative point of the F_d stress falls within the design strength domain:

$$F_d \leq R_d$$

The X-ONE design domain refers to the strength values and γ_M coefficients shown in the table and for loads with instantaneous life class (earthquake and wind).

LEGEND:

- R_k
- R_d EN 1995-1-1

A table summarizing the **characteristic strengths** in the various stress configurations and a reference to the relative safety coefficient according to the failure mode (steel or timber) is shown.

	GLOBAL STRENGTH	STRENGTH COMPONENTS		FAILURE MODES		PARTIAL SAFETY COEFFICIENTS[1]
α	R_k [kN]	V_k [kN]	N_k [kN]			γ_M
0°	**111.6**	111.6	0	VGS tension		γ_{M2} = 1,25
45°	**141,0**	99,7	99,7	block tearing on M16 holes		γ_{M2} = 1,25
90°	**111.6**	0,0	111.6	VGS tension		γ_{M2} = 1,25
135°	**97,0**	-68.6	68,6	VGS tension		γ_{M2} = 1,25
180°	**165.9**	-165.9	0	VGS thread extract		$\gamma_{M,timber}$ = 1,3
225°	**279.6**	-197.7	-197.7	timber compression		$\gamma_{M,timber}$ = 1,3
270°	**165.9**	0,0	-165.9	thread withdrawal VGS		$\gamma_{M,timber}$ = 1,3
315°	**97,0**	68,6	-68.6	VGS tension		γ_{M2} = 1,25
360°	**111.6**	111.6	0	VGS tension		γ_{M2} = 1,25

NOTES

(1) The partial safety coefficients should be taken according to the current regulations used for the calculation. The table shows the values on steel side according to EN1993-1-8 and on the timber side according to EN1995-1-1.

X-PLATE

CODES AND DIMENSIONS

X-SHAPE	T-SHAPE	G-SHAPE	J-SHAPE	I-SHAPE	O-SHAPE
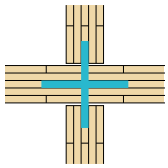	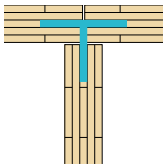	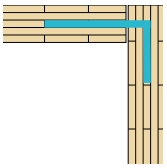	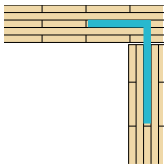		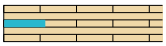
X-PLATE TOP					
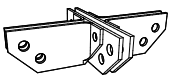	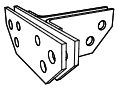	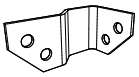	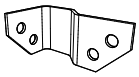	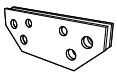	
TX100 **TX120** **TX140** 4 XONE 24 XVGS11350 8 XBOLT1660 2 XBOLT1260	**TT100** **TT120** **TT140** 3 XONE 18 XVGS11350 6 XBOLT1660 2 XBOLT1260	**TG100** **TG120** **TG140** 2 XONE 12 XVGS11350 4 XBOLT1660	**TJ100** **TJ120** **TJ140** 2 XONE 12 XVGS11350 4 XBOLT1660	**TI100** **TI120** **TI140** 2 XONE 12 XVGS11350 4XBOLT1660	
X-PLATE MID					
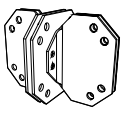	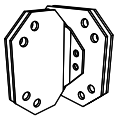	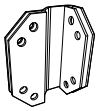	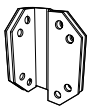	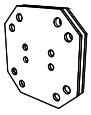	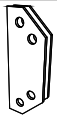
MX100 **MX120** **MX140** 8 XONE 48 XVGS11350 8 XBOLT1665 8 XBOLT1660 4 XBOLT1260	**MT100** **MT120** **MT140** 6 XONE 36 XVGS11350 8 XBOLT1665 4 XBOLT1660 4 XBOLT1260	**MG100** **MG120** **MG140** 4 XONE 24 XVGS11350 8 XBOLT1660	**MJ100** **MJ120** **MJ140** 4 XONE 24 XVGS11350 8 XBOLT1660	**MI100** **MI120** **MI140** 4 XONE 24 XVGS11350 8 XBOLT1665	**MO100** **MO120** **MO140** 2 XONE 12 XVGS11350 4 XBOLT1660
X-PLATE BASE					
4x 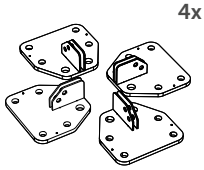	3x 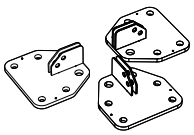	2x 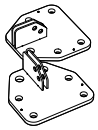	2x 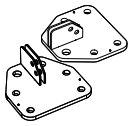	2x 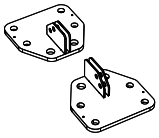	1x 
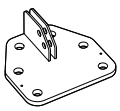	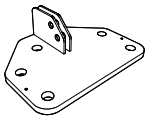	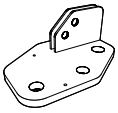	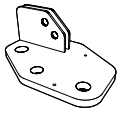	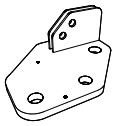	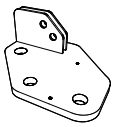
BMINI 1 XONE 6 XVGS11350 2 XBOLT1660	**BMAXI** 1 XONE 6 XVGS11350 2 XBOLT1660	**BMINIL** 1 XONE 6 XVGS11350 2 XBOLT1660	**BMINIR** 1 XONE 6 XVGS11350 2 XBOLT1660	**BMAXIL** 1 XONE 6 XVGS11350 2 XBOLT1660	**BMAXIR** 1 XONE 6 XVGS11350 2 XBOLT1660

INTELLECTUAL PROPERTY

- X-RAD is protected by the following patents:
  - EP2.687.645;
  - EP2.687.651;
  - US9809972.

X-PLATE SYSTEM

X-ONE makes the CLT panel a module with specific connections for fastening. X-PLATE allows modules to become buildings. Panels with thickness between 100 and 200 mm can be connected.
X-PLATE plates are the ideal solution for every construction site situation, developed for all geometric configurations. The X-PLATE plates are identified according to their positioning on the building level (X-BASE, X-MID, X-TOP) and according to the geometric configuration of the node and the thickness of the connected panels.

X-PLATE MID-TOP CODE COMPOSITION

LEVEL + NODE + THICKNESS

- LEVEL: indicates that they are MID (M) and TOP (T) inter-storey plates
- NODE: indicates the type of node (X, T, G, J, I, O)
- THICKNESS: indicates the thickness of the panel that can be used with that plate. There are three families of standard thickness values, 100 mm - 120 mm - 140 mm. All panel thickness values between 100 and 200 mm can be used, using universal plates for G, J, T and X nodes, in combination with specially developed SPACER shimming plates. The universal plates are available in the MID-S and TOP-S versions for panels with thickness between 100 and 140 mm and in the MID-SS and TOP-SS versions for panels with thickness between 140 and 200 mm.

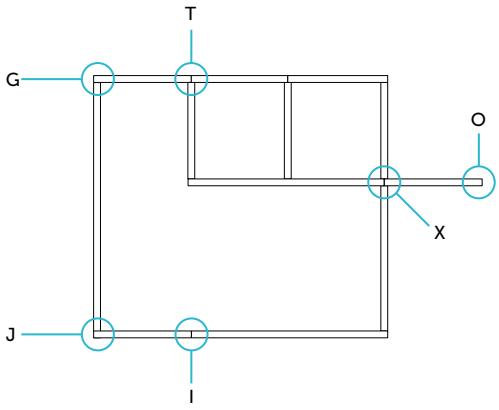

BASE X-PLATE CODE COMPOSITION

LEVEL + THICKNESS + ORIENTATION

- LEVEL: B indicates that they are base plates.
- THICKNESS: indicates the thickness interval of the panel that can be used with that plate. There are two families of plates, the first designed for thickness values from 100 to 130 mm (BMINI code), the second for thickness values from 130 to 200 mm (BMAXI code).
- ORIENTATION: indicates the orientation of the plate with respect to the wall, right/left (R/L), indication present only for asymmetrical plates.

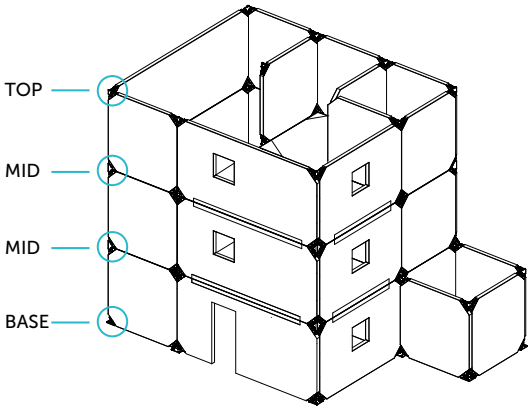

ACCESSORIES: X-PLATE BASE EASY PLATES FOR NON-STRUCTURAL FASTENINGS

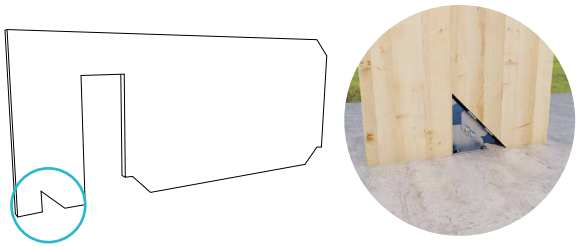

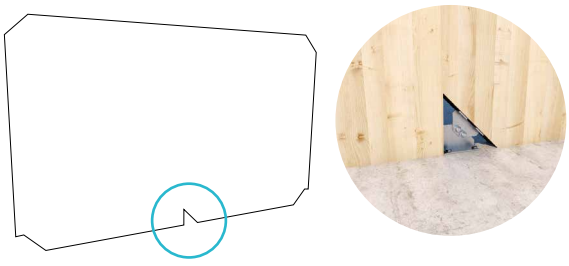

Where a foundation fastening is required for non-structural walls or temporary fastening for correct wall alignment (e.g. walls with very long length), it is possible to install the BEASYT plate (as an alternative to the X-ONE plate) on the bottom corner of the CLT panel (with simplified 45° shear without horizontal sawing) and the BEASYC plate (as an alternative to X-PLATE BASE plates) on the foundation slab.

CODES AND DIMENSIONS

CODE	s [mm]	$Ø_{SUP}$ [mm]	n. $Ø_{SUP}$	$Ø_{INT}$ [mm]	n. $Ø_{INT}$	pcs
BEASYT	5	9	3	17	2	1
BEASYC	5	17	2	13	2	1

SLOT

CONNECTOR FOR STRUCTURAL PANELS

VIDEO | MY PROJECT SOFTWARE | PATENTED | DESIGN REGISTERED | CE ETA-19/0167

SERVICE CLASS SC1 SC2

MATERIAL

alu 6005A EN AW-6005A aluminium alloy

EXTERNAL LOADS

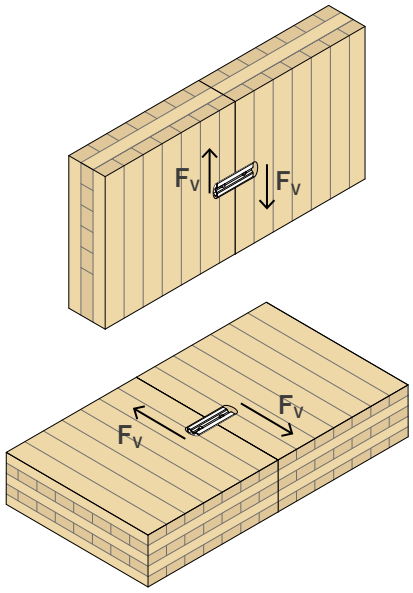

MONOLITHIC PANEL

It allows very high stiff joints and can transfer exceptional shear stresses between the panels. Ideal for walls and floors.

TOLERANCE

The wedge shape makes the insertion easy into the groove. It is possible to increase the thickness of the routing cut to handle all kinds of tolerances using SHIM shims.

FAST INSTALLATION

Possibility of assembly with inclined auxiliary screws that make tightening between panels easy. The honeycomb geometry and lightweight aluminium ensure excellent performance: one connector can replace up to 60 Ø6 screws.

USA, Canada and more design values available online.



VIDEO
Scan the QR Code and watch the video on our YouTube channel



FIELDS OF USE

Panel-to-panel shear connections.
High-stiffness connections in rigid diaphragm floors or in multi-panel walls with monolithic behaviour.
The connector also serves as an installation tool to close the gap between panels.

Can be applied to:

- CLT, LVL or glulam panel floors and walls

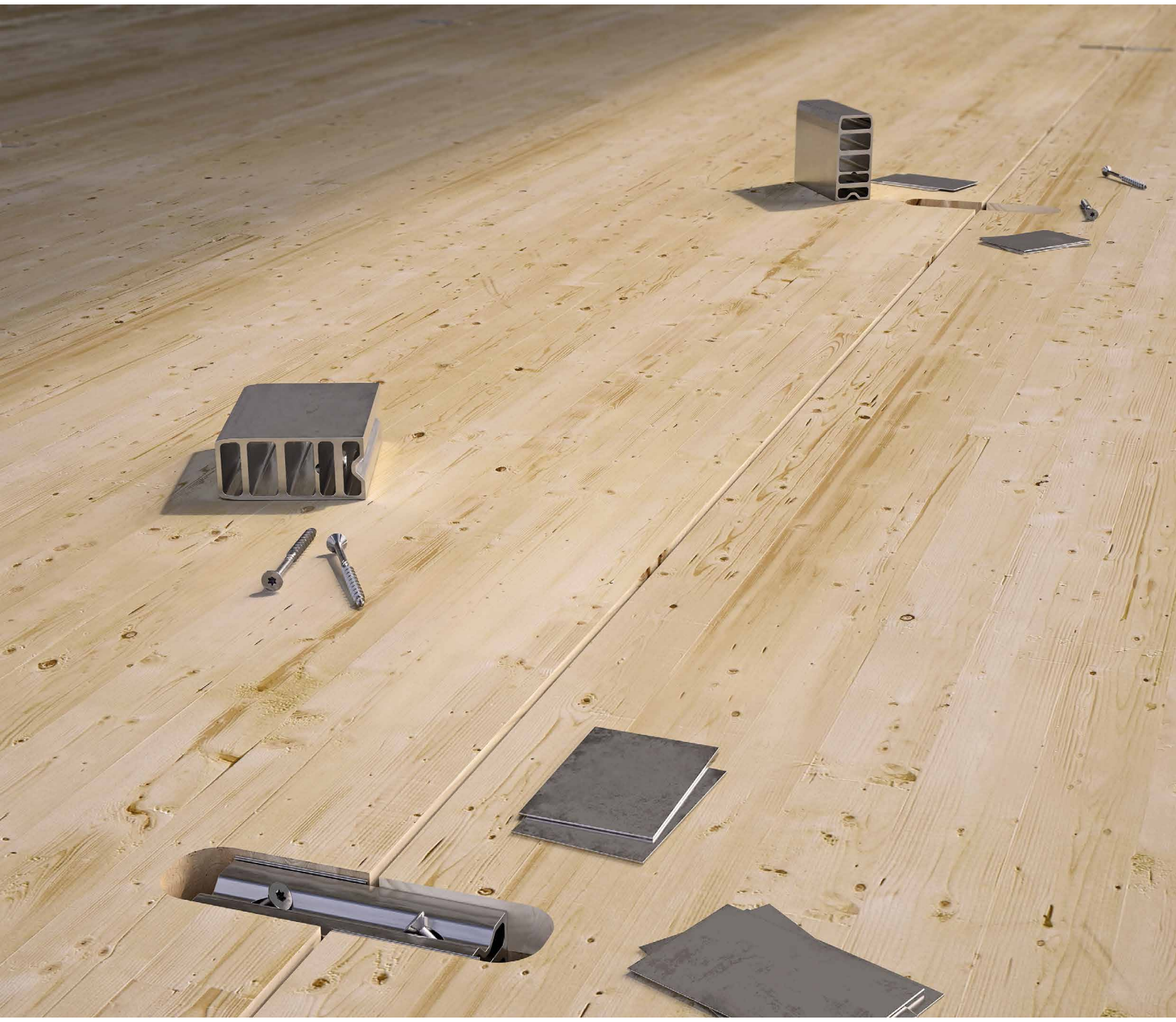

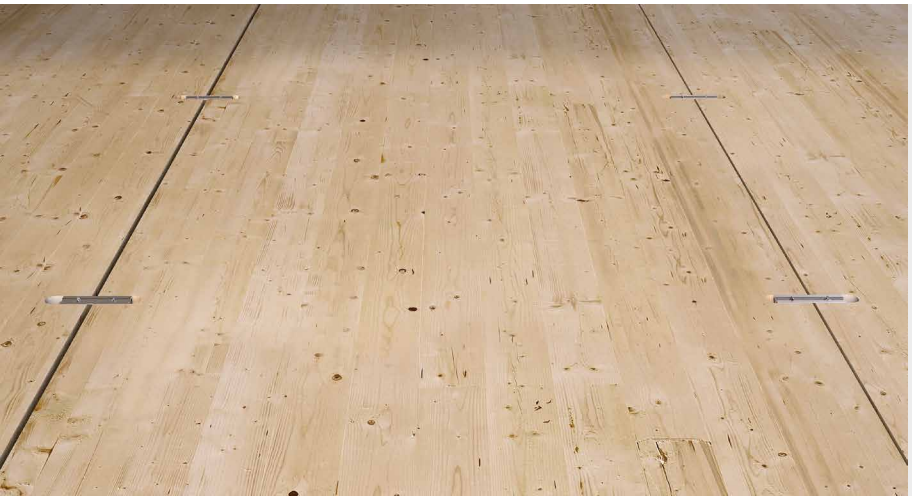

MONOLITHIC BEHAVIOUR

Ideal for panel wall and floor joints. It enables monolithic behaviour to be created between panels cut in the factory with small dimensions for transportation needs.

GLULAM, CLT, LVL

CE mark according to ETA. Values tested, certified and calculated also on glulam, CLT, LVL Softwood and LVL Hardwood.

CODES AND DIMENSIONS

CODE	L [mm]	*L* *[in]*	pcs
SLOT90	120	*4 3/4*	10

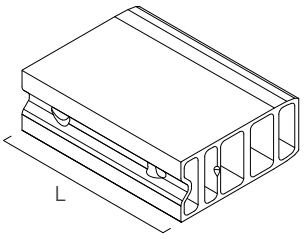

CODE	B [mm]	L [mm]	s [mm]	*B* *[in]*	*L* *[in]*	*s* *[in]*	pcs
SHIMS609005	89	60	0,5	*3 1/2*	*2 3/8*	*0.02*	100
SHIMS609010	89	60	1	*3 1/2*	*2 3/8*	*0.04*	50

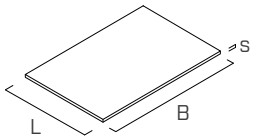

Material: bright zinc plated carbon steel

FASTENERS

type	description	d [mm]	L [mm]	support
HBS	countersunk screw 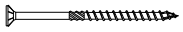	6	120	
HBS	countersunk screw 	8	140	

For further details please see the "TIMBER SCREWS AND DECK FASTENING" catalogue.

GEOMETRY

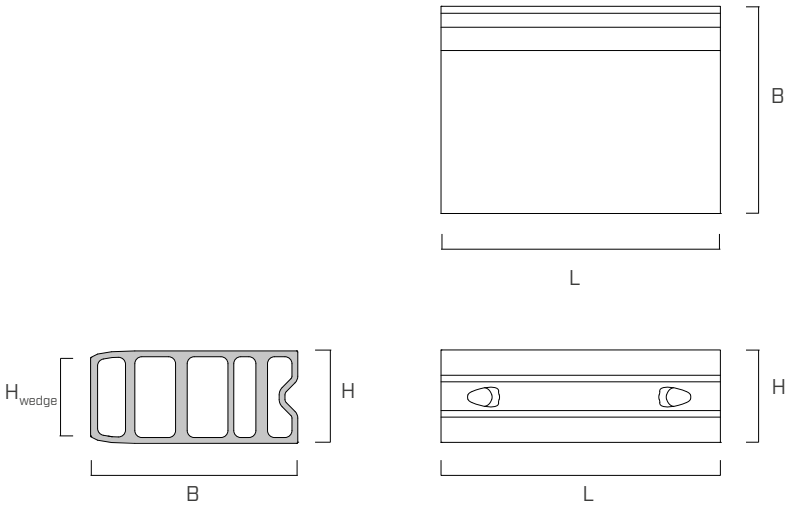

B [mm]	H [mm]	H_{wedge} [mm]	L [mm]	n_{screws} [pcs]
89	40	34	120	2

The screws are optional and not included in the package.

GEOMETRY

ROUTING IN THE PANEL

PANEL WITH FLAT EDGE

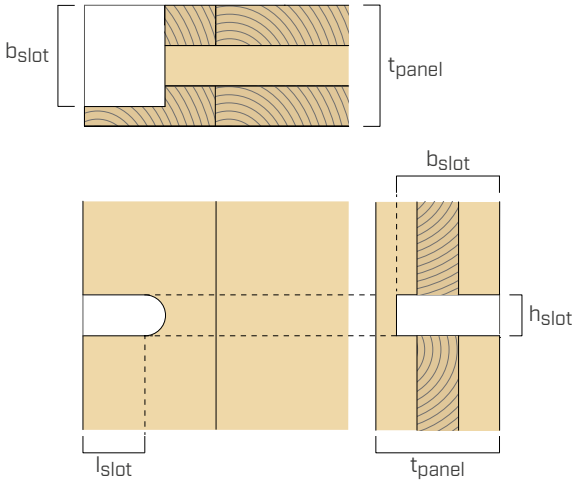

PANEL WITH TAPPED EDGE

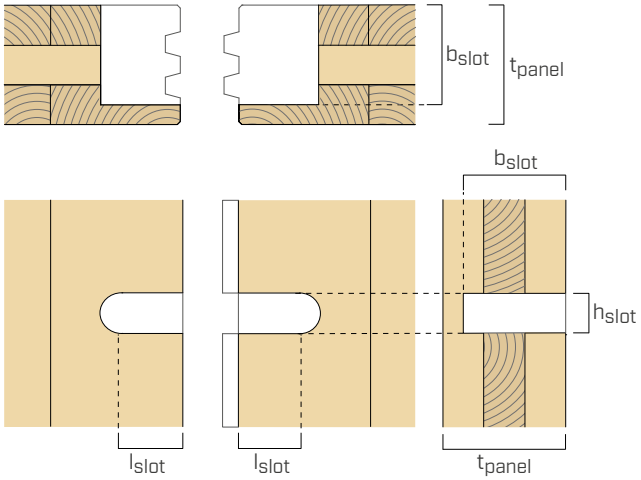

$b_{slot,min}$ [mm]	$l_{slot,min}$ [mm]	$t_{panel,min}$ [mm]	h_{slot} (1) [mm]
90	60	90	40,5

INSTALLATION

PANEL WITH FLAT EDGE

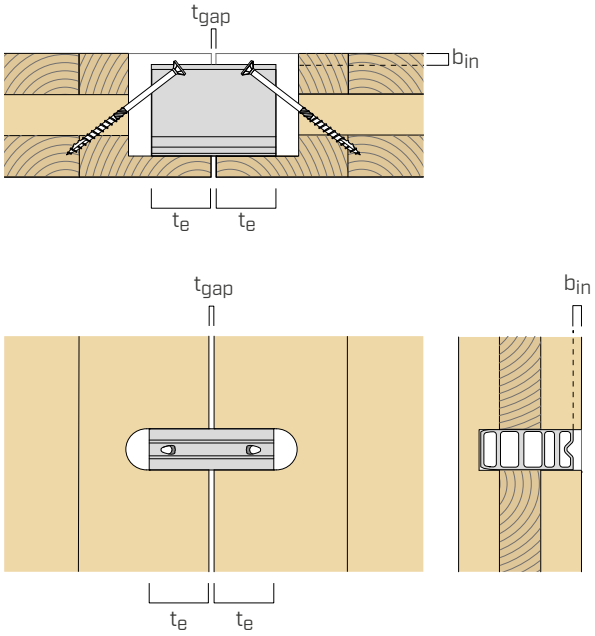

PANEL WITH TAPPED EDGE

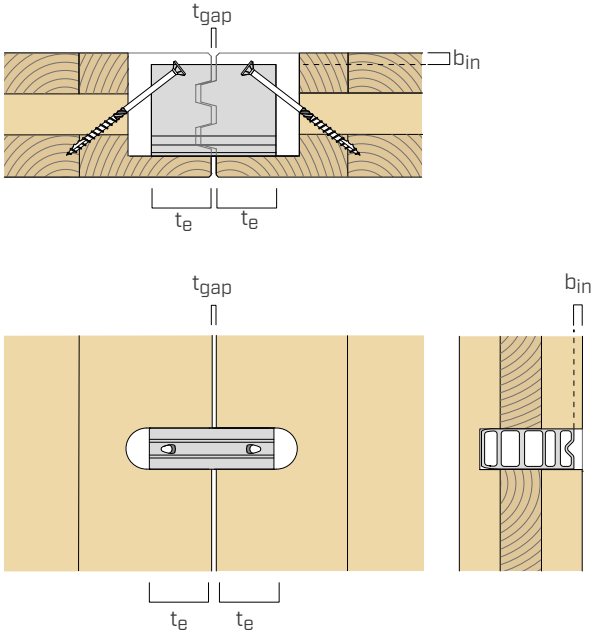

$t_{gap,max}$ (2) [mm]	$b_{in,max}$ [mm]	$t_{e,min}$ [mm]
5	t_{panel}-90 (3)	57,5

USE OF THE CONNECTOR AS ASSEMBLY EQUIPMENT

The connector can also be used as assembly equipment, thanks to its wedge shape and the presence of screws.

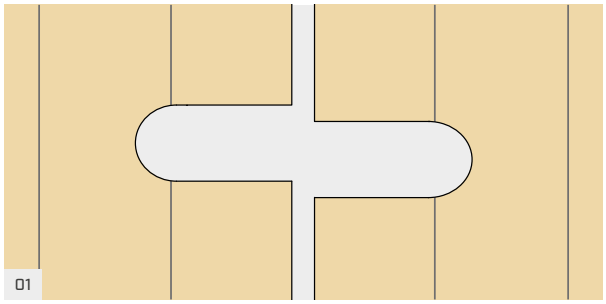

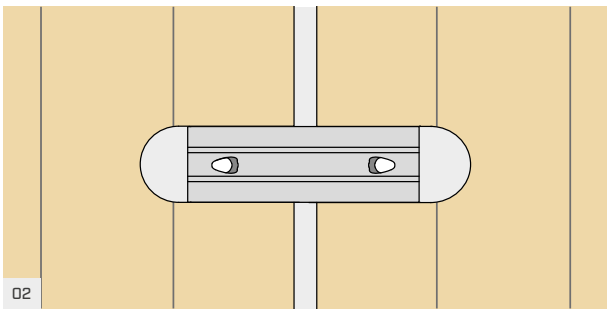

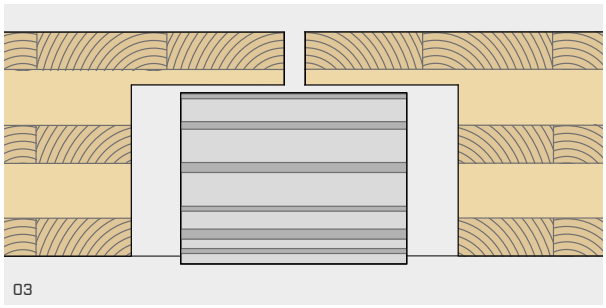

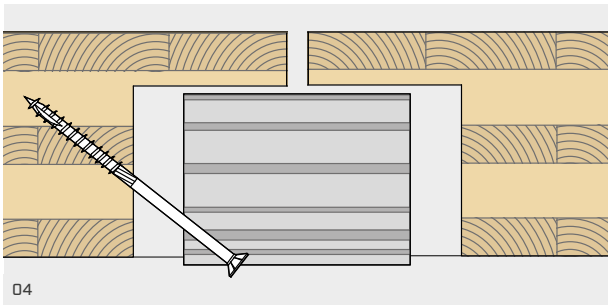

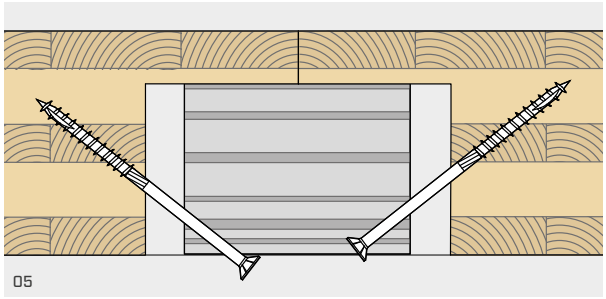

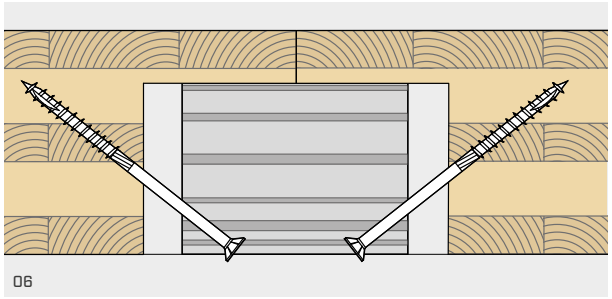

USE OF SHIM ACCESSORIES

The connector is designed for a h_{slot} thickness of 40.5 mm but a different nominal h_{slot} size can be set. For example, by using an oversized routing, all tolerances in the connection can be compensated for:

- tolerance on total routing thickness h_{slot}.
- tolerance on the reciprocal positioning of the two grooves on the opposing panels.

Depending on the actual situation on site, the different spacer models can be combined.

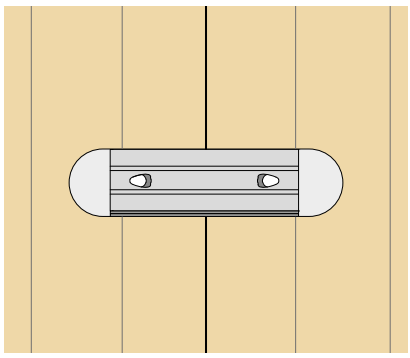

Spacers positioned on one side only, to compensate for the thickness of the routing.

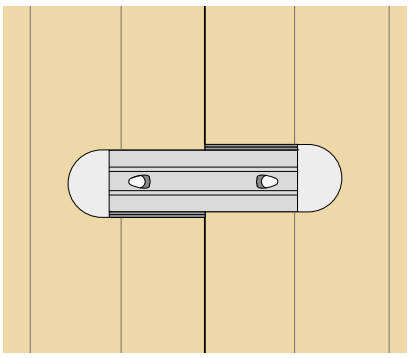

Spacers positioned on opposite sides, to compensate for a misalignment of the two grooves.

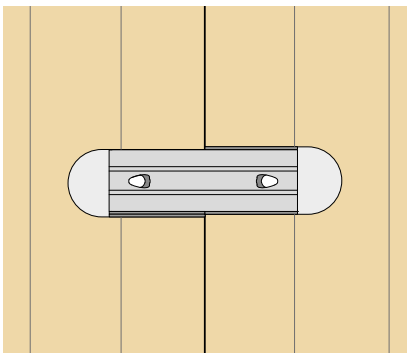

Combination of spacers for use in intermediate situations.

STRUCTURAL VALUES

				$R_{v,k}$ [kN]	k_{ser} [kN/mm]
CLT [5]	$\sum d_0$ [6] =	40	[mm]	**34,4**	17,50
		45	[mm]	**37,8**	
		49	[mm]	**40,6**	
		50	[mm]	**41,3**	
		55	[mm]	**44,7**	
		59	[mm]	**47,5**	
		60	[mm]	**48,2**	
		65	[mm]	**51,6**	
		69	[mm]	**54,4**	
LVL softwood	cross grain veneer [7]			**52,7**	24,00
	parallel grain veneer [8]			**71,0**	
LVL hardwood	cross grain veneer [9]			**125,7**	48.67
	parallel grain veneer [10]			**116,6**	
glulam [11]	-			**68,1**	25.67

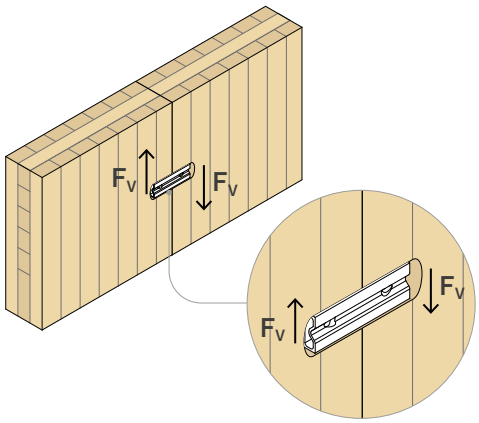

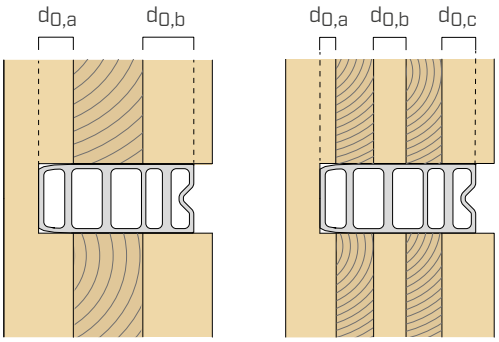

$$\sum d_0 = d_{0,a} + d_{0,b} + d_{0,c}$$

As an example, in the case of an CLT panel with a thickness of 160 mm and 40/20/40/20/40 layer structure, the sum d_0 parameter is equal to 69 mm, with a characteristic strength of 54.4 kN.

NOTES

(1) The h_{slot} thickness of 40.5 mm is to be regarded as indicative and depends on the precision of the specific machine used to cut the panels. When using the connector for the first time, it is recommended that 41.0 mm be grooved and to shim the joints, if any, using SHIM. For subsequent uses, it may be considered whether to reduce to 40.5 mm.

(2) The gap between the panels must be taken into account when calculating the connector strength; refer to ETA-19/0167 for the calculation. The gap between panels may contain a filling material.

(3) The connector can be installed in any position within the panel thickness.

(4) For CLT e LVL with cross grain veneer, in case of installation with $a_1 < 480$ mm or $a_{3,t} < 480$ mm, the strength is reduced with a k_{a1} coefficient, as provided by ETA-19/0167.

$$k_{a1} = 1 - 0{,}001 \cdot \left(480 - min\left\{ a_1 ; a_{3,t} \right\}\right)$$

(5) Values calculated according to ETA-19/0167 and valid in Service Class 1 according to EN 1995-1-1. The following parameters were considered in the calculation: $f_{c,0k}$ = 24 MPa, ρ_k =350 kg/m^3, t_{gap}= 0 mm, $a_1 \geq 480$ mm, $a_{3,t} \geq 480$ mm.

(6) The parameter $\sum d_0$ corresponds to the cumulative thickness of the layers parallel to F_v, inside the thickness B of the connector (see image).

(7) Values calculated according to ETA-19/0167. The following parameters were considered in the calculation: $f_{c,0k}$ = 26 MPa, ρ_k = 480 kg/m^3, t_{gap} = 0 mm, $a_1 \geq 480$ mm, $a_{3,t} \geq 480$ mm.

(8) Values calculated according to ETA-19/0167. The following parameters were considered in the calculation: $f_{c,0k}$ =35 MPa, ρ_k = 480kg/m^3, t_{gap} = 0 mm.

(9) Values calculated according to ETA-19/0167. The following parameters were considered in the calculation: $f_{c,0k}$ = 62 MPa, ρ_k = 730 kg/m^3, t_{gap} = 0 mm, $a_1 \geq 480$ mm, $a_{3,t} \geq 480$ mm.

(10) Values calculated according to ETA-19/0167. The following parameters were considered in the calculation: $f_{c,0k}$ = 57,5 MPa, ρ_k = 730 kg/m^3, t_{gap} = 0 mm.

(11) Values calculated according to ETA-19/0167 and valid in Service Class 1 according to EN 1995-1-1. The following parameters were considered in the calculation: $f_{c,0k}$ = 24 MPa, ρ_k = 385 kg/m^3, t_{gap} = 0 mm.

GENERAL PRINCIPLES

- Characteristic values comply with the EN 1995:2014 standard in accordance with ETA-19/0167.
- The design values are obtained from the characteristic values as follows:

$$R_d = \frac{R_k \cdot k_{mod}}{\gamma_M}$$

  The coefficients k_{mod} and γ_M should be taken according to the current regulations used for the calculation.
- Dimensioning and verification of the timber elements must be carried out separately.
- Resistance values for the fastening system are valid for the calculation examples shown in the table. For different calculation methods, the MyProject software is available free of charge (www.rothoblaas.com).
- The connector can be used for connections between glulam, CLT and LVL elements or similar glued elements.
- The contact surface between the panels can be flat or "male-female" shaped, see the image in the INSTALLATION section.
- A minimum of two connectors must be used within one connection.
- The connectors must be inserted with the same pull-through depth (t_e) into both elements to be fastened.
- The two inclined screws are optional and have no influence on the strength and stiffness calculation.

INTELLECTUAL PROPERTY

- The SLOT connector is protected by the following patents: EN102018000005662 | US11.274.436.
- It is also protected by the following Registered Community Designs: RCD 005844958-0001 | RCD 005844958-0002.

MINIMUM DISTANCES

WALL

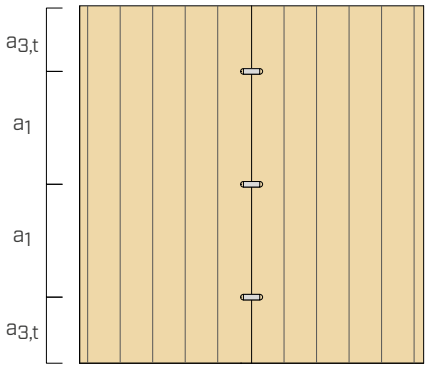

FLOOR SLAB

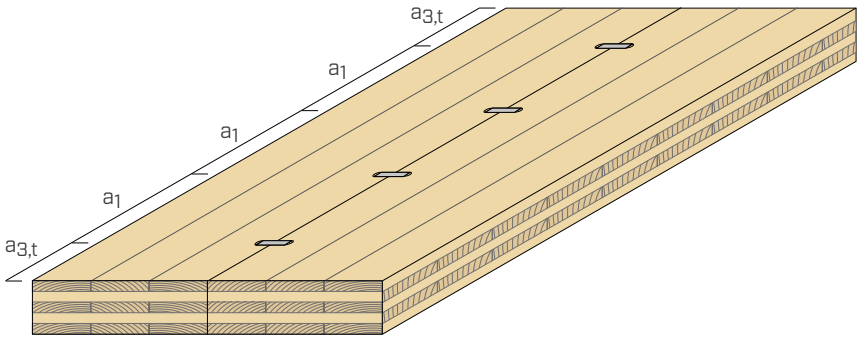

		CLT	LVL		glulam
			cross grain veneer	parallel grain veneer	
a_1	[mm]	320(4)	320(4)	480	480
$a_{3,t}$	[mm]	320(4)	320(4)	480	480

ANALYTICAL COMPARISON BETWEEN CONNECTION SYSTEMS

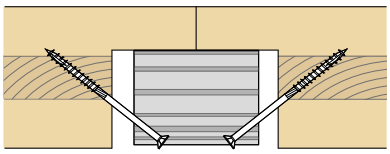

SLOT

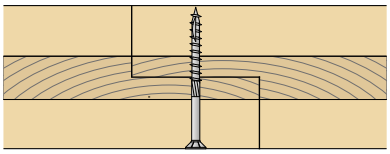

HALF-LAP JOINT

HBS Ø8 x 100

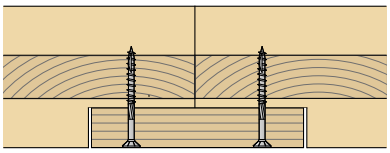

SPLINE JOINT

2 x HBS Ø6 x 70

INCREASED SPACING

connection system	number of connectors	spacing [mm]	$R_{v,k}$ [kN]
SLOT	2	967	**81.1**
HALF-LAP	14	200	**42,6**
SPLINE JOINT	56	100	**60,9**

REDUCED SPACING

connection system	number of connectors	spacing [mm]	$R_{v,k}$ [kN]
SLOT	4	580	**162.3**
HALF-LAP	28	100	**73,1**
SPLINE JOINT	114	50	**70.1**

The strength values are calculated according to ETA-19/0167, ETA-11/0030 and EN 1995:2014.

The tables show a comparison in terms of strength between SLOT and two types of traditional connection. A 2.9 m high wall panel was used for the calculation. In the INCREASED SPACING table, 200 mm and 100 mm spacings have been used for half-lap joint and spline joint respectively. For the SLOT connector a spacing of about 1 m has been used; in this case the screw connections offer much lower strengths than the SLOT connector. As shown in the REDUCED SPACING table, halving the distance between the screws (and therefore doubling the number of screws) it is not possible to reach the strength offered by only the two SLOT connectors alone of the previous case, due to the reduction of strength given by the effective number. Using 4 SLOT connectors, it is also possible to achieve very difficult strength values with screws. This means that high connection strength values cannot be achieved with traditional connections.

CLT MULTI-PANEL WALLS WITH HOLD-DOWN AT THE ENDS

SINGLE-WALL BEHAVIOUR

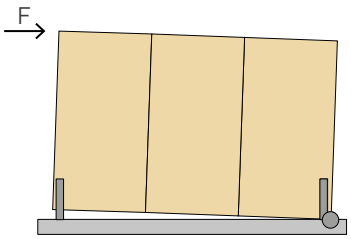

COUPLED PANEL BEHAVIOUR

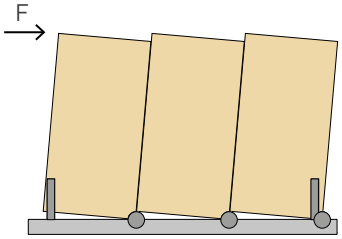

There are two possible rotational behaviours of the multi-panel CLT wall, determined by multiple parameters. At equal conditions, it can be stated that the k_v/k_h stiffness ratio determines the rotational behaviour of the wall, where:

- k_v total shear stiffness of the connection between panels;
- k_h tensile strength of the hold-down.

At equal conditions, it can be stated that for high k_v/k_h values (i.e. for high k_v values) the kinematic behaviour of the wall tends to be similar to the single wall behaviour. This type of wall is much easier to design than a wall with coupled panel behaviour, due to the simplicity of modelling.

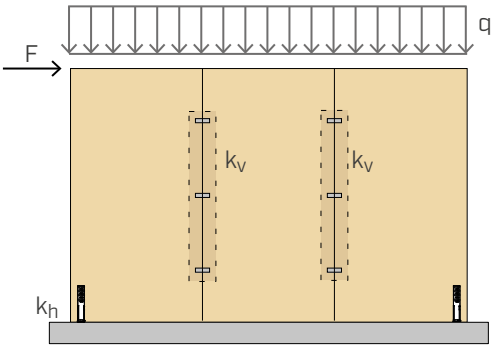

MULTIPANEL CLT FLOORS

The distribution of horizontal loads (earthquake or wind) from the floor to the lower walls depends on the stiffness of the floor in its own plane. A stiff floor allows the transmission of horizontal external loads to the underlying walls with diaphragm behaviour. The stiff diaphragm behaviour is much easier to design than a deformable floor in its own plane, due to the simplicity in the structural outline of the floor. In addition, many international seismic regulations, require the presence of a stiff diaphragm as a requirement to obtain the building plan regularity and therefore a better seismic response of the building.

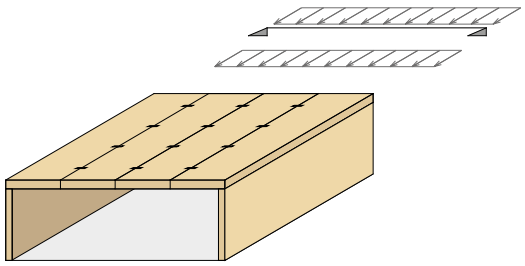

THE ADVANTAGE OF HIGH STIFFNESS CERTIFIED BY TEST

The use of the SLOT connector, characterized by high stiffness and strength values, leads to undoubted advantages, both in the case of multi-panel CLT wall and in the case of the diaphragm floor. These strength and stiffness values are experimentally validated and are certified according to ETA-19/0167; this means that the designer is provided with certified, precise and reliable data.

SHARP METAL

STEEL HOOKED PLATES

VIDEO | CALCULATION TOOL | PATENTED | ETA-24/0058

REVOLUTIONARY TECHNOLOGY

The plates have a multitude of small hooks spread over the two surfaces. The joint is made by mechanically inserting the hooks into the timber.

DRY GLUING

Ideal for transmitting shear forces in a diffuse way between two timber components. The high stiffness of the system places it as an intermediate solution between a glueing and a joint with cylindrical shank connectors.

TBS MAX SCREWS

The hooks pull-through into the timber can be achieved by the compression generated by the TBS MAX flange head screws. A mechanical or vacuum press can be used for industrialised applications.

CERTIFIED

The new technology is certified according to ETA-24/0058 as a guarantee of the reliability of the research and testing carried out.

USA, Canada and more design values available online.

SERVICE CLASS SC1 SC2

MATERIAL

Zn ELECTRO PLATED bright zinc plated carbon steel

EXTERNAL LOADS

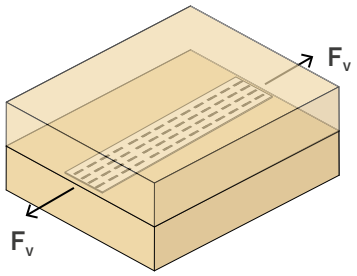

VIDEO
Scan the QR Code and watch the video on our YouTube channel

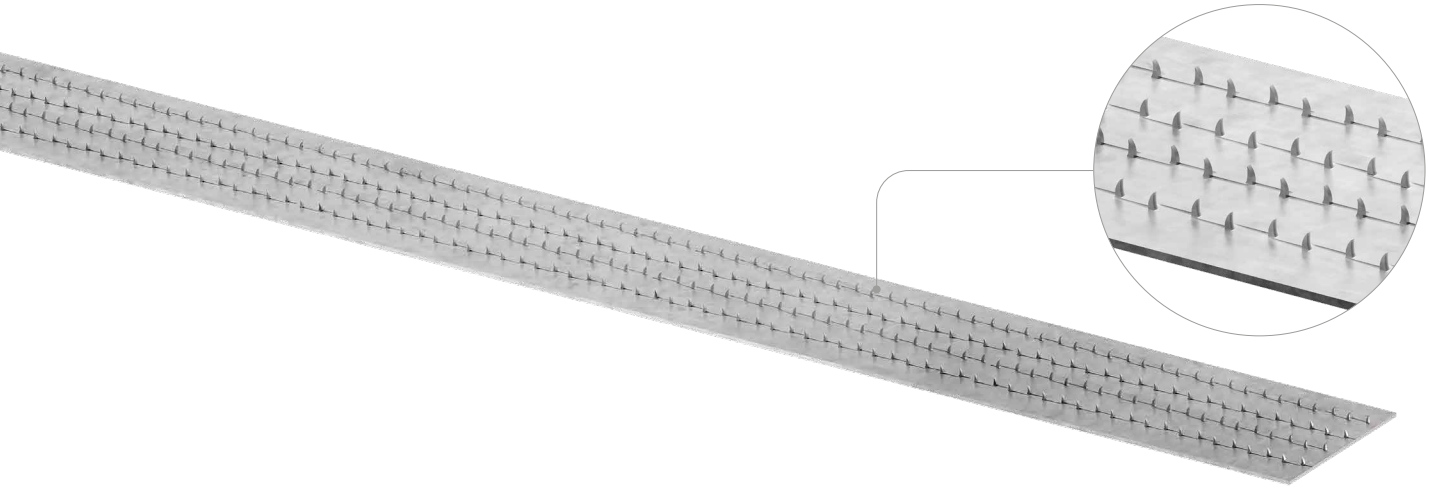



FIELDS OF USE

Shear strength timber-to-timber connections with high stiffness.
It can be used as an additional connection to limit the sliding of the connection to the Serviceability Limit State.

Can be applied to:

- solid timber or glulam
- CLT or LVL softwood panels





RIBBED FLOOR WITHOUT GLUE

Thanks to the hook technology, it is ideal for the production of ribbed or formwork floors without the use of glues, adhesives and presses. It eliminates the waiting times for glue curing. Possibility of transporting disassembled floors to the construction site.

STRUCTURAL REINFORCEMENT

Ideal for structural reinforcement of beams by dry glueing of additional timber elements.

CODES AND DIMENSIONS

SHARP METAL

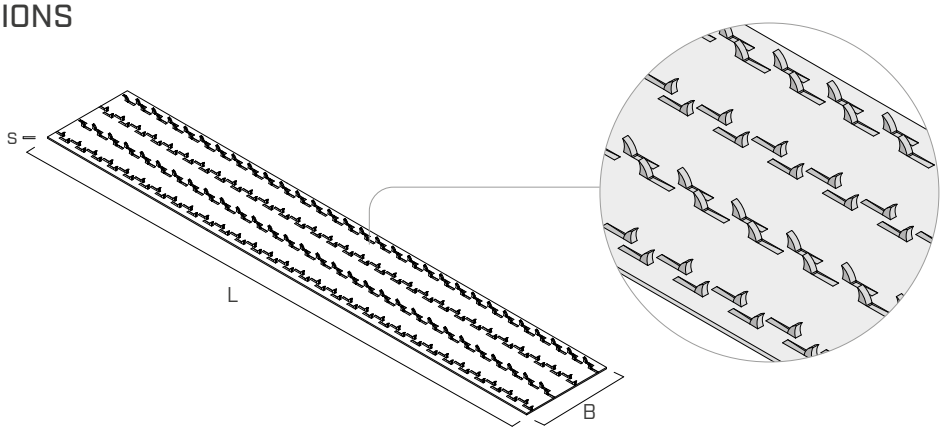

CODE	B [mm]	L [mm]	s [mm]	*B [in]*	*L [ft]*	*s [in]*		pcs
SHARP501200	50	1200	0,75	*1 15/16*	*3.94*	*1/31*	●	10

FASTENERS

TBS MAX - XL flange head screw

d_1 [mm]	d_K [mm]	CODE	L [mm]	b [mm]	A [mm]	pcs
8 TX 40	24,5	**TBSMAX8120**	120	100	20	50
		TBSMAX8160	160	120	40	50
		TBSMAX8180	180	120	60	50
		TBSMAX8200	200	120	80	50
		TBSMAX8220	220	120	100	50
		TBSMAX8240	240	120	120	50
		TBSMAX8280	280	120	160	50
		TBSMAX8320	320	120	200	50
		TBSMAX8360	360	120	240	50
		TBSMAX8400	400	120	280	50

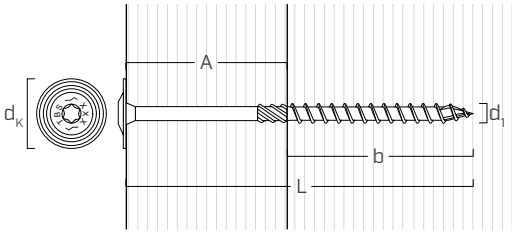

For further details please see the "TIMBER SCREWS AND DECK FASTENING" catalogue.

WASHER

CODE	rod	d_{INT} [mm]	d_{EXT} [mm]	s [mm]	pcs
ULS13373	**M12**	13,0	37,0	3,0	100

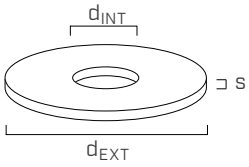

RELATED PRODUCTS

TUCAN - shears for long, straight through cuts



CODE	length [mm]	pcs
TUC350	350	1



FIELDS OF APPLICATION

The SHARP METAL dry connection system can be used both in new constructions and in structural upgrading and reinforcement.

Due to the high stiffness and the absence of construction tolerances, the coupling of additional sections is immediately active and allows the construction of composite sections without complicated preparation operations (A), or by working on the sides of existing beams, it is possible to use clamping systems with mechanical clamps and ensure a high speed of intervention (B).

Another area of application is in the reduction of sliding at low force levels, to reduce the effect of free sliding in bolt and dowel connections (C). This aspect, for large span truss structures, can be a great advantage in reducing displacements.

(A) COMPOSITE SECTIONS

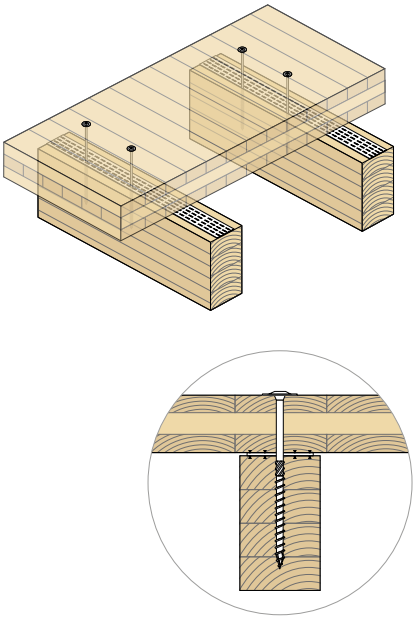

(B) STRUCTURAL REINFORCEMENT

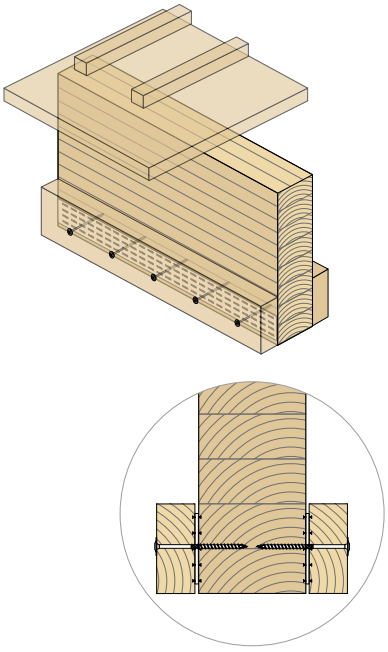

(C) LOCAL JOINT STIFFENERS

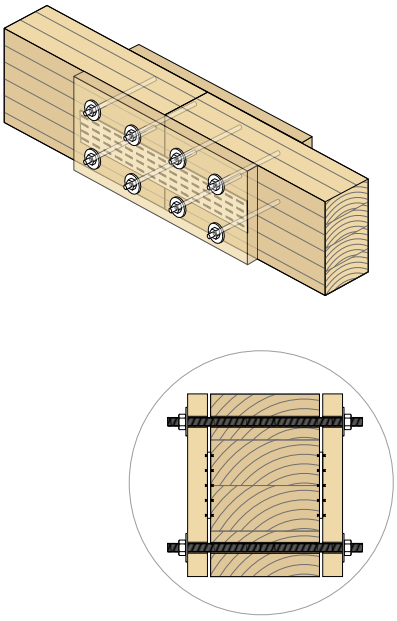

PRODUCTION AND TRANSPORT

ASSEMBLY IN THE FACTORY

The effectiveness of SHARP METAL plates can be maximised if the components are connected in an installation equipped with press systems or similar, e.g. for series prefabrication. This reduces assembly time, as there is no need to wait for glues or resins to harden.
In this case, a minimum number of screws must be inserted to maintain contact of the elements for tensile forces orthogonal to the plate.

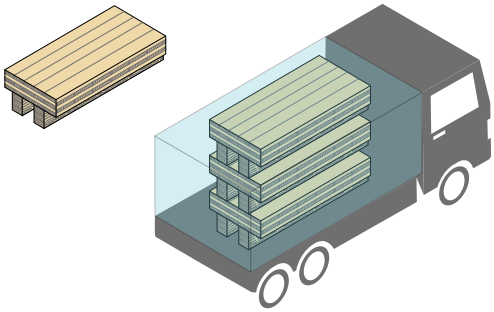

ASSEMBLY ON SITE

If the components are assembled on site, pressure to ensure hook pull-through can be achieved with TBS MAX screws. With this methodology, it is possible to substantially reduce the transport costs of compound "T" elements and to exploit the potential of assembling components from different manufacturers (e.g. CLT and glulam). Thanks to the performance of the screws and the reduced thickness of the SHARP metal plate, no pre-drilling is necessary in SHARP METAL plates, and cutting to length can easily be done with TUCAN shears.

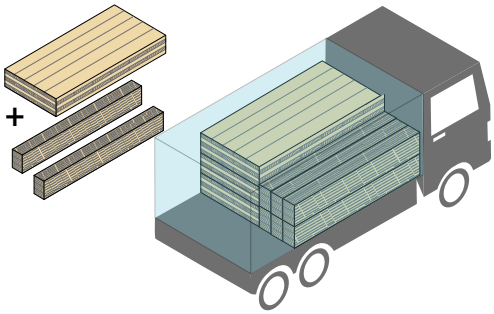

MOUNTING

The connection with SHARP METAL requires a minimum application pressure of 1.2 MPa, assuming an average density of 480 kg/m^3, to ensure correct hook pull-through.
This pressure value can be applied using different technologies depending on specific requirements and production. Two prevailing types can be identified: fastening with presses or by means of cylindrical shank connectors such as flange head screws or threaded rods.

fastening through screws

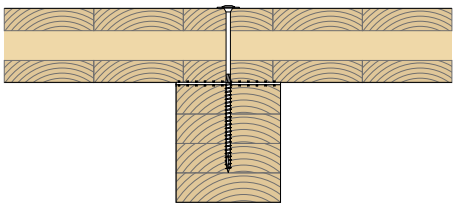

fastening with threaded rods or bolts

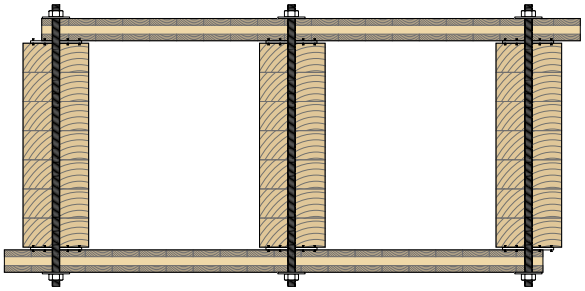

PRE-INSTALLATION ON THE FIRST COMPONENT

In order to facilitate installation, a finger joint template made from a milled hardwood element can be used on one side of the connection, as shown in the figure. Using a hammer, it is possible to pull-through the teeth of SHARP METAL strips without damaging them.

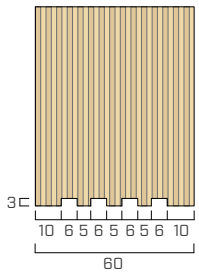

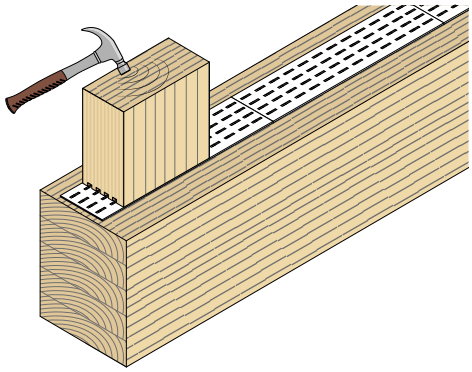

SECOND COMPONENT ASSEMBLY

The force required to close the joint can be applied by means of flange head screws. To achieve this, it is necessary that the threaded portion of the screw falls entirely into one of the two connected elements. The efficiency of the screws is influenced by the stiffness of the connected components. The average spacing suggested in the table derive from practical applications on site.
Due to the very low plate thickness, "discontinuous" configurations, i.e. with plate portions at intervals, can be used to optimise system effectiveness. If the capacity of the screws used to close the joint is to be increased, additional washers ULS13373 can be used to enlarge the force diffusion area and increase the strength of the screw head pull-through.

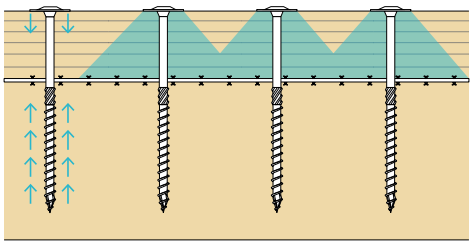

SUGGESTED SPACING

fastening	average spacing
TBS	8·d/10·d=64/80 mm
TBS MAX	15·d/20·d=120/160 mm
TBS MAX + ULS13373	20·d/25·d = 160/200 mm

The use of SHARP METAL in combination with screws allows a practical and safe installation. The hooked plate provides considerable confinement to the wood, increasing its strength against splitting failure due to loads parallel to the fiber acting on the screws.
The use of screws is also recommended for supporting tensile loads between connected surfaces, e.g. in a floor-wall shear connection. Although the vertical loads of the deck ensure adequate pressure between the surfaces, it is possible that tension is transmitted. The screws, in this case, absorb the stress without affecting the shear connection tightness.

STRUCTURAL VALUES | F_V

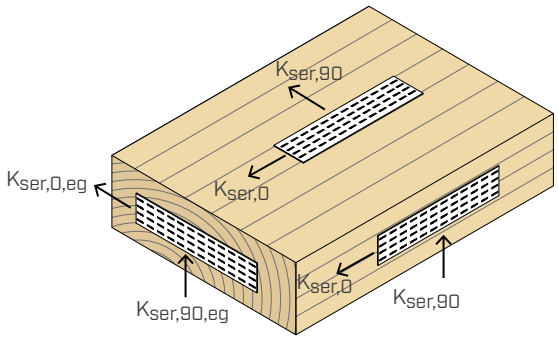

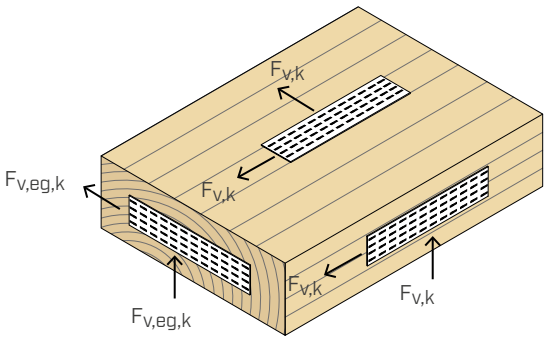

Characteristic strength values - lateral grain [1]

TBS screws spacing	SOLID TIMBER, GLULAM and CLT		
	$F_{v,k}$ [MPa]	$k_{ser,0}$ [N/mm^3]	$k_{ser,90}$ [N/mm^3]
a ≤ 100mm	1,50	3,05	1,13
100 < a ≤ 175mm	1,05	2,70	1,00
without screws(*)	0,78	2,50	0,85

(*)Minimum screws must be inserted to ensure that contact is maintained, the minimum spacing must be 250 mm.

Characteristic strength values - head grain [1]

TBS screws spacing	SOLID TIMBER AND GLULAM			CLT		
	$F_{v,eg,k}$ [MPa]	$k_{ser,0,eg}$ [N/mm^3]	$k_{ser,90,eg}$ [N/mm^3]	$F_{v,eg,k}$ [MPa]	$k_{ser,0,eg}$ [N/mm^3]	$k_{ser,90,eg}$ [N/mm^3]
100 < a ≤ 175mm	0,82	1,40	0,85	1,00	1,40	0,85

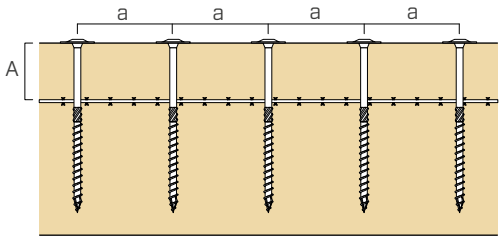

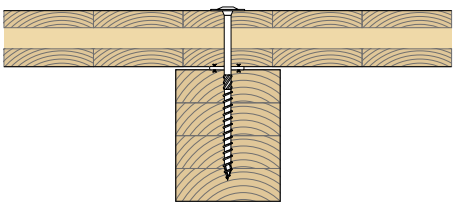

NOTES

(1) If TBSMAX screws or smaller spacings are used for safety reasons, the values given in the table can be maintained.

(2) If smaller spacings are used, the values given in the table must still be used for safety reasons.

INTELLECTUAL PROPERTY

- SHARP METAL is protected by the following patent: IT102020000025540.

GENERAL PRINCIPLES

- Characteristic values are consistent with EN 1995-1-1 and in accordance with ETA-24/0058.
- Dimensioning and verification of the timber elements must be carried out separately.
- Timber structural elements connected with SHARP METAL, when subject to high hygrometric shrinkage, must be effectively fastened with screws to avoid excessive dimensional distortion.
- The minimum thickness of the element to be connected, if screws are used, is 60 mm.
- SHARP METAL must be used on medium density wood-based materials $\rho_m \leq 450$ kg/m^3.
- The strengths and stiffness values are obtained experimentally on wooden specimens with a density of 385 kg/m^3. If timbers with different characteristic densities are used, the strength value must be multiplied by:

$$k_{dens} = \left(\frac{\rho_k}{385}\right)^{0.5}$$

- The tensile strength of SHARP METAL plates, parallel to the axis is equal to: $F_{tens,0k}$= 19 kN

MECHANICAL BEHAVIOUR

Timber-to-timber connections made with SHARP METAL and screws allow an intermediate structural behaviour between connections with cylindrical shank means and gluing.
This peculiar behaviour ensures the reduction of displacements due to assembly tolerances and, at the same time, allows good ductility for large displacements in boundary conditions.
These properties can be effectively modulated through careful design of service limit state (SLS) and ultimate limit state (ULS) conditions.

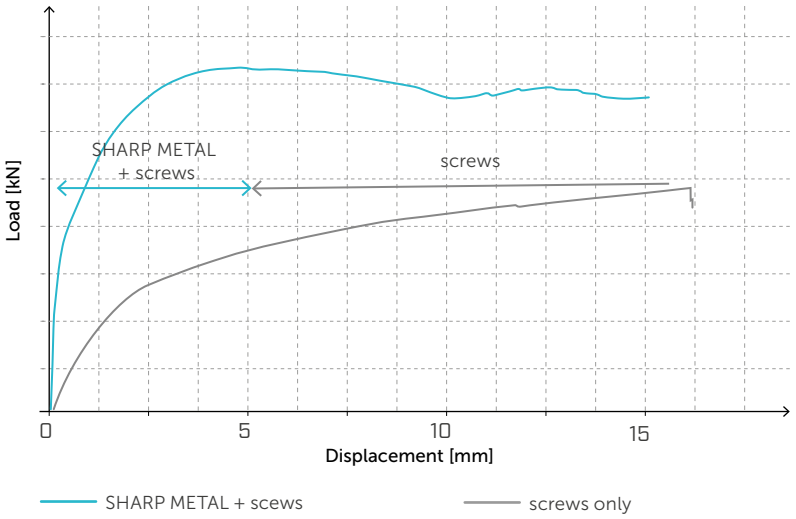

The study of the system must consider, in the case of advanced analyses, different fields of use in terms of displacement. The performance of SHARP METAL plates at low levels of displacement allows for high strength and stiffness. These features make it a good solution for coupling elements in composite sections where very high connection efficiency is desired.

In the high-displacement range, the screws provide satisfactory post-elastic behaviour due to their high ductility and strength.

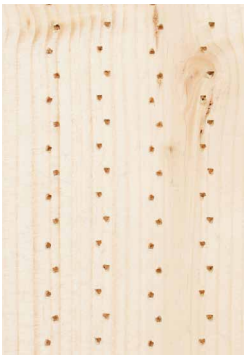

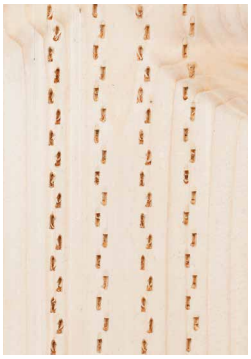

EXPERIMENTATION

The use of the SHARP METAL shear connection showed advantages during comparative experimental tests carried out on full-scale specimens under real-world conditions, both in terms of size and installation.
Tests on composite sections, where a high stiffness of the connection between the elements is usually required, showed a significant gain in terms of reduced displacements and deformations. A comparison of the results in terms of stiffness is shown in the table.

CASE STUDY: COMPARISON WITH GLUED CONNECTION

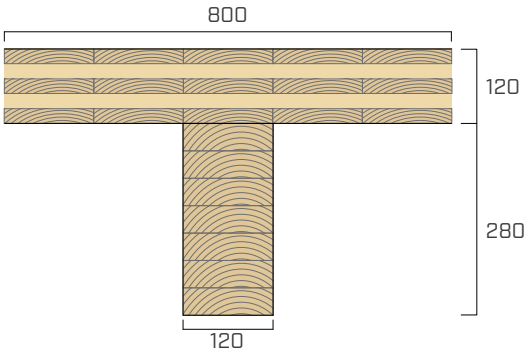

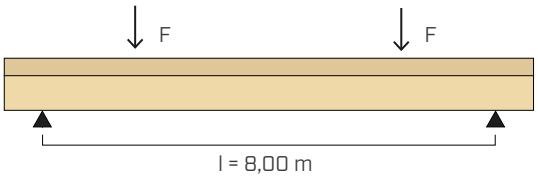

DATA	
beam lenght	8 m
CLT panel thickness	120 mm (5 layers)
beam	GL24h 120 x 280 mm

description	connection system	flexural rigidity $E_{I,ef}$	arrow v
reference test-only screws	TBS Ø8x220 mm, a = 100 mm	100%	100%
connection with screw and SHARP METAL	SHARP METAL TBS Ø8x220 mm, a = 100 mm	204%	49%
rigid connection	glueing with XEPOX	239%	42%

CASE STUDY: COMPARISON WITH CYLINDRICAL SHANK CONNECTORS

When using connectors with large diameters, extremely small spacings and minimal tolerances must often be used to ensure sufficient connection efficiency. SHARP METAL plates ensure excellent performance with small displacements, small diameters and self-drilling connectors. Below are the results of tests carried out on shear and full-scale samples.

SHEAR TESTS

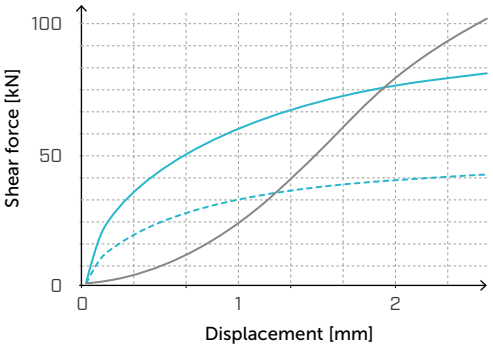

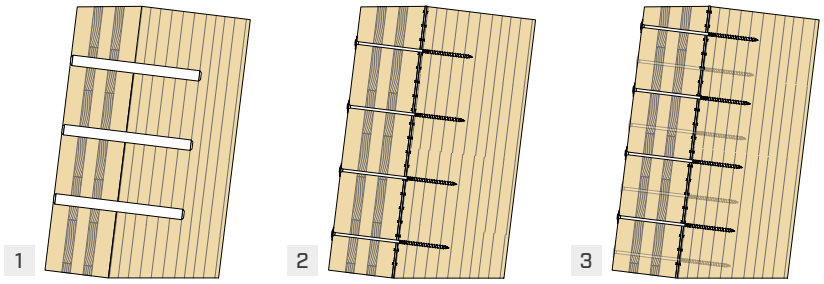

STA — SHARP METAL + TBS — **2x** SHARP METAL + TBS

	description	connection system	stiffness $E_{I,ef}$
1	**STA dowels**	6 - STA Ø20x300 mm	100%
2	**SHARP METAL + screws TBS**	SHARP METAL (1 strip l=500 mm) 4 - TBS Ø8x260 mm	75%
3	**SHARP METAL + screws TBS**	SHARP METAL (2 strips l=500 mm) 8 - TBS Ø8x260 mm	144%

BENDING TESTS

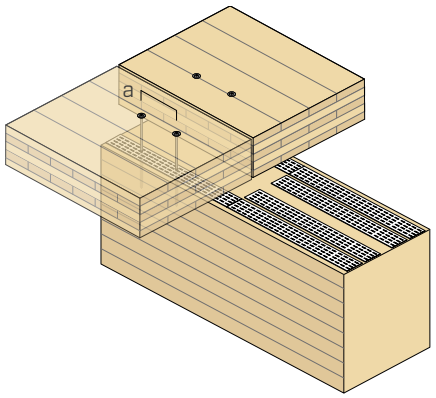

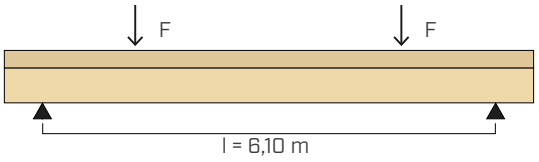

DATA	
beam lenght	6,10 m
CLT panel thickness	140 mm (5 layers)
beam	GL28h 240 x 400 mm

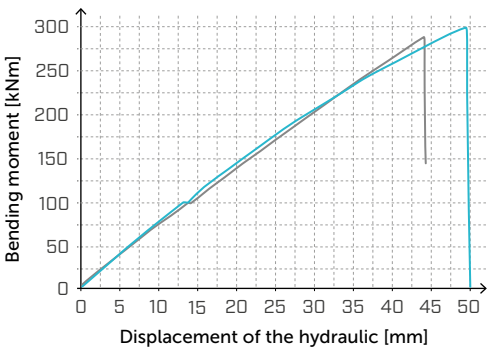

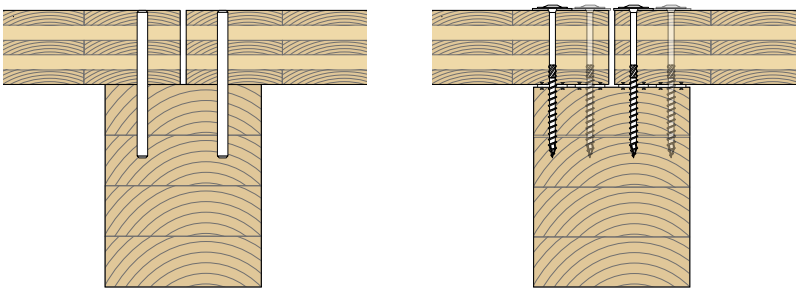

1 STA — 2 SHARP METAL + TBS

	description	connection system	flexural rigidity $E_{I,ef}$	arrow v
1	**STA dowels**	STA dowels Ø20x300 (a=120 mm/240 mm)	100%	100%
2	**SHARP METAL + screws TBS**	SHARP METAL (4 strips/2 strips) TBS Ø8x260 mm, s=150 mm	102%	97%

POST AND SLAB CONSTRUCTION SYSTEM

The SPIDER connector is the result of an idea born within the Arbeitsbereich für Holzbau of the University of Innsbruck and realised through close collaboration with Rothoblaas. The ambitious research project, co-financed by the Österreichische Forschungsförderungsgesellschaft (FFG), led to the development, for the first time in the world, of a metal connector for the construction of flat CLT floors that are placed precisely. The experimental campaign allowed the development of 10 models, suitable for different applications.
The PILLAR connector is a simplified version of the SPIDER connector, suitable for columns with smaller spacing; it can adapt with versatility to different types of applications.

SPIDER

COMPONENTS

FASTENERS

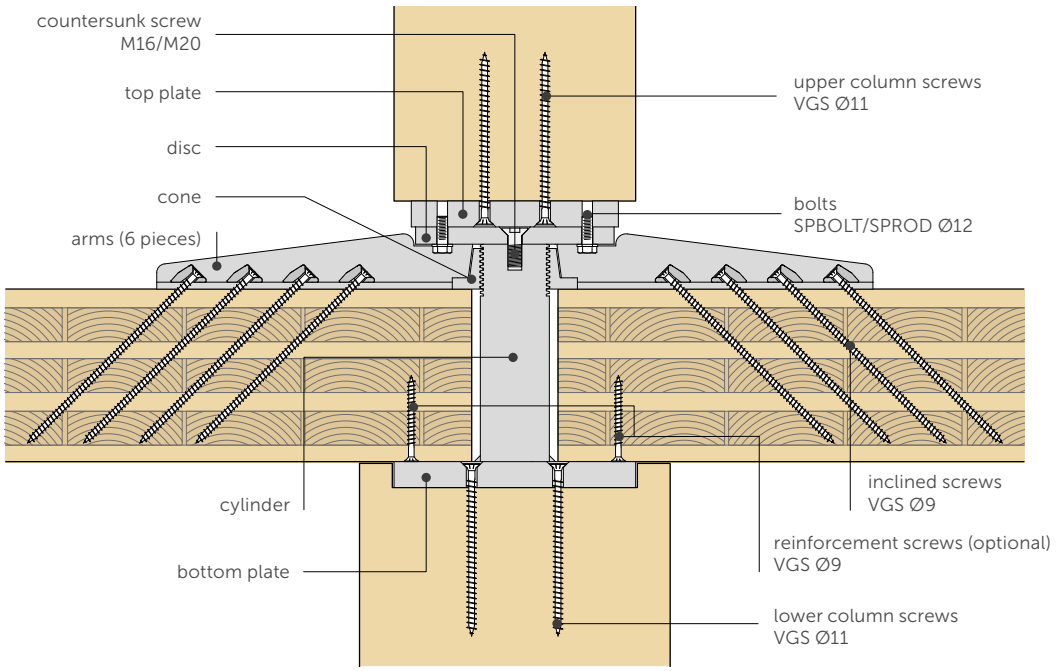

PILLAR

COMPONENTS

FASTENERS

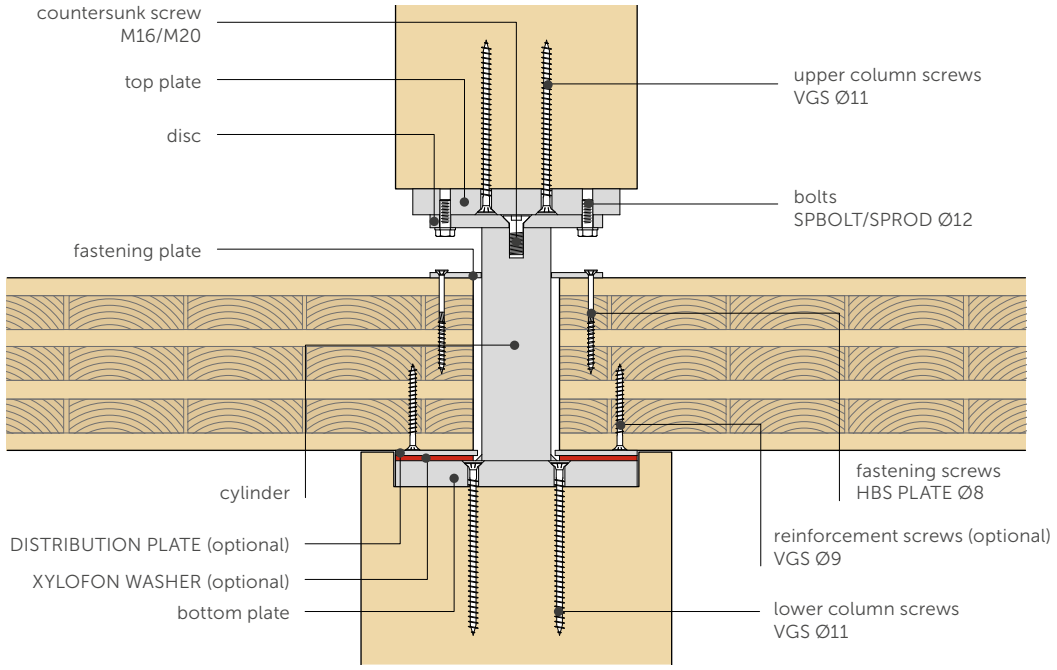

FLOOR CONSTRUCTION MODES

There are two different installation modes for the SPIDER connector and two for the PILLAR connector.
It is possible to adopt mixed solutions in which both connectors are used on the same floor, in order to optimize performance and costs.

SPIDER

PLATE FLOOR

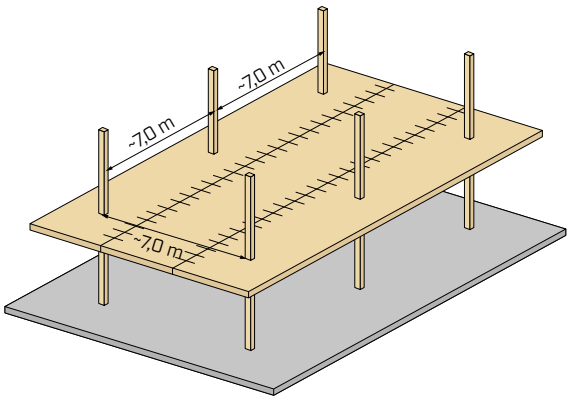

- maximum spacing between the columns
- it exploits the two-dimensional behaviour of the panel

CROSSED PANELS

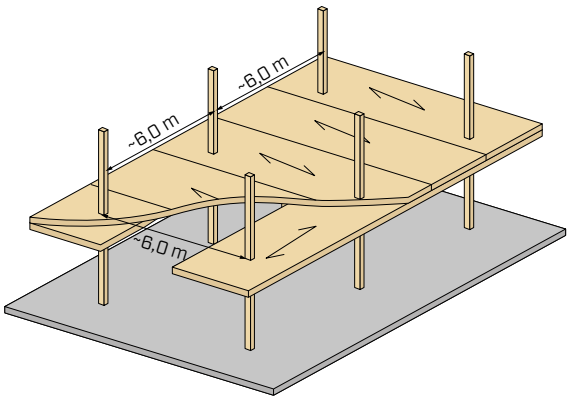

- services duct at the bottom of beam
- no moment connections

PILLAR

CENTRAL SUPPORTS

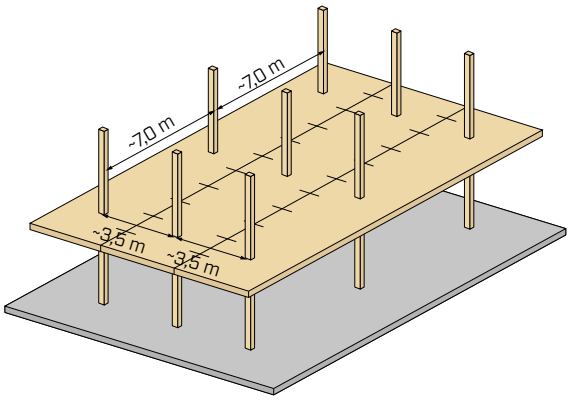

- fewer columns than the edge/angle supports
- external walls free of columns

EDGE/ANGLE SUPPORTS

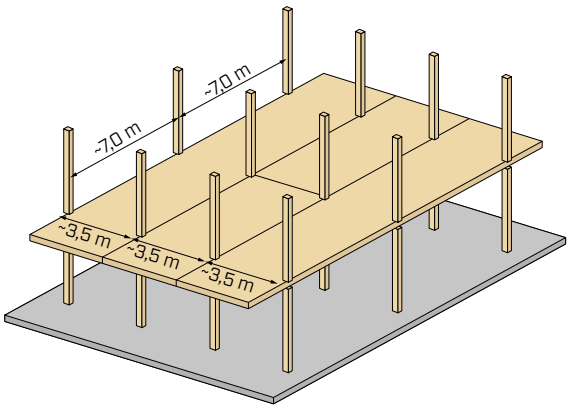

- no props
- no moment connections

SPIDER + PILLAR

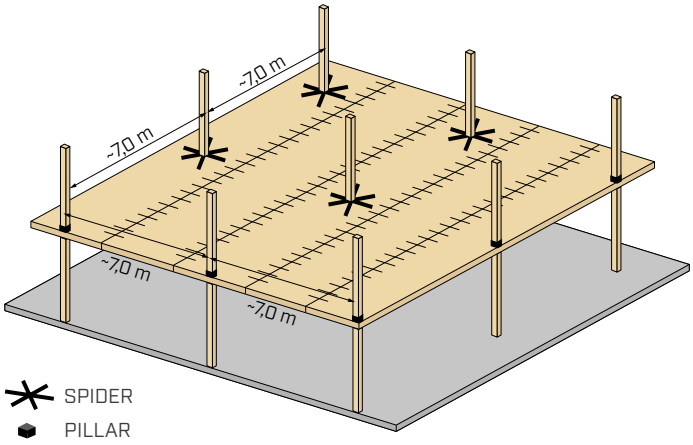

The PILLAR connector can be used together with the SPIDER connector in the less stressed supports or in the edge and angle areas, in order to optimize performance and costs.
This solution allows greater architectural freedom in the positioning of the columns in the base area.

- maximum architectural freedom in the columns positioning
- optimization of performance and costs

PREDIMENSIONING ABACUS | CONNECTOR

The abacus can be used for an initial selection of the connector to be used in each position and for each floor.
In the abacus, each column refers to a different area of influence A_i of the column in consideration, while each row refers to a different level, the levels are numbered starting from the roof floor and going downwards.
By crossing influence area and level, it is possible to determine the most suitable connector for each level. The calculation is performed with reference to a design load on the floor at the Ultimate Limit State of 8,0 kN/m^2 with average load duration class (k_{mod}=0,8). Dimensioning and verification of the timber elements must be carried out separately.

The colours of the various cells make it possible to determine the most suitable material for the construction of the column on which the SPIDER or PILLAR connector will be placed.

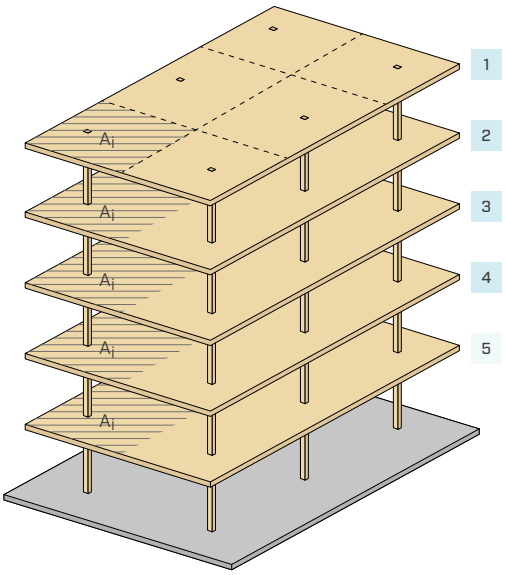

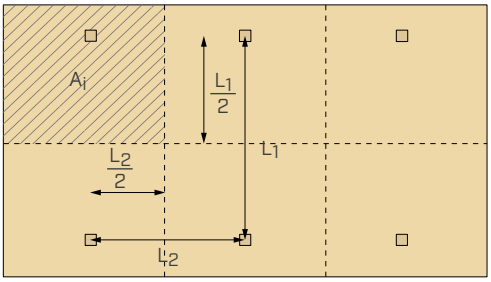

Diagram of floor areas of influence.

EXAMPLE

With reference to the 5-storey building shown in the drawing and to the column highlighted, an area of influence of about 40 m^2 is assumed. First of all, the connectors and columns to be used are the following:

Floor slab	1	SPI60S **connector** on glulam column
Floor slab	2	SPI80S **connector** on glulam column
Floor slab	3	SPI80M **connector** on glulam column
Floor slab	4	SPI80L **connector** on glulam column
Floor slab	5	SPI100S **connector** on LVL hardwood column

floor number	A_i [m^2]								
	10	15	20	25	30	35	40	45	50
1	PIL60S	PIL60S	PIL80S	PIL80M	SPI60S	SPI60S	SPI60S	SPI60S	SPI60S
2	PIL60S	PIL60S	PIL80S	PIL80M	SPI80S	SPI80S	SPI80S	SPI80S	SPI80S
3	PIL60S	PIL60S	PIL80S	PIL80M	SPI80S	SPI80M	SPI80M	SPI80L	SPI80L
4	PIL60S	PIL60S	PIL80S	PIL80M	SPI80M	SPI80L	SPI80L	SPI100S	SPI100S
5	PIL60S	PIL80S	PIL80S	PIL80M	SPI80L	SPI80L	SPI100S	SPI100S	SPI100M
6	PIL60S	PIL80S	PIL80S	PIL80L	SPI100S	SPI100S	SPI100M	SPI100M	SPI120S
7	PIL80S	PIL80S	PIL80M	PIL80L	SPI100S	SPI100M	SPI120S	SPI120S	SPI120M
8	PIL80S	PIL80M	PIL80L	PIL100M	SPI100M	SPI120S	SPI120S	SPI120M	SPI120M
9	PIL80S	PIL80M	PIL80L	PIL100M	SPI120S	SPI120S	SPI120M	SPI100L	SPI100L
10	PIL80S	PIL80L	PIL100S	PIL100M	SPI120S	SPI120M	SPI100L	SPI100L	SPI100L
11	PIL80S	PIL80L	PIL100M	PIL100M	SPI120M	SPI120M	SPI100L	SPI100L	SPI120L
12	PIL80M	PIL100S	PIL100M	PIL100M	SPI120M	SPI100L	SPI100L	SPI120L	SPI120L
13	PIL80M	PIL100S	PIL100M	PIL120S	SPI100L	SPI100L	SPI120L	SPI120L	SPI120L
14	PIL80L	PIL100M	PIL100M	PIL120S	SPI100L	SPI100L	SPI120L	SPI120L	-
15	PIL80L	PIL100M	PIL120S	PIL120M	SPI100L	SPI120L	SPI120L	-	-
16	PIL80L	PIL100M	PIL120S	PIL120M	SPI100L	SPI120L	SPI120L	-	-
17	PIL80L	PIL100M	PIL120S	PIL100L	SPI120L	SPI120L	-	-	-
18	PIL100S	PIL100M	PIL120M	PIL100L	SPI120L	SPI120L	-	-	-
19	PIL100S	PIL100M	PIL120M	PIL100L	SPI120L	-	-	-	-
20	PIL100M	PIL120S	PIL120M	PIL100L	SPI120L	-	-	-	-

glulam column LVL hardwood column steel column

PREDIMENSIONING TABLES | CONNECTOR

SPIDER CONNECTOR DESIGN STRENGTHS

MODEL	CLT floor thickness [mm]							COLUMNS
	160	180	200	220	240	280	160 + 160	
	$F_{co,up,d}$ + $F_{slab,d}$ [kN]	$F_{co,up,d}$ + $F_{slab,d}$ [kN]	$F_{co,up,d}$ + $F_{slab,d}$ [kN]	$F_{co,up,d}$ + $F_{slab,d}$ [kN]	$F_{co,up,d}$ + $F_{slab,d}$ [kN]	$F_{co,up,d}$ + $F_{slab,d}$ [kN]	$F_{co,up,d}$ + $F_{slab,d}$ [kN]	
SPI60S	345 + 296	290 + 349	240 + 401	185 + 454	135 + 506	135 + 506	245 + 394	GL32h
SPI80S	630 + 296	575 + 349	525 + 401	470 + 454	420 + 506	420 + 506	530 + 394	
SPI80M	920 + 296	865 + 349	815 + 401	760 + 454	710 + 506	710 + 506	820 + 394	
SPI80L	1215 + 296	1185 + 349	1135 + 401	1080 + 454	1030 + 506	1030 + 506	1140 + 394	
SPI100S	1515 + 296	1515 + 349	1515 + 401	1515 + 454	1475 + 506	1475 + 506	1515 + 394	LVL BEECH
SPI100M	1965 + 296	1930 + 349	1895 + 401	1855 + 454	1820 + 506	1820 + 506	2030 + 394	
SPI120S	2490 + 296	2440 + 349	2385 + 401	2335 + 454	2280 + 506	2280 + 506	2395 + 394	
SPI120M	2855 + 296	2855 + 349	2855 + 401	2855 + 454	2855 + 506	2855 + 506	2855 + 394	
SPI100L	3805 + 296	3805 + 349	3805 + 401	3805 + 454	3805 + 506	3805 + 506	3805 + 394	STEEL
SPI120L	4840 + 296	4840 + 349	4840 + 401	4840 + 454	4840 + 506	4840 + 506	4840 + 394	

PILLAR CONNECTOR DESIGN STRENGTHS

MODEL	CLT floor thickness [mm]					COLUMNS
	160	180	200	220	240	
	$F_{co,up,d}$ + $F_{slab,d}$ [kN]	$F_{co,up,d}$ + $F_{slab,d}$ [kN]	$F_{co,up,d}$ + $F_{slab,d}$ [kN]	$F_{co,up,d}$ + $F_{slab,d}$ [kN]	$F_{co,up,d}$ + $F_{slab,d}$ [kN]	
PIL60S	470 + 132	470 + 145	470 + 157	470 + 157	470 + 184	GL32h
PIL80S	815 + 167	815 + 181	815 + 195	815 + 195	815 + 225	
PIL80M	1005 + 208	990 + 223	975 + 239	975 + 239	940 + 272	
PIL80L	1325 + 208	1310 + 223	1295 + 239	1295 + 239	1265 + 272	
PIL100S	1515 + 162	1515 + 175	1515 + 190	1515 + 190	1515 + 220	LVL BEECH
PIL100M	2205 + 202	2205 + 218	2205 + 234	2205 + 234	2205 + 266	
PIL120S	2675 + 196	2660 + 211	2645 + 227	2645 + 227	2610 + 260	
PIL120M	3200 + 196	3185 + 211	3170 + 227	3170 + 227	3140 + 260	
PIL100L	4435 + 202	4435 + 218	4435 + 234	4435 + 234	4435 + 266	STEEL
PIL120L	5480 + 196	5480 + 211	5480 + 227	5480 + 227	5480 + 260	

SPIDER

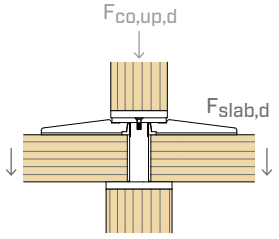

PILLAR

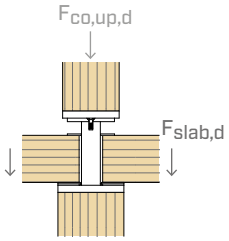

NOTES

- The strengths shown in the table refer to the design values, calculated in accordance with EN 1993-1-1, EN 1993-1-12 and EN 1995-1-1 considering an average life class load (k_{mod}=0.8).
- For safety reasons, an CLT floor height of 320 mm has been considered.
- All strength refers to the situation "with reinforcement". For the PILLAR connector, the configuration shown is the one with central support (see the specific chapter).
- The values shown in the table are to be considered as connector pre-dimensioning values. The structural verification must be carried out in accordance with the tables on the following pages. Dimensioning and verification of the timber elements must be carried out separately.

VERIFICATION UNDER FIRE CONDITIONS

Different strategies can be followed for fire design, either by designing the thickness of the timber parts (both columns and CLT panel) or by providing the structure with additional protective layers, e.g. protective panels.
Thanks to the small footprint of SPIDER and PILLAR connectors, it is possible to create thin (t) finish layers that effectively protect steel elements.

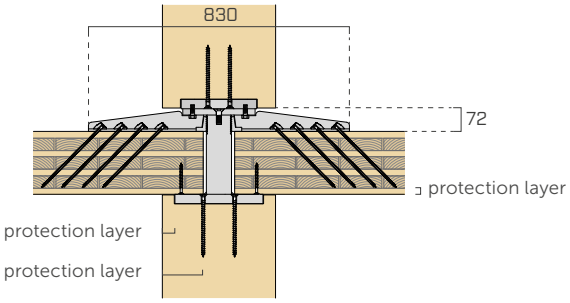

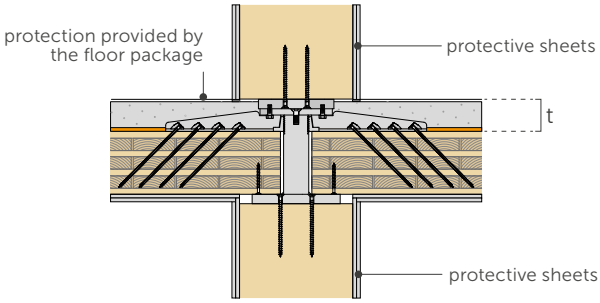

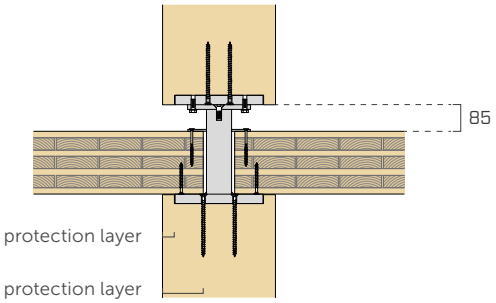

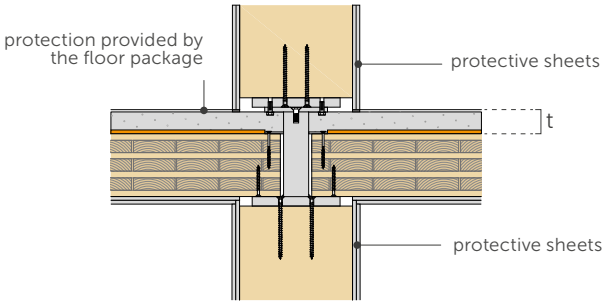

CLT PANELS PRE-DIMENSIONING

The selection of the minimum thickness of the CLT panel to meet the strength and deformation verification of the floor can be carried out using the tables below.

By choosing the spacing between columns and the accidental overload, an estimate of the most correct floor thickness can be obtained.

SIMPLY SUPPORTED CLT PANELS

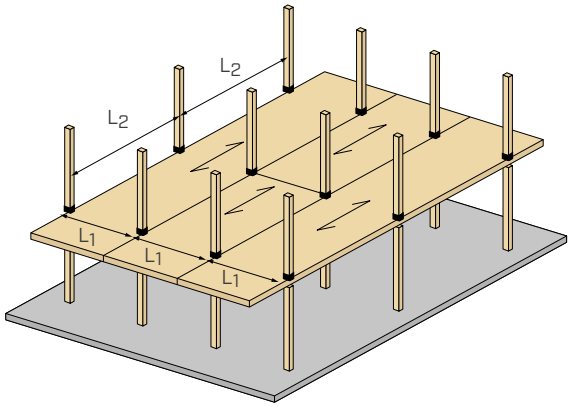

WITHOUT MOMENT CONNECTION BETWEEN PANELS

● PILLAR

deflection limit $W_{1kN} \leq 0.25$ mm

deflection limit $W_{1kN} \leq 0.50$ mm

STRUCTURAL GRID $L_1 \times L_2$ [m] - PILLAR ONLY

q_k [kN/m^2]		3,5 x 4 m		3,5 x 5 m		3,5 x 6 m		3,5 x 7 m	
		panello	L/W_{fin}	panel	L/W_{fin}	panel	L/W_{fin}	panel	L/W_{fin}
cat. A	2,0	**170 mm - 5s** 30-40-30-40-30	**280**	**180 mm - 7s** 20-40-20-20-20-40-20	**318**	**200 mm - 7s** 20-40-20-40-20-40-20	**294**	**220 mm - 7s** 30-40-30-20-30-40-30	**297**
cat. B	3,0	**180 mm - 7s** 20-40-20-20-20-40-20	**333**	**180 mm - 7s** 20-40-20-20-20-40-20	**267**	**220 mm - 7s** 30-40-30-20-30-40-30	**297**	**240 mm - 7s** 30-40-30-40-30-40-30	**299**
cat. C	4,0	**180 mm - 7s** 20-40-20-20-20-40-20	**263**	**200 mm - 7s** 20-40-20-40-20-40-20	**267**	**240 mm - 7s** 30-40-30-40-30-40-30	**285**	**260 mm - 7s** 40-40-30-40-30-40-40	**259**
cat. C	5,0	**200 mm - 7s** 20-40-20-40-20-40-20	**292**	**220 mm - 7s** 30-40-30-20-30-40-30	**250**	**260 mm - 7s** 40-40-30-40-30-40-40	**263**		

CLT PANELS PRE-DIMENSIONING

CLT PANELS WITH MOMENT CONNECTION

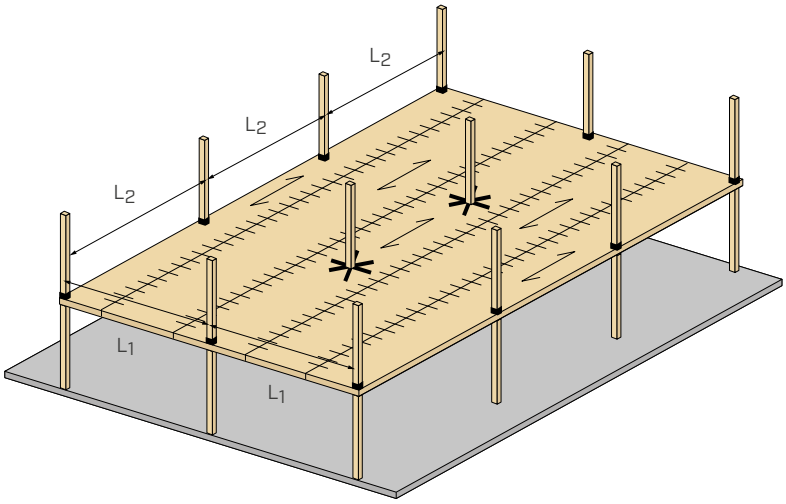

WITH MOMENT CONNECTION BETWEEN PANELS

SPIDER

PILLAR

MOMENT RESISTING JOINT

deflection limit $W_{1kN} \leq 0.25$ mm

deflection limit $W_{1kN} \leq 0.50$ mm

STRUCTURAL GRID L_1 x L_2 [m] - SPIDER AND PILLAR

q_k [kN/m^2]		4 x 4 m		4 x 5 m		4 x 6 m		5 x 5 m	
		panel	L/W_{fin}	panel	L/W_{fin}	panel	L/W_{fin}	panel	L/W_{fin}
cat. A	2,0	160mm - 5s 30-30-40-30-30	288	170 mm - 5s 30-40-30-40-30	276	200 mm - 7s 20-40-20-40-20-40-20	293	200 mm - 7s 20-40-20-40-20-40-20	318
cat. B	3,0	170 mm - 5s 30-40-30-40-30	286	180 mm - 7s 20-40-20-20-20-40-20	270	220 mm - 7s 30-40-30-20-30-40-30	321	220 mm - 7s 30-40-30-20-30-40-30	299
cat. C	4,0	180 mm - 7s 20-40-20-20-20-40-20	303	200 mm - 7s 20-40-20-40-20-40-20	272	240 mm - 7s 30-40-30-40-30-40-30	313	240 mm - 7s 30-40-30-40-30-40-30	287
cat. C	5,0	180 mm - 7s 20-40-20-20-20-40-20	260	220 mm - 7s 30-40-30-20-30-40-30	299	240 mm - 7s 30-40-30-40-30-40-30	271	240 mm - 7s 30-40-30-40-30-40-30	251

STRUCTURAL GRID L_1 x L_2 [m] - SPIDER AND PILLAR

q_k [kN/m^2]		5 x 6 m		5 x 7 m		6 x 6 m		6 x 7 m	
		panel	L/W_{fin}	panel	L/W_{fin}	panel	L/W_{fin}	panel	L/W_{fin}
cat. A	2,0	220 mm - 7s 30-40-30-20-30-40-30	305	240 mm - 7s 30-40-30-40-30-40-30	283	240 mm - 7s 30-40-30-40-30-40-30	284	260 mm - 7s 40-40-30-40-30-40-40	260
cat. B	3,0	240 mm - 7s 30-40-30-40-30-40-30	273	260 mm - 7s 40-40-30-40-30-40-40	259	260 mm - 7s 40-40-30-40-30-40-40	254	280mm - 7s 40-40-40-40-40-40-40	255
cat. C	4,0	260 mm - 7s 40-40-30-40-30-40-40	254	280mm - 7s 40-40-40-40-40-40-40	245	280mm - 7s 40-40-40-40-40-40-40	237	300mm - 8s 40-40-30-40-40-30-40-40	245
cat. C	5,0	280mm - 7s 40-40-40-40-40-40-40	251	300mm - 8s 40-40-30-40-40-30-40-40	251	300mm - 8s 40-40-30-40-40-30-40-40	250	320mm - 9s 40-30-40-30-40-30-40-30-40	286

STRUCTURAL GRID L_1 x L_2 [m] - SPIDER AND PILLAR

q_k [kN/m^2]		6,5 x 7 m		6 x 8 m		7 x 7 m		7 x 8 m	
		panel	L/W_{fin}	panel	L/W_{fin}	panel	L/W_{fin}	panel	L/W_{fin}
cat. A	2,0	280mm - 7s 40-40-40-40-40-40-40	269	280mm - 7s 40-40-40-40-40-40-40	249	280mm - 7s 40-40-40-40-40-40-40	241	300mm - 8s 40-40-30-40-40-30-40-40	254
cat. B	3,0	300mm - 8s 40-40-30-40-40-30-40-40	273						

GENERAL PRINCIPLES

- Permanent loads considered:
  - permanent load carried g_k = 1.5 kN/m^2
  - self-weight of CLT panel (density 420 kg/m^3)
- The calculation was carried out according to EN 1995-1-1 and ETA-19/0700. The load combinations for the variable load are according to EN 1991-1-1.
- The compressive strength perpendicular to the grain of the CLT panel, in the area where the panel rests on the column, must be compared with the F_{slab}, which can be found on the SPIDER and PILLAR data sheet.
- The deflection limit L/W_{fin} is derived from the quasi-permanent SLS combination according to EN 1991-1-1 and considers the point with the greatest deformation of the CLT slab. W_{fin} is the deflection at t= ∞ expressed in mm. In some configurations, the point with the greatest deformation is on the diagonal between two columns, in other cases on one of the two perpendicular spans.
- The stiffness criterion for vibration is the deflection generated by a concentrated load of 1 kN applied in the most unfavourable position. A W_{1kN} deflection of 0.25 mm is considered good behaviour, while if it is 0.50 mm it is considered acceptable. The verification of the dynamic effects of step-generated vibrations is to be decided by the designer of the structures.
- For the case of fire, connection protection strategies in accordance with EN 1995-1-1 and the relevant load combinations must be adopted. For example:
  - the top and bottom plates can be recessed into the columns, ensuring an adequate protective timber thickness.
  - in addition, on the upper side of the CLT panel, SPIDER and PILLAR can be protected by the layers of the floor finish or by specific panels.
  - the additional thickness of timber on the underside of the CLT panel, which is required in the event of a fire, is not taken into account in the above table.

DESIGN FLOW

GENERAL GEOMETRY

The thickness and stratigraphy of the CLT panel can be estimated using the pre-design tables on the previous pages, known loads and maximum spans. If different solutions are used, the ratio between the stiffness values along the two axes X and Y must be verified by maintaining a value close to a unit in order to evenly distribute the stresses in both directions.

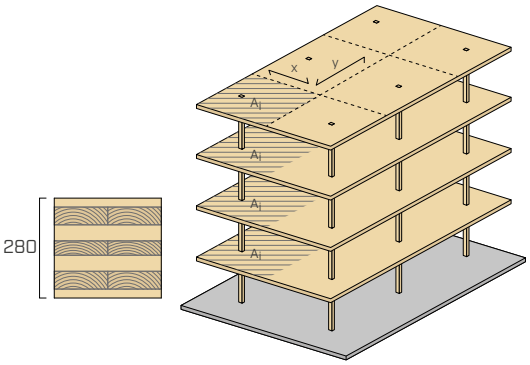

MODELLING

A deck made of CLT panels can be modelled using finite element software as a monolithic orthotropic two-dimensional plate.
The ground constraints represent the columns on which the SPIDER or PILLAR connectors will be placed.
In order to facilitate the subsequent insertion of joint lines, it is suggested to divide the panels according to the actual production width. In addition, depending on the software used, it is good practice to implement the actual column width in the model, in order to reduce peak stress effects in the support zones.

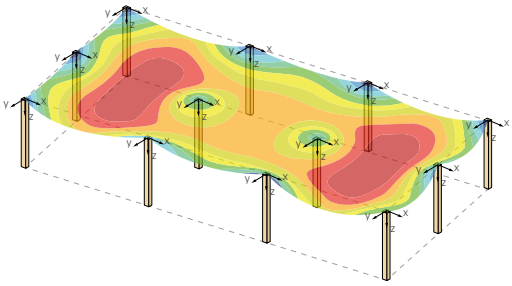

SUPPORTS AND CONSTRAINTS

In the case of SPIDER connectors, the bending stiffness of the CLT panel can be doubled around the column for a circular area of diameter D=0.8 m. This assumption, validated by experimental evidence, is due to the stiffening provided by the arms.
This increase in stiffness, however, does not apply to columns with PILLAR where there is no significant interaction between the floor panel and connector.

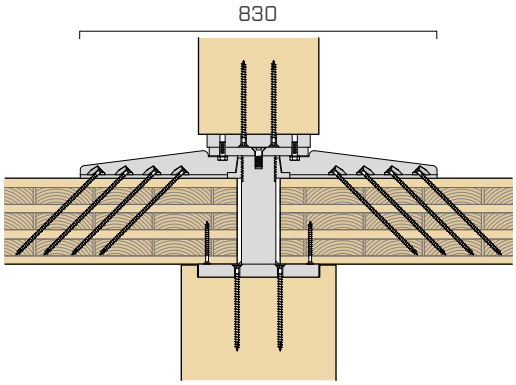

PILLAR/SPIDER VERIFICATION

The constraining reactions, for the storey type considered, represent the load transmitted from the floor to the columns.
This stress must be compared with the design strength value R_{slab} of SPIDER or PILLAR.
For the verification of the load transfer from the upper levels, the sum of the loads from the upper columns must be considered and compared with the strength $F_{co,up}$ of the chosen connector. The timber-side compression on the two upper and lower columns, i.e. $R_{timber,up}$ and $R_{timber,down}$ must also per verified.

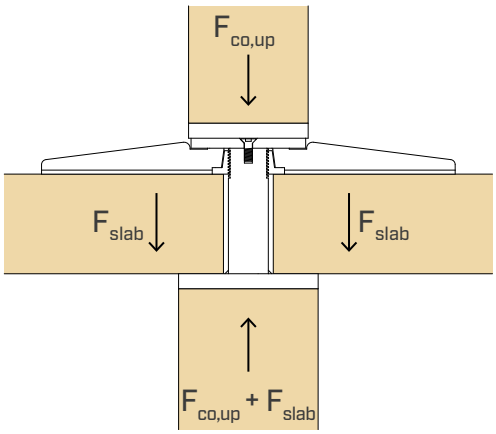

PUNCHING SHEAR VERIFICATION - ROLLING SHEAR

In the case of the PILLAR connector, the punching failure mode (rolling shear) of the CLT panel must also be verified.
The verification can be carried out by means of established models in the literature/regulations. If the stress values exceed the strength value, the panel must be reinforced by means of full thread screws (VGS or VGZ) inclined at 45°.

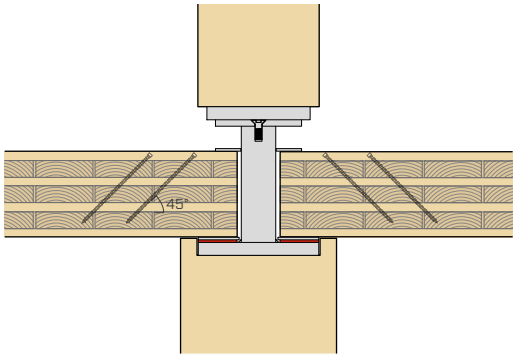

VERIFICATION OF JOINTS BETWEEN PANELS

The joint between two panels must be designed with a shear and/or moment joint system, e.g. TC FUSION (see page 440), plates glued with XEPOX (see page 136) or SHARP CLAMP (page 436). The stresses at the joint lines between CLT panels must be compared with the relative capacities.

For the verification of joints, the out-of-plane actions and in-plane components must be considered, according to the relevant load cases and combinations.
The evaluation of the flow of horizontal forces resulting from for example wind and earthquake action can be an important element of the design.

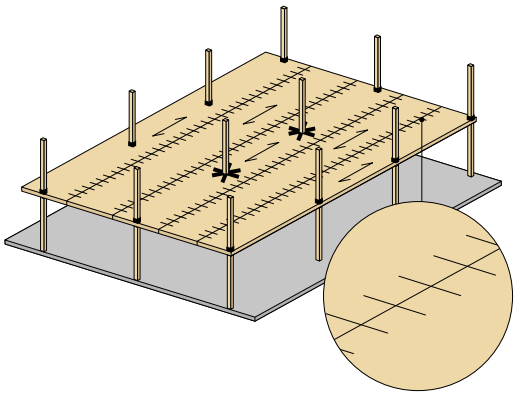

VERIFICATION OF INITIAL ASSUMPTIONS

The verification of the consistency of the initial assumptions of the monolithic plate can be assessed by modelling the stiffness of the joints between panels in the FEM model and re-performing the Limit State and Ultimate Limit State verifications.

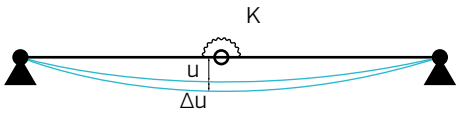

STRESSES ON CONNECTIONS BETWEEN CLT PANELS

The plate behaviour of the CLT floor can be achieved by means of special moment resisting connections. The connections, normally positioned at 1/4 of the span for the PLATE FLOOR system, are not normally subject to the maximum stress moment. In the case of the FLOOR WITH CENTRAL SUPPORTS system, the connections are positioned approximately in the middle, where the moment is however reduced due to the reduced spacing between the columns.
Vertical sections are represented in correspondence to a column in the following patterns.

PLATE FLOOR

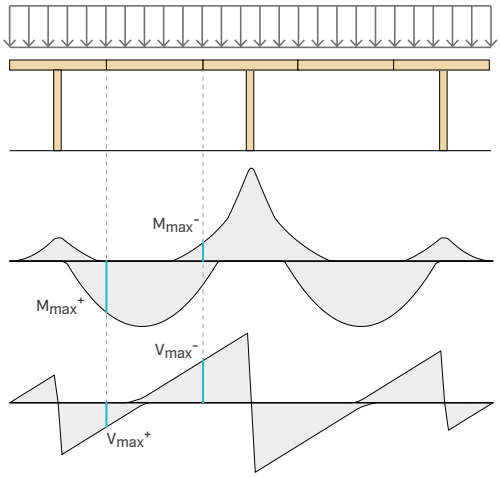

FLOOR WITH CENTRAL SUPPORTS

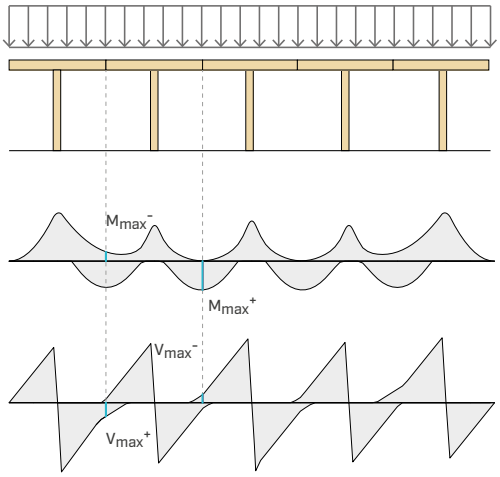

MOMENT-RESISTANT JOINTS

In order to achieve the transfer of forces and bending moments effectively, namely with sufficient stiffness, one of the following solutions can be opted for:

- hybrid timber-to-concrete system (TC-FUSION, page 440)
- joints with glued plates (XEPOX, page 136)
- innovative dry system based on sharp metal technology (SHARP CLAMP, page 436).

TC FUSION



XEPOX



SHARP CLAMP



SPIDER

CONNECTION AND REINFORCEMENT SYSTEM FOR COLUMNS AND FLOORS

MULTI-STOREY BUILDINGS

It allows the construction of multi-storey buildings with a post-and-slab structure. Certified, calculated and optimised for glulam, LVL, steel and reinforced concrete columns. New architectural and structural horizons.

COLUMN-TO-COLUMN

The steel core of the system prevents the CLT panels from being crushed and allows more than 5000 kN of vertical load to be transferred between the columns.

REINFORCEMENT SYSTEM FOR CLT

The arms of the system ensure the punching shear reinforcement of the CLT panels, allowing exceptional shear strength values. Column spacing greater than 7,0 x 7,0 m structural grid.

USA, Canada and more design values available online.



VIDEO

PATENTED

ETA-19/0700

SERVICE CLASS SC1 SC2

MATERIAL

S355 Fe/Zn12c — S355 + Fe/Zn12c carbon steel

S690 Fe/Zn12c — S690 + Fe/Zn12c carbon steel

EXTERNAL LOADS

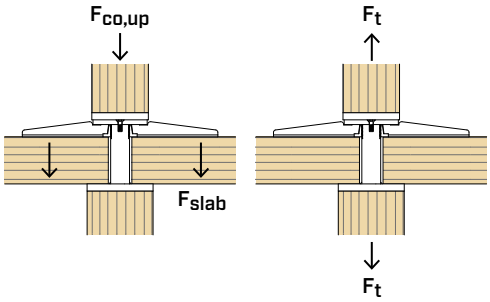

VIDEO
Scan the QR Code and watch the video on our YouTube channel



FIELDS OF USE

Multi-storey buildings with post-and-slab system. Solid timber, glulam, high density timber, CLT, LVL, steel and concrete columns.



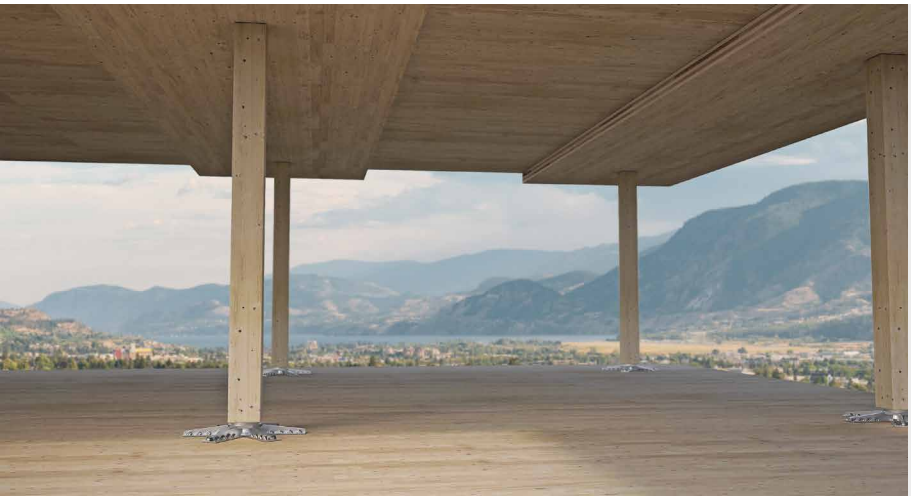

WOODEN SKYSCRAPERS

Standard connection and reinforcement system to build wooden skyscrapers with post-and-slab system. New architectural possibilities in construction.

CROSS CLT PANELS

Exceptional strength and stiffness of the structure with crossed arrangement of the CLT floors. It is possible to create free spans greater than 6,0 x 6,0 m even without the use of moment joints.

CODES AND DIMENSIONS

SPIDER CONNECTOR

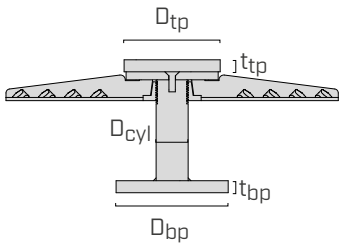

The code consists of the respective CLT panel thickness in mm (XXX = t_{CLT}).
SPI80MXXX for CLT panels with XXX = t_{CLT} = 200 mm : code **SPI80M200**.

CODE	cylinder D_{cyl}		bottom plate D_{bp} x t_{bp}		top plate D_{tp} x t_{tp}		weight		pcs
	[mm]	*[in]*	[mm]	*[in]*	[mm]	*[in]*	[kg]	*[lb]*	
SPI60SXXX[(1)]	60	*2 3/8*	200 x 30	*8 x 1 3/16*	200 x 20[(1)]	*8 x 13/16[(1)]*	52,2	*127.2*	1
SPI80SXXX	80	*3 1/8*	240 x 30	*9 1/2 x 1 3/16*	200 x 20	*8 x 13/16*	63,6	*145.5*	1
SPI80MXXX	80	*3 1/8*	280 x 30	*11 x 1 3/16*	240 x 30	*9 1/2 x 1 3/16*	73,1	*168.4*	1
SPI80LXXX	80	*3 1/8*	280 x 40	*11 x 1 9/16*	280 x 30	*11 x 1 3/16*	87,0	*199.1*	1
SPI100SXXX	100	*4*	240 x 30	*9 1/2 x 1 3/16*	240 x 20	*9 1/2 x 13/16*	74,9	*172.6*	1
SPI100MXXX	100	*4*	280 x 30	*11 x 1 3/16*	280 x 30	*11 x 1 3/16*	86,1	*199.1*	1
SPI120SXXX	120	*4 3/4*	280 x 30	*11 x 1 3/16*	280 x 30	*11 x 1 3/16*	91,6	*210.1*	1
SPI120MXXX	120	*4 3/4*	280 x 40	*11 x 1 9/16*	280 x 40	*11 x 1 9/16*	111.6	*254.2*	1
SPI100LXXX	100	*4*	240 x 20	*9 1/2 x 13/16*	not provided		64,6	*149.7*	1
SPI120LXXX	120	*4 3/4*	240 x 20	*9 1/2 x 13/16*	not provided		70.1	*164.7*	1

[(1)]SPI60S is supplied without top plate. This can be ordered separately with the code STP20020C.

XXX = t_{CLT} [mm] *[in]*							
160	180	200	220	240	280	320	320
6 1/4	*7 1/8*	*8*	*8 5/8*	*9 1/2*	*11*	*12 5/8*	*12 5/8*

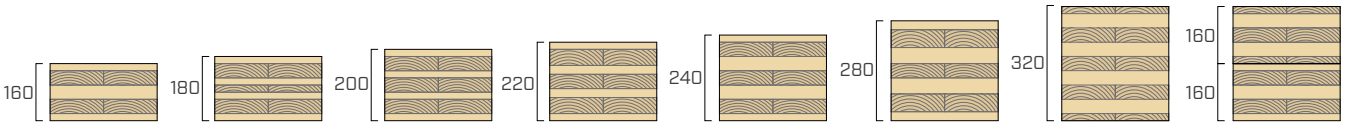

Also available for intermediate t_{CLT} thickness values not shown in the table.

Each code includes the following components:

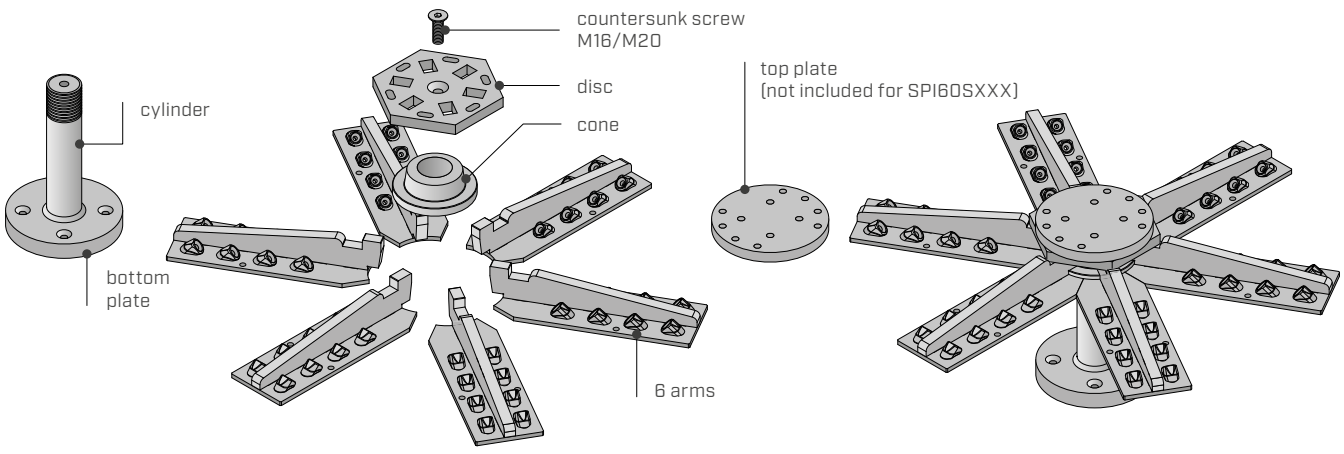

CODES AND DIMENSIONS

NUMBER OF SCREWS FOR EACH CONNECTOR

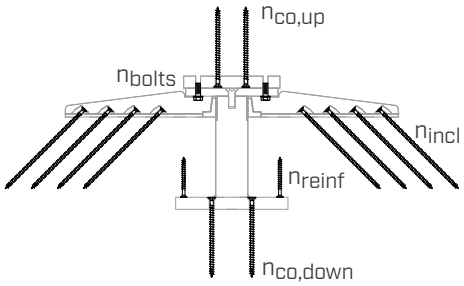

	SPI60S - SPI80S - SPI100S-SPI100L - SPI120L	SPI80M - SPI80L - SPI100M - SPI120S - SPI120M	
n_{incl}	48	48	VGS Ø9
$n_{co,up}$	4	4	VGS Ø11
$n_{co,down}$	4	4	VGS Ø11
n_{bolts}	4	4	SPBOLT1235 - SPROD1270
n_{reinf}	14	16	VGS Ø9

Screws and bolts not included in the package.
The n_{reinf} reinforcement screws are optional.

ADDITIONAL PRODUCTS - FASTENING

SCREWS

type	description		d [mm]	support	page
HBS PLATE	pan head screw	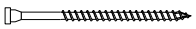	8		573
VGS	fully threaded countersunk screw	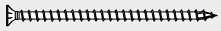	9-11		575

BOLTS - METRIC

CODE	description		d [mm]	L [mm]	SW [mm]	page
SPBOLT1235	hexagonal head bolt 8.8 DIN 933 EN 15048		M12	35	19	-
SPROD1270	threaded rod 8.8 DIN 976-1		M12	70	-	-
MUT93412	hexagonal nut class 8 DIN 934-M12		M12	-	19	178
ULS13242	DIN 125 washer					176

ASSEMBLY ACCESSORIES

CODE	description	s [mm]	pcs
SPISHIM10	levelling shim	1	20
SPISHIM20	levelling shim	2	10

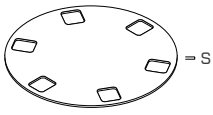

The **data sheet** complete with **structural values** is available at www.rothoblaas.com

GEOMETRY AND MATERIALS

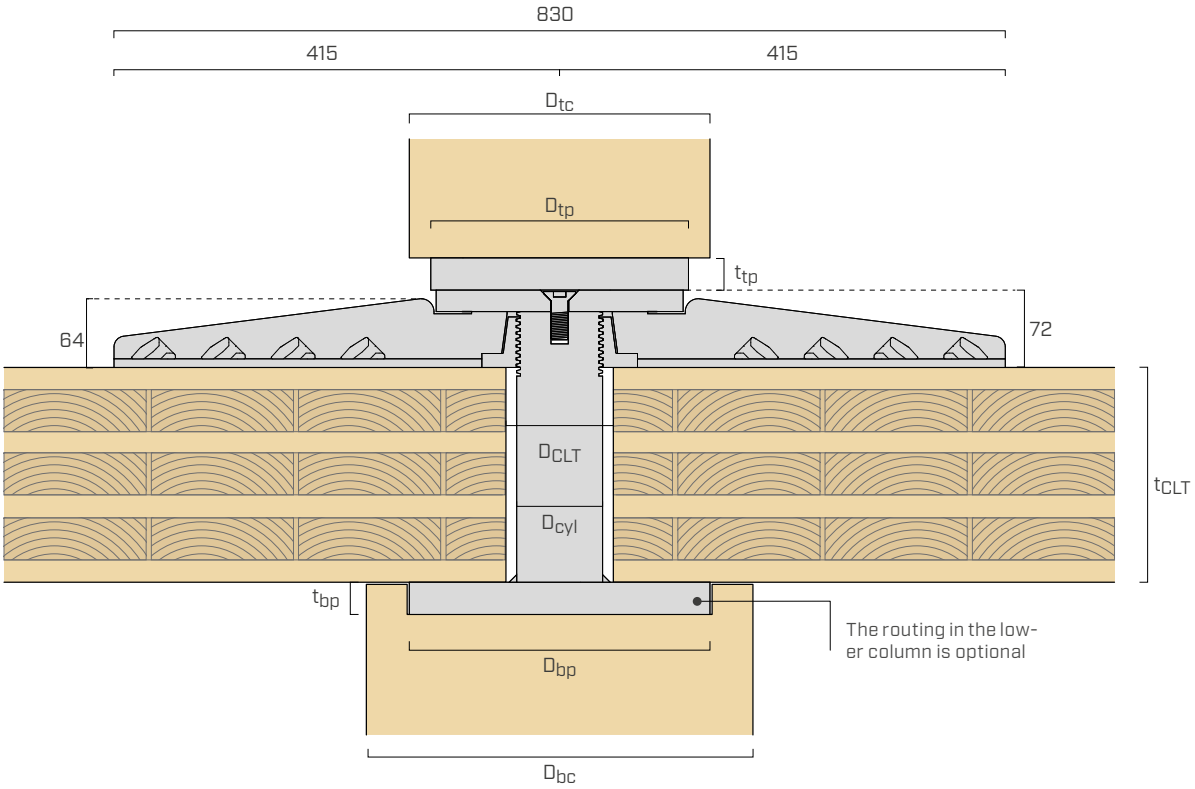

CONNECTOR

MODEL	bottom plate			cylinder		disc	top plate		
	D_{bp} x t_{bp} [mm]	shape	material	D_{cyl} [mm]	material	material	D_{tp} x t_{tp} [mm]	shape	material
SPI60S	200 x 30	○	S355	60	S355	S355	200 x 20	○(1)	S355
SPI80S	240 x 30	○	S355	80	S355	S355	200 x 20	○	S355
SPI80M	280 x 30	○	S690	80	S355	S355	240 x 30	○	S355
SPI80L	280 x 40	□	S690	80	S355	S355	280 x 30	○	S690
SPI100S	240 x 30	○	S690	100	S355	S355	240 x 20	○	S690
SPI100M	280 x 30	○	S690	100	S355	S355	280 x 30	○	S690
SPI120S	280 x 30	○	S690	120	S355	S355	280 x 30	○	S690
SPI120M	280 x 40	□	S690	120	S355	S355	280 x 40	□	S690
SPI100L	240 x 20	○	S690	100	1,7225	S690		-(2)	
SPI120L	240 x 20	○	S690	120	1,7225	S690		-(2)	

(1)SPI60S includes optional top plate.
(2)SPI100L and SPI120L provide for fastening on steel columns without using the top plate.

COLUMNS AND CLT PANELS

MODEL	upper column	lower column	CLT panel	reinforcement (optional)	
	$D_{tc,min}$ [mm]	$D_{bc,min}$ [mm]	D_{CLT} [mm]	D_{reinf} [mm]	n_{reinf}
SPI60S	200	200	80	170	14
SPI80S	200	240	100	210	14
SPI80M	240	280	100	240	16
SPI80L	280	280	100	240	16
SPI100S	240	240	120	210	14
SPI100M	280	280	120	240	16
SPI120S	280	280	140	240	16
SPI120M	280	280	140	240	16
SPI100L	240	240	120	210	14
SPI120L	240	240	140	220	14

GEOMETRY AND MATERIALS

CHARACTERISTICS OF CLT PANELS

Parameter	160 mm ≤ t_{CLT} < 200 mm	t_{CLT} ≥ 200 mm
EI_x/EI_y	0.68 - 1.46	0.84 - 1.19
$GA_{z,x}/GA_{z,y}$	0,71 - 1,40	0.76 - 1.31
Min (EI_x, EI_y)	1525 kNm^2/m	3344 kNm^2/m
Min ($GA_{z,x}$, $GA_{z,y}$)	11945 kNm/m	17708 kNm/m
Lamellas thickness	≤ 40 mm	≤ 40 mm
B/t lamellas width - thickness ratio	≥ 3,5	≥ 3,5
Minimum strength class according to EN 338	C24/T14	C24/T14
Dimensional tolerance on CLT panel thickness	± 2 mm	± 2 mm
EI_x, EI_y	Bending stiffness for x and y directions for the 1 m wide CLT panel	
$GA_{z,x}$, $GA_{z,y}$	Shear stiffness for x and y directions for the 1 m wide CLT panel	
x	Direction parallel to the upper lamellas grain	
y	Direction perpendicular to the upper lamellas grain	

CLT PANEL SCREWS

t_{CLT} [mm]	inclined screws n_{incl} [pcs - ØxL]	optional reinforcement screws n_{reinf} [pcs - ØxL]
160	48 VGS Ø9x200	VGS Ø9x100
180	48 VGS Ø9x240	VGS Ø9x100
200	48 VGS Ø9x280	VGS Ø9x100
220	48 VGS Ø9x280	VGS Ø9x120
240	48 VGS Ø9x320	VGS Ø9x120
280	48 VGS Ø9x360	VGS Ø9x140
320	48 VGS 9x400	VGS 9x160
320 (160 + 160)	48 VGS Ø9x400	VGS Ø9x160

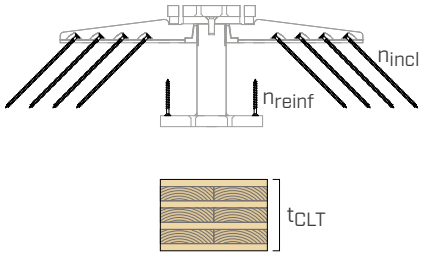

Rules for panel thickness values not included in the table:
- for inclined screws use the length provided for the panel with lower thickness;
- for the reinforcement screws use the length provided for the panel with greater thickness.

Example: for CLT panels with thickness of 250 mm we will use VGS Ø9x320 inclined screws and VGS Ø9x140 reinforcement screws.

REINFORCEMENT SCREWS (OPTIONAL)

circular bottom plate

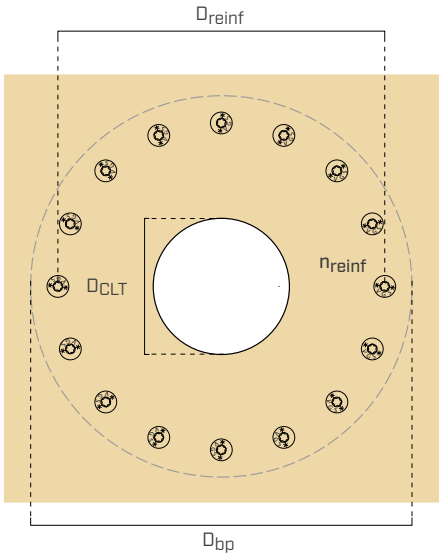

rectangular bottom plate

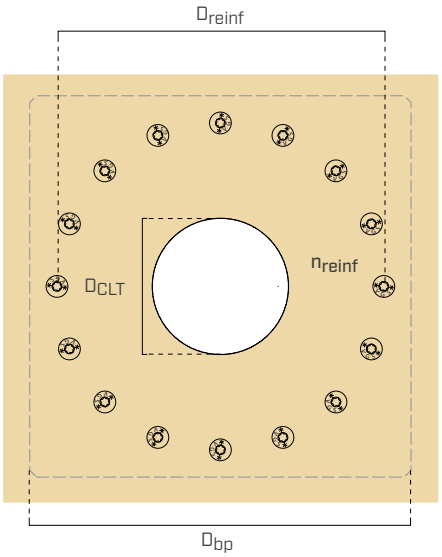

INTELLECTUAL PROPERTY

- SPIDER is protected by patent EP3.384.097B1.

VIDEO

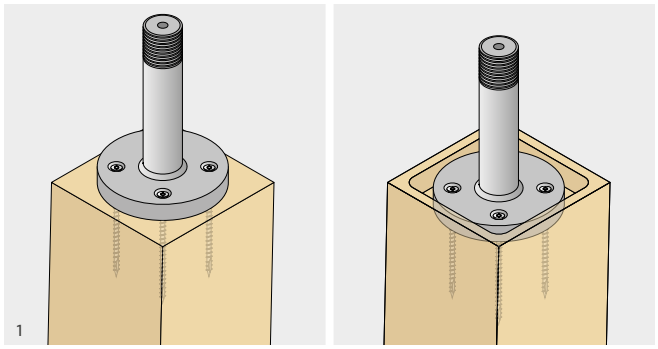

Fasten the bottom plate to the upper face of the column using the VGS Ø11 screws in accordance with the relevant installation instructions. It is possible to conceal the bottom plate in a routing prepared in the column. For installation on steel columns it is possible to use M12 countersunk head bolts. Use suitable countersunk head connectors in case of installation on reinforced concrete columns. To avoid eccentricity of the column axis line, it is essential to centre the base plate in relation to the column.

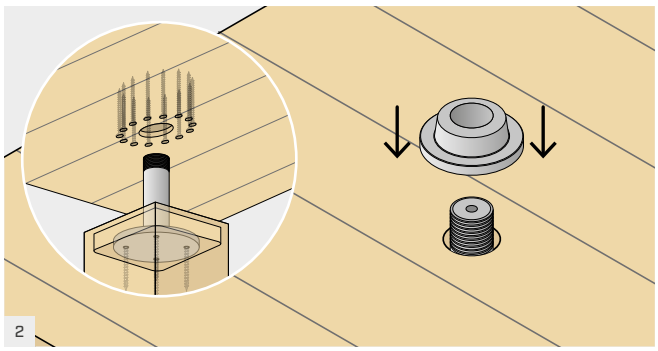

Fit the pre-drilled CLT panel with a circular hole of D_{CLT} diameter onto the cylinder. A compression reinforcement can be fitted to the bottom of the panel to increase strength. Screw the cone to the cylinder until it makes contact with the surface of the CLT panel.

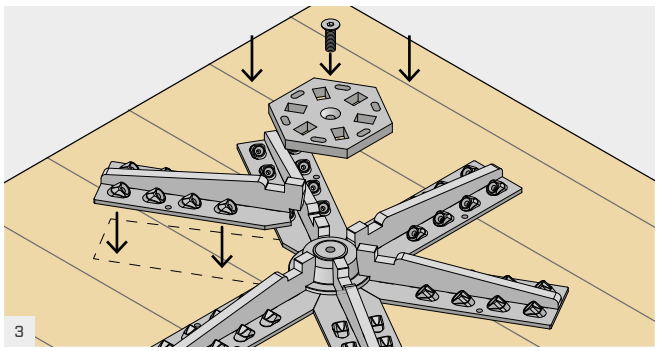

Place the 6 arms on the top surface of the CLT panel and cone. Insert the hexagonal disc in order to fit the 6 arms and fasten the countersunk head screw with a 10 or 12 mm male hexagonal wrench.

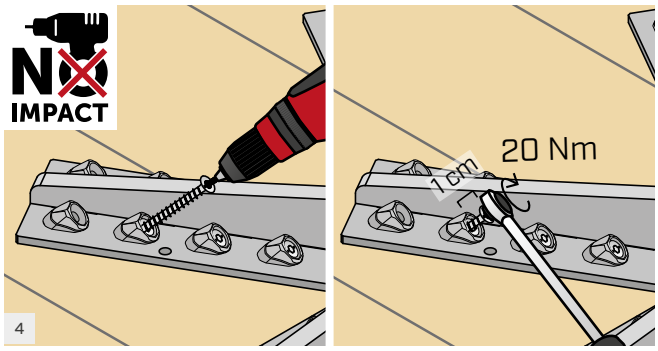

With a NON-PULSE screwdriver, insert the 48 VGS Ø9 screws inside the inclined washers, respecting the 45° insertion angle (use the JIGVGU945 pre-drilling template). Tighten by stopping about 1 cm from the washer and complete the screwing using a torque wrench by applying an insertion torque of 20 Nm.

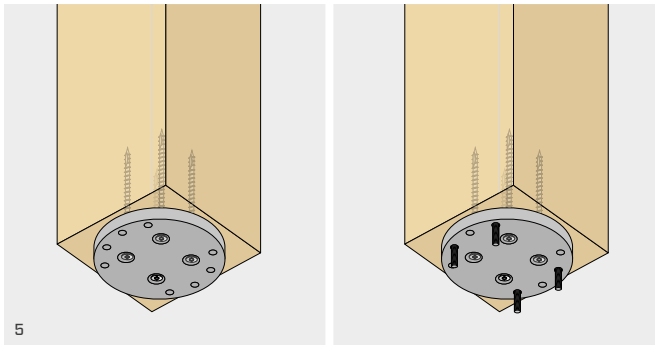

Fasten the upper plate to the lower face of the column using the VGS Ø11 screws, in accordance with the relevant installation instructions. The top plate is equipped with suitable threaded holes for fastening to the hexagonal disc. If SPRODS are used, after positioning the plate on the upper column, they must be screwed in, taking care to mark the minimum pull-through length in the upper plate.

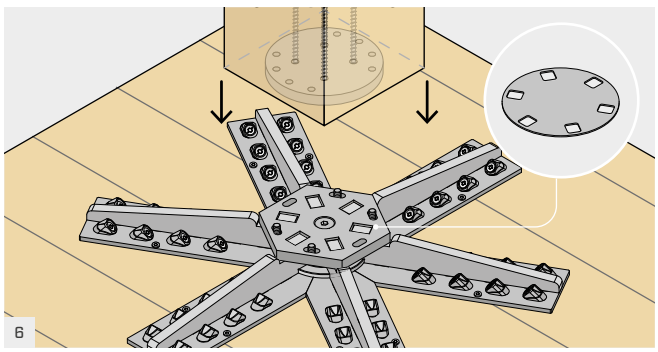

Place the upper column on the hexagonal disc and fasten it using 4 SPBOLT1235 bolts with ULS125 washer. If the option with SPRODS was chosen, the fastening is completed using a washer and a hexagonal nut. In the case of an upper steel column, the upper plate must not be used and the column must be equipped with a suitable steel plate with holes for fastening the 4 SPBOLT1235 or 4 SPROD bolts.
In the event of a misalignment of the column set-up dimension, e.g. due to cutting tolerances, it is possible to compensate for this by means of the SPISHIM10 (1mm) or SPISHIM20 (2mm) shims, or a combination of these two.

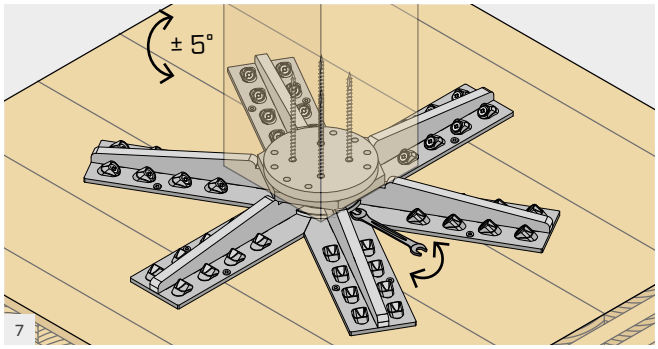

The slotted holes in the hexagonal disc allow the column to be rotated ±5°. Turn the column to the correct position and tighten the 4 SPBOLT1235 bolts or MUT hex nuts of the SPRODS using a side wrench.

SPECIAL INSTRUCTIONS FOR SPI100S - SPI100M - SPI100L - SPI120S - SPI120M - SPI120L

For SPIDER connectors with cylinder diameter D_{cyl} = 100 or 120 mm, the hexagonal disc dimension is increased.
In this case, the phase 6A must be replaced with phases 6B - 6F.

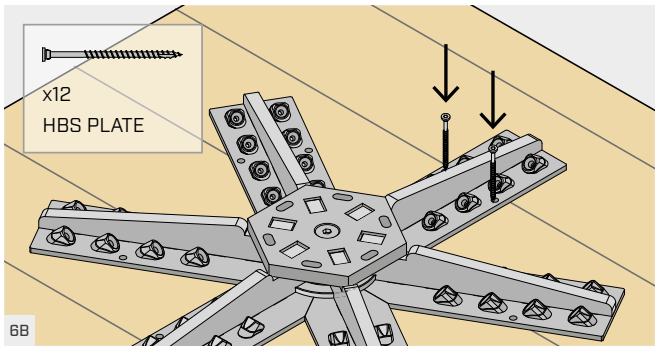

After inserting the hexagonal disc and countersunk head screw, insert 12 HBSP8120 screws into the 12 vertical holes provided in the 6 arms. These screws will hold the arms in place in the following phases.

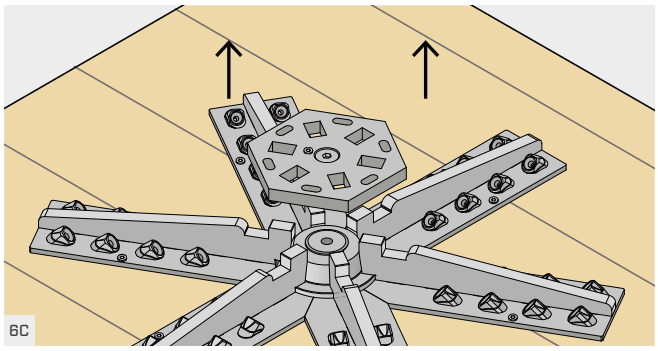

Unscrew the countersunk head screw and remove the hexagonal disc.

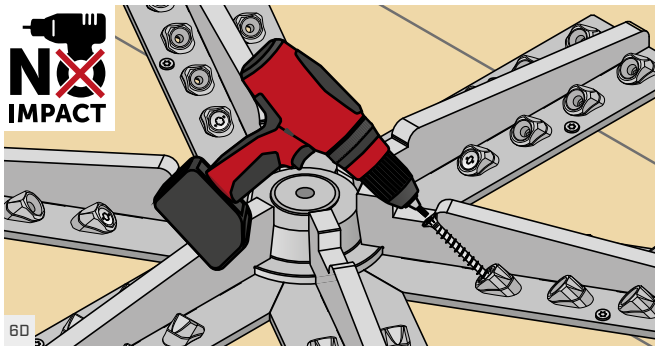

With a NON-PULSE screwdriver, insert the 12 VGS Ø9 screws inside the inclined washers closest to the cylinder, respecting the 45° insertion angle (use the JIGVGU945 pre-drilling template). Screw it in stopping about 1 cm from the washer.

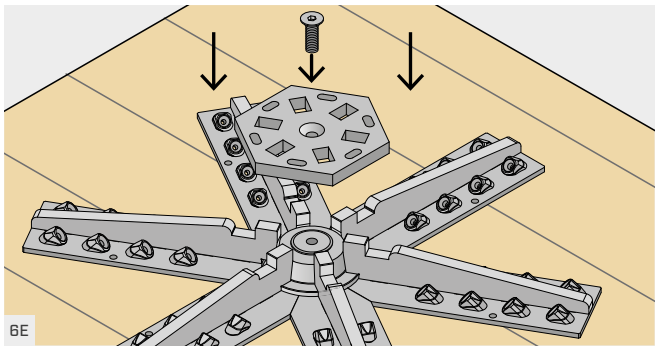

Insert the hexagonal disc and secure the countersunk head screw with a 10 or 12 mm male hexagonal wrench.

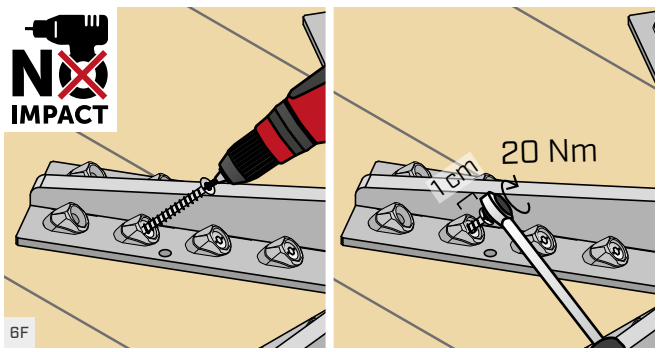

With a NON-PULSE screwdriver, insert the remaining 36 VGS Ø9 screws inside the inclined washers, respecting the 45° insertion angle (use the JIGVGU945 pre-drilling template). Tighten by stopping about 1 cm from the washer and complete the screwing using a torque wrench by applying an insertion torque of 20 Nm.

PILLAR

POST-AND-SLAB CONNECTION SYSTEM

BUILDINGS ON COLUMNS

The system allows the construction of buildings with a post-and-slab system. Distance between columns up to 3,5 x 7,0 m. inside the SPIDER system is ideal for use on columns in the corners or on the perimeter of the structural grid.

COLUMN-TO-COLUMN

The steel core of the system prevents the CLT panels from being crushed and allows more than 5000 kN of vertical load to be transferred between the columns.

FIRE SAFETY

The connector is compact, allowing it to remain within the footprint of the columns and floor, providing fire protection.

USA, Canada and more design values available online.

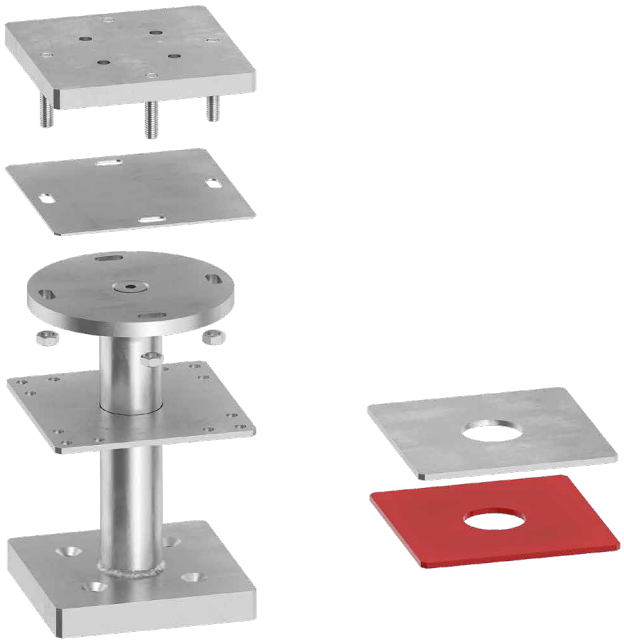

VIDEO

DESIGN REGISTERED

ETA-19/0700

SERVICE CLASS SC1 SC2

MATERIAL

S355 Fe/Zn12c — S355 + Fe/Zn12c carbon steel

S690 Fe/Zn12c — S690 + Fe/Zn12c carbon steel

EXTERNAL LOADS

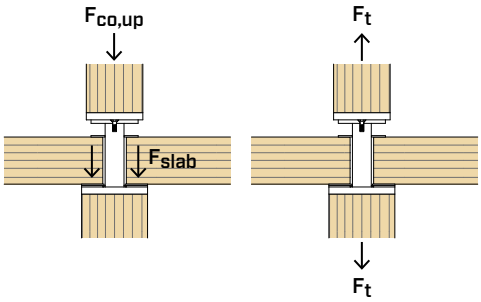

VIDEO
Scan the QR Code and watch the video on our YouTube channel



FIELDS OF USE

Multi-storey buildings with post-and-slab system. Solid timber, glulam, high density timber, CLT, LVL, steel and reinforced concrete columns.



MULTI-STOREY

Connection system for large point-to-point compression loads on timber, concrete or steel columns. Reliable and tested on buildings with over 15 storeys.

POST BASE

Versatile and certified connection also on concrete, used at the base of the timber column. With a nut and lock nut system, the height of the support can be adjusted.

CODES AND DIMENSIONS

PILLAR CONNECTOR

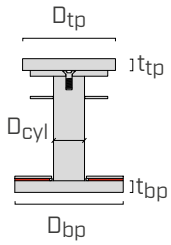

The code consists of the respective CLT panel thickness in mm (XXX = t_{CLT}).
Example: the **PIL80M** for CLT panels with XXX = t_{CLT} = 200 mm has the code **PIL80M200**.

CODE	cylinder D_{cyl}		bottom plate D_{bp} x t_{bp}		top plate D_{tp} x t_{tp}		weight		pcs
	[mm]	*[in]*	[mm]	*[in]*	[mm]	*[in]*	[kg]	*[lb]*	
PIL60SXXX	60	*2 3/8*	200 x 30	*8 x 1 3/16*	200 x 20	*13/16 x 13/16*	26,4	*58.2*	1
PIL80SXXX	80	*3 1/8*	240 x 30	*9 1/2 x 1 3/16*	200 x 30	*1 3/16 x 1 3/16*	38,2	*84.2*	1
PIL80MXXX	80	*3 1/8*	280 x 30	*11 x 1 3/16*	240 x 30	*1 3/16 x 1 3/16*	43,7	*96.3*	1
PIL80LXXX	80	*3 1/8*	280 x 40	*11 x 1 9/16*	280 x 40	*1 9/16 x 1 9/16*	64.3	*141.8*	1
PIL100SXXX	100	*4*	240 x 30	*9 1/2 x 1 3/16*	240 x 20	*13/16 x 13/16*	42,2	*93.0*	1
PIL100MXXX	100	*4*	280 x 30	*11 x 1 3/16*	280 x 30	*1 3/16 x 1 3/16*	55,5	*122.4*	1
PIL120SXXX	120	*4 3/4*	280 x 30	*11 x 1 3/16*	280 x 30	*1 3/16 x 1 3/16*	60,3	*132.9*	1
PIL120MXXX	120	*4 3/4*	280 x 40	*11 x 1 9/16*	280 x 40	*1 9/16 x 1 9/16*	72,5	*159.8*	1
PIL100LXXX	100	*4*	280 x 20	*11 x 13/16*	not provided		34,7	*76.5*	1
PIL120LXXX	120	*4 3/4*	280 x 20	*11 x 13/16*	not provided		41,8	*92.2*	1

XXX = t_{CLT} [mm] *[in]*						
160 *6 1/4*	180 *7 1/8*	200 *8*	220 *8 5/8*	240 *9 1/2*	280 *11*	320 *12 5/8*

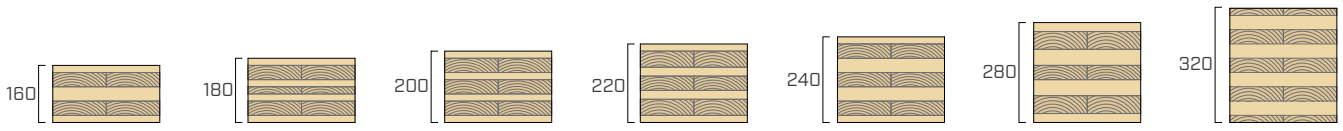

Also available for intermediate t_{CLT} thickness values not shown in the table.

Each code includes the following components:

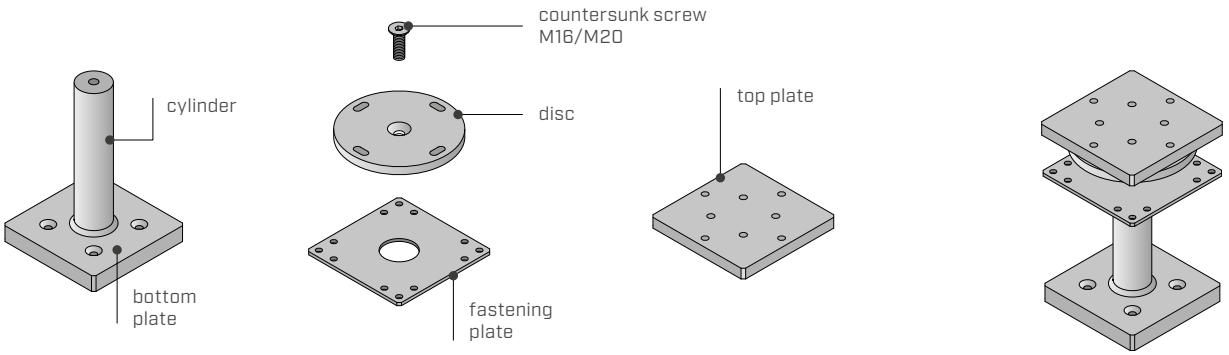

XYLOFON WASHER (optional)

CODE	suitable for	pcs
XYLWXX**60200**	PIL60S	1
XYLWXX**80240**	PIL80S	1
XYLWXX**80280**	PIL80M - PIL80L	1
XYLWXX**100240**	PIL100S	1
XYLWXX**100280**	PIL100M - PIL100L	1
XYLWXX**120280**	PIL120S - PIL120M - PIL120L	1

The code consists of the respective XYLOFON shore (35, 50, 70, 80 or 90).
XYLOFON WASHER 35 shore for PIL80M: code **XYLW3580280**

DISTRIBUTION PLATE (optional)

CODE	suitable for	pcs
SP60200	PIL60S	1
SP80240	PIL80S	1
SP80280	PIL80M - PIL80L	1
SP100240	PIL100S	1
SP100280	PIL100M - PIL100L	1
SP120280	PIL120S - PIL120M - PIL120L	1

The distribution plate is to be used only in the presence of XYLOFON WASHER + reinforcement screws.

CODES AND DIMENSIONS

NUMBER OF SCREWS FOR EACH CONNECTOR

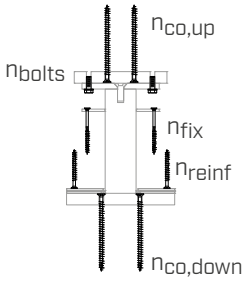

$n_{co,up}$	4	VGS Ø11
$n_{co,down}$	4	VGS Ø11
n_{bolts}	4	SPBOLT1235 - SPROD1270
n_{fix}	12	HBS PLATE Ø8
n_{reinf}	refer to the GEOMETRY AND MATERIALS section on page 432	VGS Ø9

Screws and bolts not included in the package.
The n_{reinf} reinforcement screws are optional.

ADDITIONAL PRODUCTS - FASTENING

SCREWS

type	description		d [mm]	support	page
HBS PLATE	pan head screw		8		573
VGS	fully threaded countersunk screw	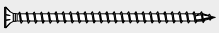	9-11		575

BOLTS - METRIC

CODE	description		d [mm]	L [mm]	SW [mm]	page
SPBOLT1235	hexagonal head bolt 8.8 DIN 933 EN 15048		M12	35	19	-
SPROD1270	threaded rod 8.8 DIN 976-1		M12	70	-	-
MUT93412	hexagonal nut class 8 DIN 934-M12		M12	-	19	178
ULS13242	DIN 125 washer		-	-	-	176

ASSEMBLY ACCESSORIES

CODE	description	s [mm]	pcs
PILSHIM10	levelling shim	1	20
PILSHIM20	levelling shim	2	10

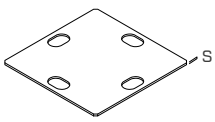

The **data sheet** complete with **structural values**
is available at www.rothoblaas.com

GEOMETRY AND MATERIALS

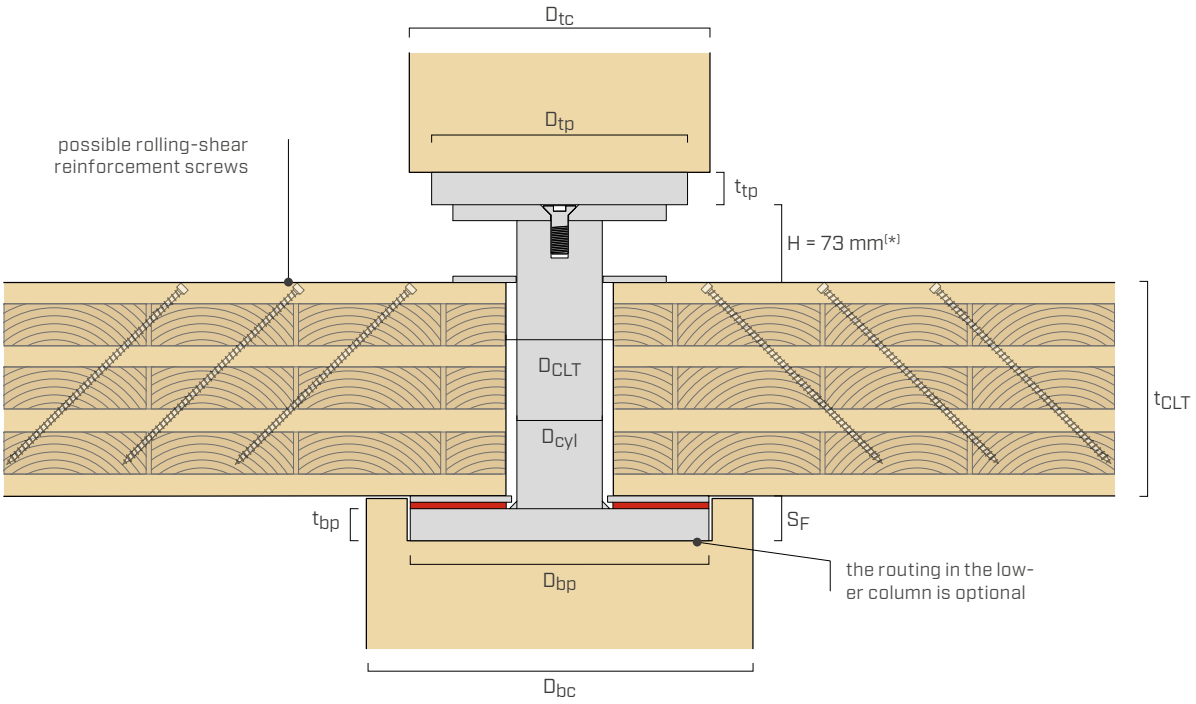

(*) In case of application without XYLOFON WASHER and distribution plate (H = 85 mm). In case of application of XYLOFON alone (H = 79 mm).

CONNECTOR

MODEL	bottom plate			cylinder		disc	top plate		
	D_{bp} x t_{bp} [mm]	shape	material	D_{cyl} [mm]	material	material	D_{tp} x t_{tp} [mm]	shape	material
PIL60S	200 x 30	☐	S355	60	S355	S355	200 x 20	☐	S355
PIL80S	240 x 30	☐	S355	80	S355	S355	200 x 30	☐	S355
PIL80M	280 x 30	☐	S690	80	S355	S355	240 x 30	☐	S690
PIL80L	280 x 40	☐	S690	80	S355	S355	280 x 40	☐	S690
PIL100S	240 x 30	☐	S690	100	S355	S355	240 x 20	☐	S690
PIL100M	280 x 30	☐	S690	100	S355	S355	280 x 30	☐	S690
PIL120S	280 x 30	☐	S690	120	S355	S355	280 x 30	☐	S690
PIL120M	280 x 40	☐	S690	120	S355	S355	280 x 40	☐	S690
PIL100L	280 x 20	☐	S690	100	1,7225	S690	-	-	-
PIL120L	280 x 20	☐	S690	120	1,7225	S690	-	-	-

PIL100L and PIL120L provide for fastening on steel columns without using the top plate.

COLUMNS AND CLT PANELS

MODEL	upper column	lower column		CLT panel	reinforcement (optional)			
	$D_{tc,min}$ [mm]	$D_{bc,min}$ [mm]	S_F* [mm]	D_{CLT} [mm]	R_{screws} [mm]	n_{reinf} central	edge	angle
PIL60S	200	200	30	80	85	14	6	2
PIL80S	200	240	30	100	105	14	6	2
PIL80M	240	280	30	100	120	16	7	3
PIL80L	280	280	40	100	120	16	7	3
PIL100S	240	240	30	120	105	14	6	2
PIL100M	280	280	30	120	120	16	7	3
PIL120S	280	280	30	140	120	16	7	3
PIL120M	280	280	40	140	120	16	7	3
PIL100L	200	280	-	120	120	16	7	3
PIL120L	200	280	-	140	120	16	7	3

* The thickness of the S_F routing in the lower column must be increased by 6 mm when using XYLOFON WASHER and by 12 mm when using XYLOFON WASHER + distribution plate.

GEOMETRY AND MATERIALS

CHARACTERISTICS OF CLT PANELS

Parameter	160 mm ≤ t_{CLT}
Lamellas thickness	≤ 40 mm
Minimum strength class according to EN 338	C24/T14

REINFORCEMENT SCREWS FOR CLT PANEL

t_{CLT} [mm]	reinforcement screws (optional) [pcs - ØxL]
160	VGS Ø9x100
180	VGS Ø9x100
200	VGS Ø9x100
220	VGS Ø9x120
240	VGS Ø9x120
280	VGS Ø9x140
320	VGS Ø9x140

For intermediate panel thickness values use the length provided for the top panel.
Example: for CLT panels with thickness of 210 mm, VGS Ø9x120 reinforcement screws will be used.

REINFORCEMENT SCREWS (OPTIONAL)

CENTRAL SUPPORT

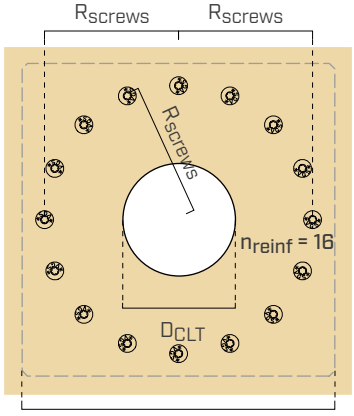

EDGE SUPPORT

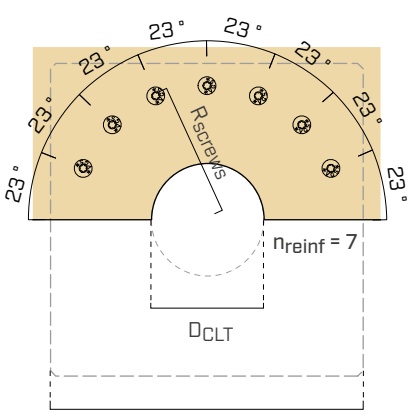

CORNER SUPPORT

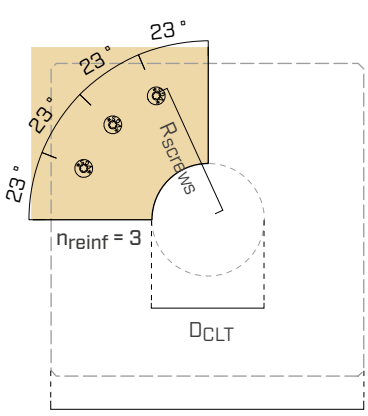

CENTRAL SUPPORT

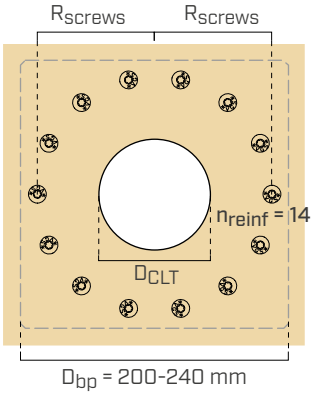

EDGE SUPPORT

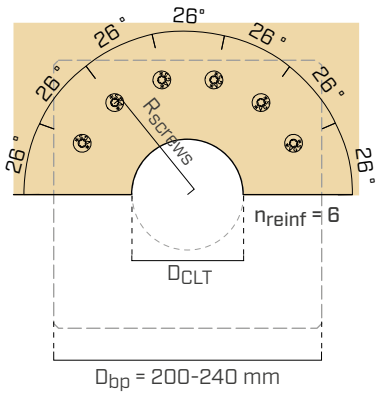

CORNER SUPPORT

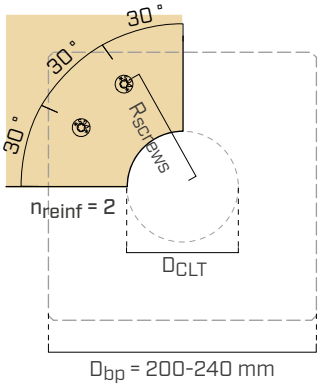

INTELLECTUAL PROPERTY

- Some PILLAR connector models are protected by the following Registered Community Designs:
  - RCD 008254353-0012;
  - RCD 008254353-0013.

MOUNTING

VIDEO

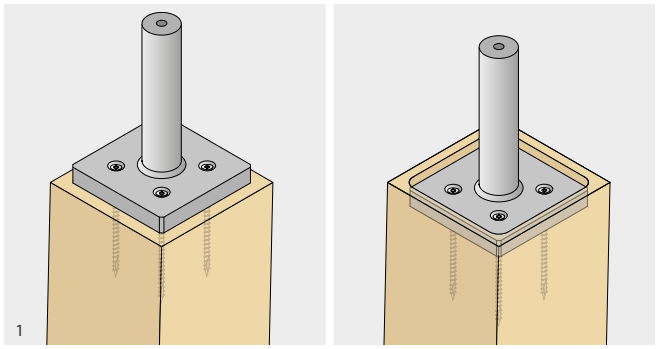

Fasten the bottom plate to the upper face of the column using the VGS Ø11 screws in accordance with the relevant installation instructions. It is possible to conceal the bottom plate in a routing prepared in the column. For installation on steel columns it is possible to use M12 countersunk head bolts. Use suitable countersunk head connectors in case of installation on reinforced concrete columns. If the cylinder and base plate are positioned horizontally, it is recommended to fix a temporary support to enable the element to be fastened on axis to the column.

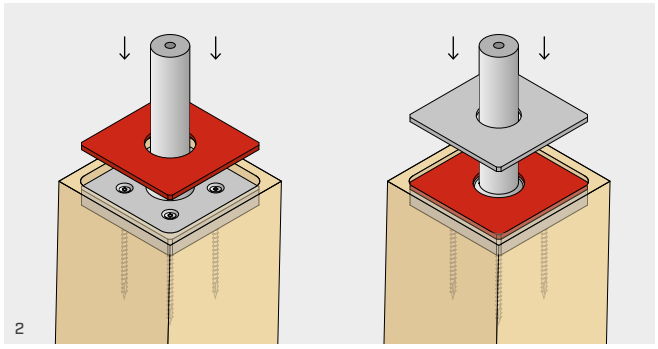

Insert the XYLOFON WASHER (optional) and/or the DISTRIBUTION PLATE (optional) on the cylinder.

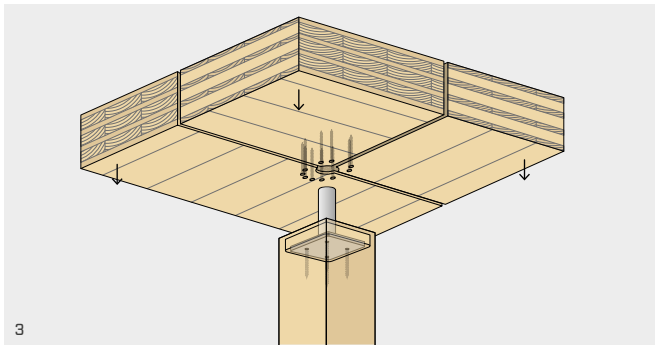

Fit pre-drilled CLT panels with a circular hole of D_{CLT} diameter onto the cylinder. A compression reinforcement can be provided to the panel bottom of beam to increase strength.

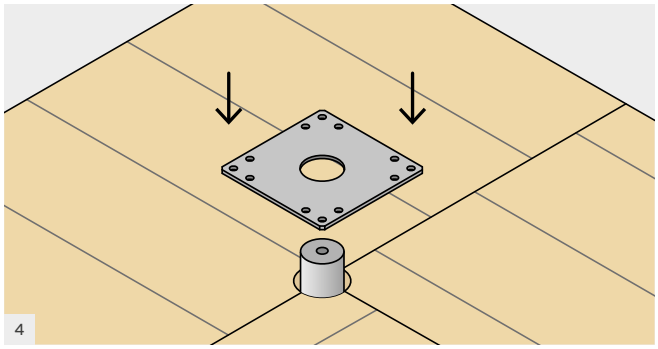

Insert the FASTENING PLATE onto the cylinder.

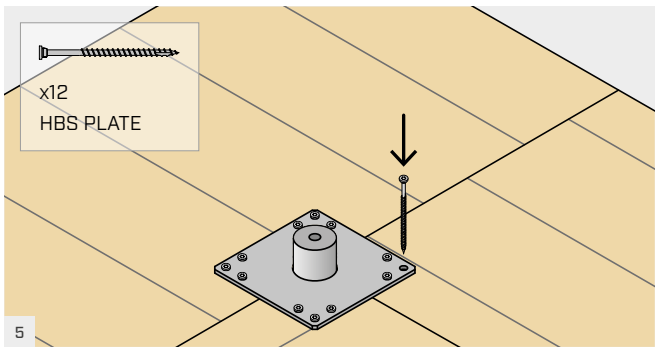

Connect the FASTENING PLATE to the CLT panels with 12 HBS PLATE 8x120 screws.

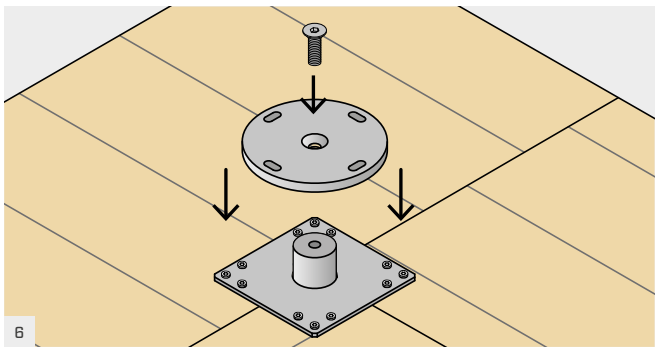

Place the DISC on the CYLINDER and fasten the countersunk head screw with a 10 or 12 mm male hexagonal wrench.

MOUNTING

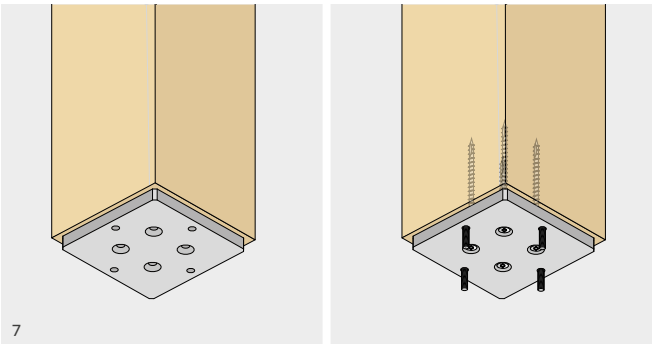

7

Fasten the upper plate to the lower face of the column using the VGS Ø11 screws, in accordance with the relevant installation instructions. The top plate is equipped with suitable threaded holes for fastening to the disc. If SPRODS are used, after positioning the plate on the upper column, they must be screwed in, taking care to mark the minimum pull-through length in the upper plate.

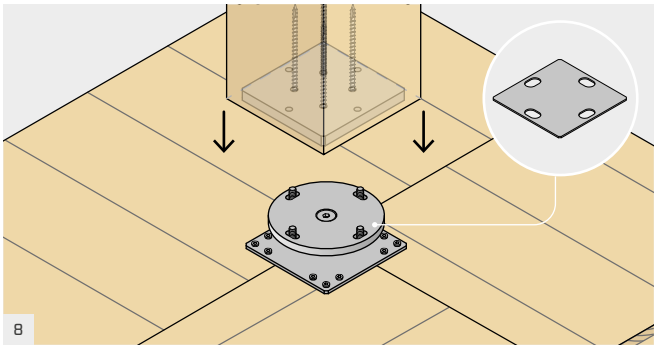

8

Place the upper column on the disc and fasten it using 4 SPBOLT1235 bolts with ULS125 washer. In the case of upper steel column, the upper plate must not be used and the column must be equipped with a suitable steel plate with holes for fastening the 4 SPBOLT1235 bolts.
In the event of a misalignment of the column set-up dimension, e.g. due to cutting tolerances, it is possible to compensate for this by means of the PILSHIM10 (1mm) or PILSHIM20 (2mm) shims, or a combination of these two.

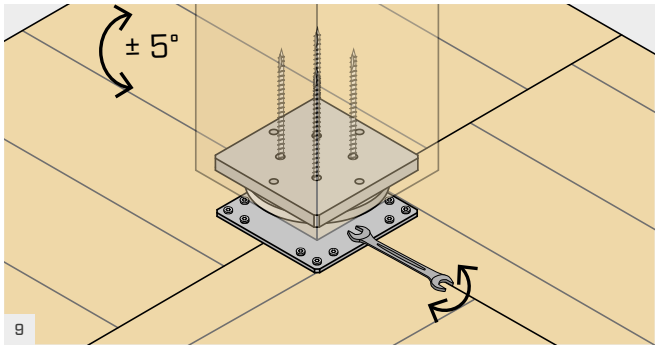

9

The slotted holes in the hexagonal disc allow the column to be rotated ±5°. Turn the column to the correct position and tighten the 4 SPBOLT1235 bolts or hex nuts of the SPRODS, using a side wrench.

CLT PANEL PRODUCTION AND INSTALLATION TOLERANCES

The connector is designed to adapt to CLT panel production and installation tolerances.

1. PRODUCTION TOLERANCE ON CLT PANEL THICKNESS

   If there is any tolerance on the thickness of the CLT floor, it is absorbed by the fastening plate (area A), which can slide on the steel cylinder.

   The total height of the PILLAR connector remains constant regardless of the CLT panel production tolerance.

2. TOLERANCE OF ±10 mm ON THE FLOOR POSITIONING (area B)

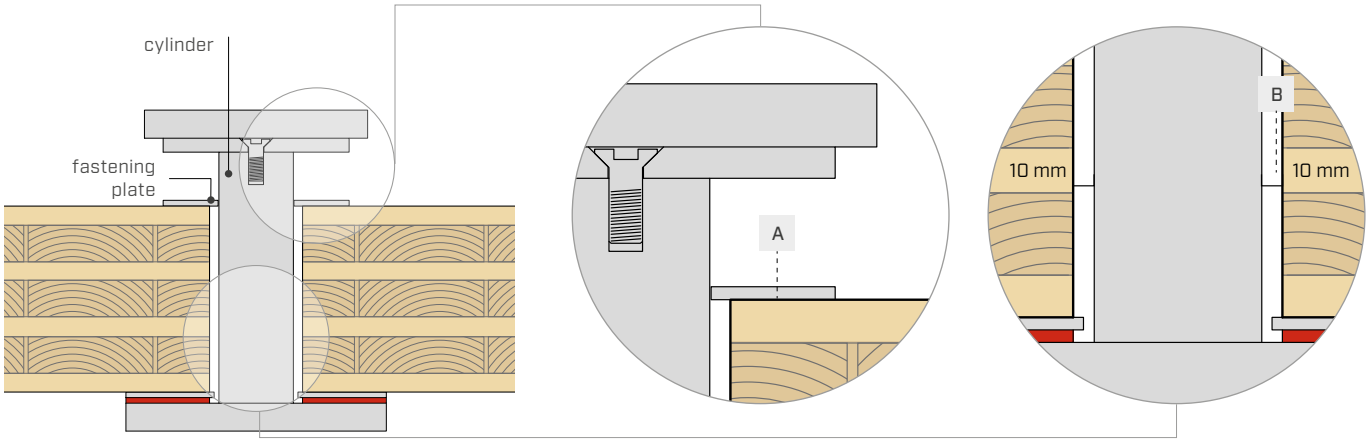

SHARP CLAMP

MOMENT CONNECTION FOR PANELS

VIDEO

IDEAL WITH SPIDER AND PILLAR

Within post-and-slab construction systems, it allows for moment-resistant connections. Dry fastening technology is not affected by humidity and temperature conditions during installation.

PARTIAL INTERLOCKING

The high stiffness of SHARP METAL technology allows moment-resistant joints for CLT or LVL panel floors.

RELIABLE

Quick to install and easily removable. Checking the correct execution of the fastening is easy, due to the possibility to inspect the connector.

SERVICE CLASS SC1 SC2

MATERIAL

S355 Fe/Zn12c — S355 + Fe/Zn12c carbon steel

EXTERNAL LOADS

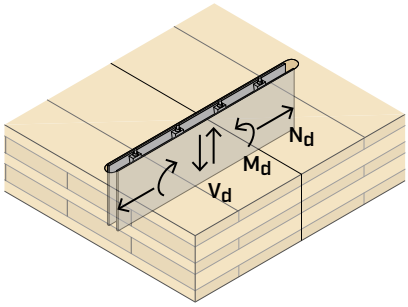

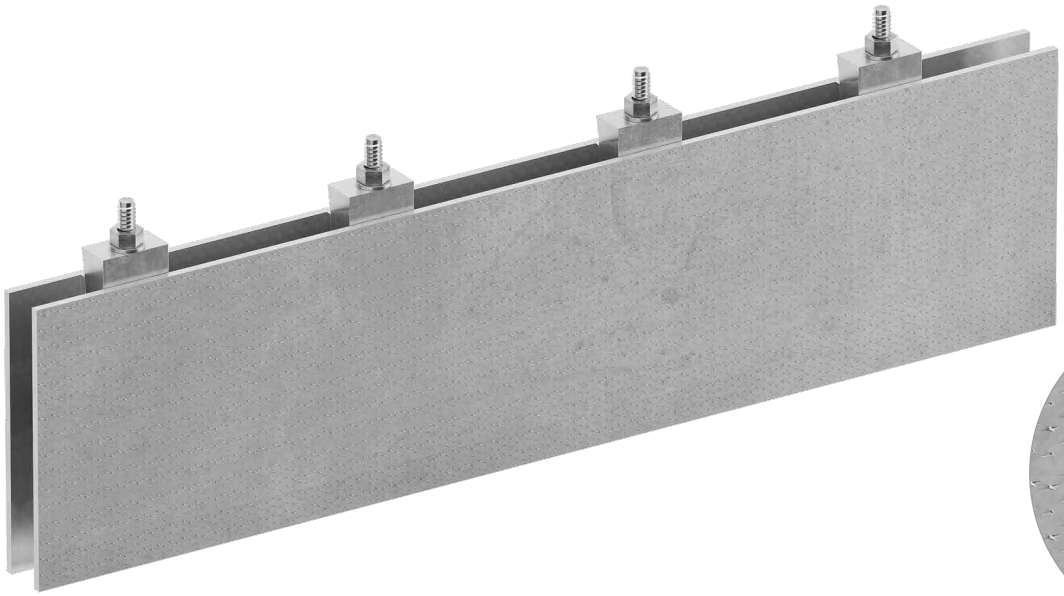

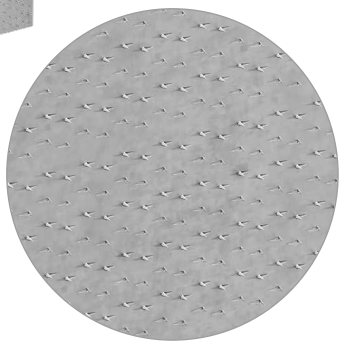



FIELDS OF USE

Moment resistant connection between CLT panels.
The high stiffness of SHARP METAL technology allows for stress-resistant connections outside the panel plane with high stiffness.

Can be applied to:

- CLT or LVL panel floors

CODES AND DIMENSIONS

SHARP CLAMP | TIMBER-TO-TIMBER JOINTS

CODE	H [mm]	L [mm]	s [mm]	*H [in]*	*L [in]*	*s [in]*	pcs
CLAMP120	120	480	6	*4 3/4*	*19*	*1/4*	1
CLAMP160	160	640	6	*6 1/4*	*25 3/16*	*1/4*	1
CLAMP200	200	800	6	*8*	*31 1/2*	*1/4*	1
CLAMP240	240	960	6	*9 1/2*	*37 13/16*	*1/4*	1

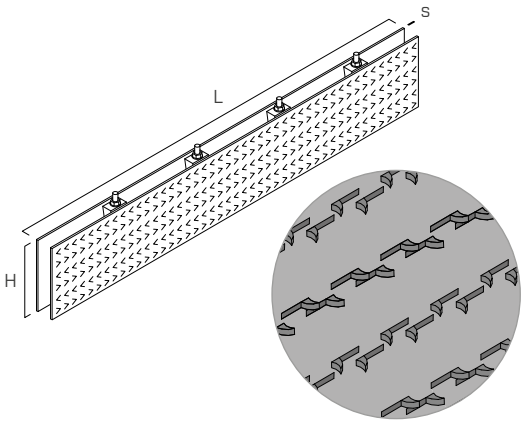

GROOVED GEOMETRY

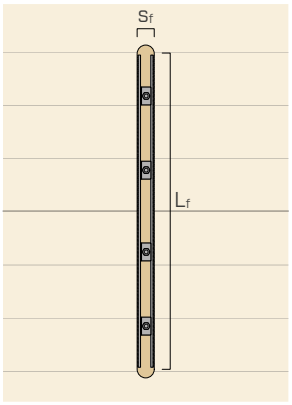

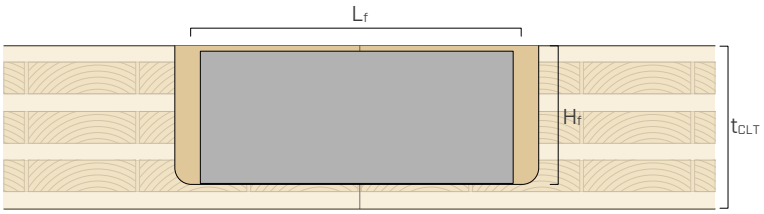

CODE	$t_{CLT,min}$ [mm]	$H_{f\,min}$ [mm]	$L_{f\,min}$ [mm]	s_f [mm]	*$t_{CLT,min}$ [in]*	*$H_{f\,min}$ [in]*	*$L_{f\,min}$ [in]*	*s_f [in]*
CLAMP120	140	130	500	45	*5 1/2*	*5 1/8*	*19 3/4*	*1 3/4*
CLAMP160	180	170	660	45	*7 1/8*	*6 3/4*	*26*	*1 3/4*
CLAMP200	220	210	820	45	*8 5/8*	*8 1/4*	*32 5/16*	*1 3/4*
CLAMP240	260	250	980	45	*10 1/4*	*10*	*38 9/16*	*1 3/4*

MOMENT JOINT WITH PLATES

The innovative SHARP CLAMP technology is based on the exclusive use of SHARP METAL plates to create semi-rigid joints between CLT panels. The semi-rigid connection can transfer both shear forces and bending moments by exploiting a stress distribution along the panel thickness.
The high strength combined with the stiffness of the system makes it a valid alternative to glued joints, simplifying application and control.
The system is not significantly affected by the adherence condition on the surface and can be applied in wider temperature and humidity ranges than resin systems.

Furthermore, the application is very effective in extreme climates, as it does not require preparation, taping or sealing, and no curing time.

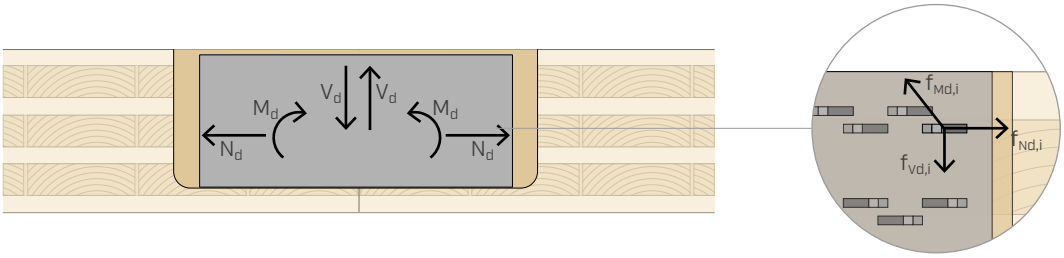

MOUNTING

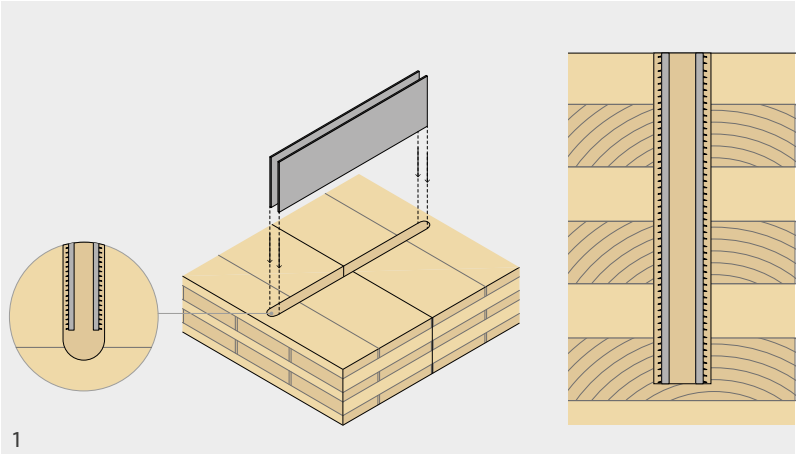

1

The first fundamental operation is to check the alignment of the panels and the processing that makes the joint.
In order to ensure proper functioning of the SHARP CLAMP connection, it is essential that the inner surfaces of the routing are parallel and flat. In addition, if the pocket is not through, proper cleaning of the bottom of the pocket is prescribed to avoid obstacles to full penetration of the hooks.

The plates that make up the system must be inserted inside the routing and positioned centrally at the joint line.

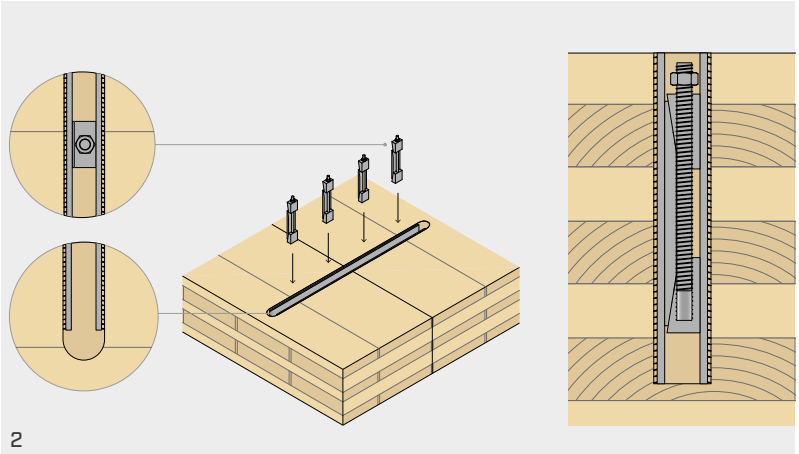

2

After positioning the plates, the wedges are inserted, which, by means of a horizontal shift, allow the hooks to be attached.

These elements must be arranged symmetrically and with even spacing to ensure constant pressure along the length of the plates.

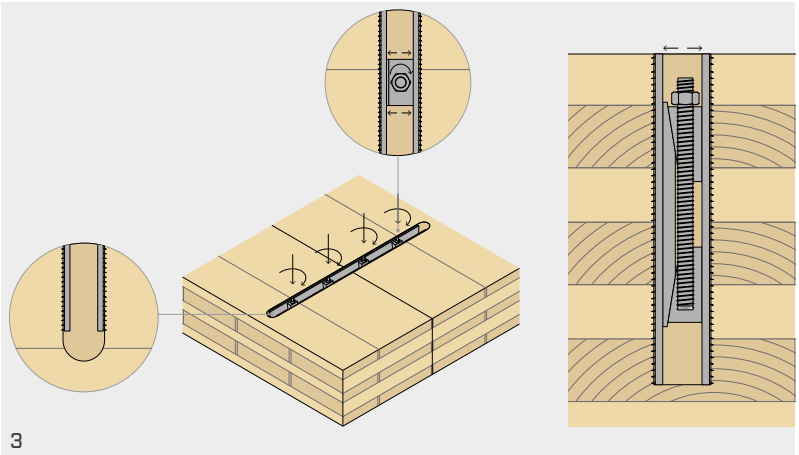

3

The plates fastening to the timber surfaces is achieved by tightening the nut so that the lower wedge is brought closer to the upper wedge, creating the expansion effect of the system. To ensure correct operation, the bolts must be tightened in sequence, working in successive increments so that the pressure on each portion is even.

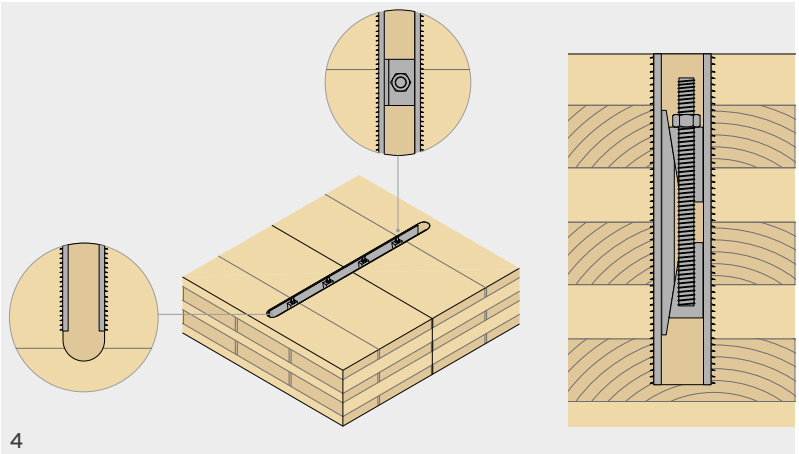

4

The last step involves verifying the correct installation of the SHARP CLAMP plates. This operation consists of checking the hook penetration and its homogeneity along the entire length of the plate and in the transverse direction. This operation is extremely simple, since it consists of checking visually or with simple instruments the distance between the steel plate and the timber.



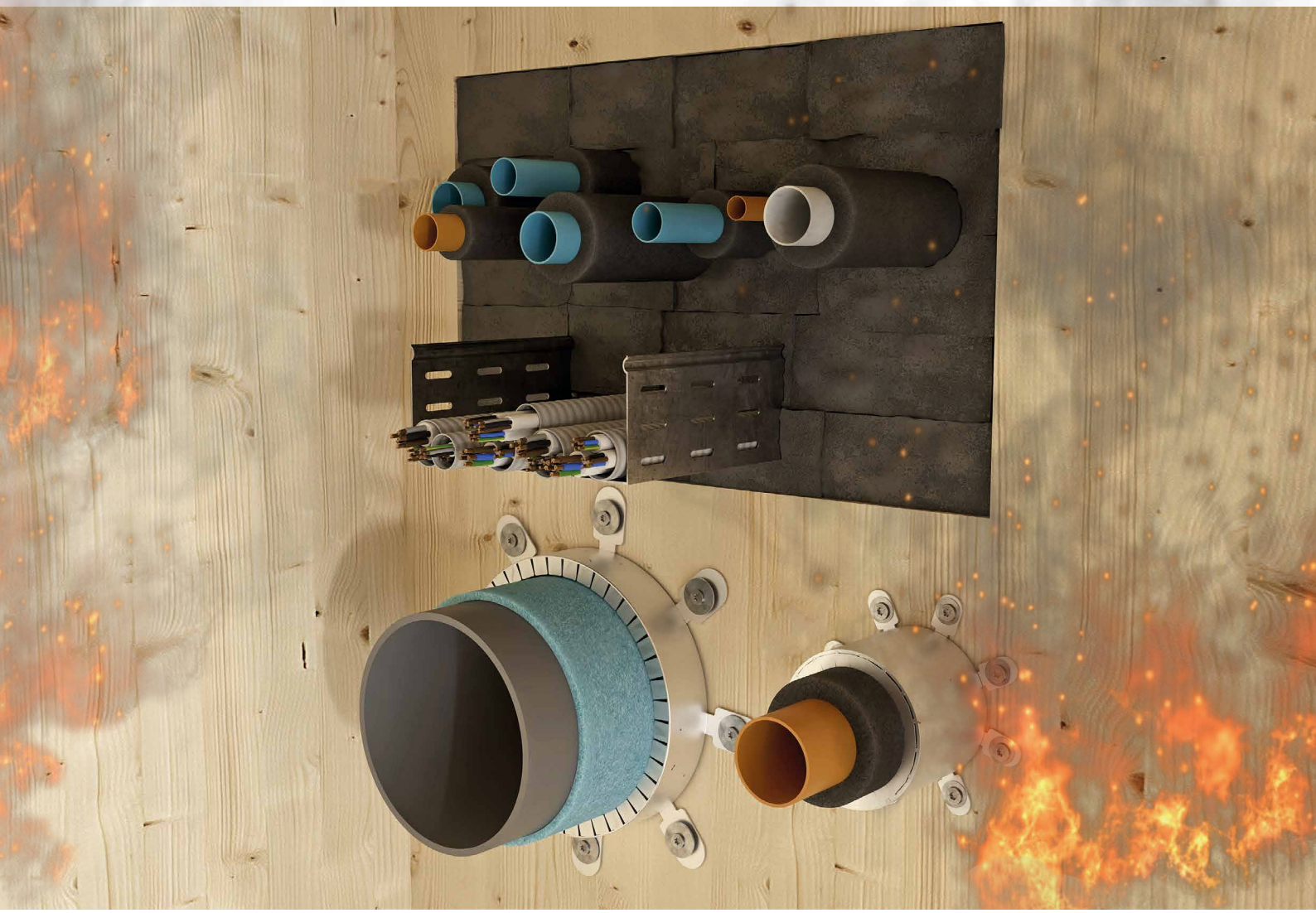

Fire-prevention penetrations in timber structures

The choice of the best passive protection for system penetrations depends on the installation context.

Discover all the best solutions in the sealants catalogue

rothoblaas.com

rothoblaas

Solutions for Building Technology

TC FUSION TIMBER-CONCRETE FUSION

VIDEO CALCULATION TOOL

CE ETA-22/0806

TIMBER-TO-CONCRETE JOINT SYSTEM

HYBRID STRUCTURES

The VGS, VGZ and RTR full-thread connectors are now certified for any type of application where a timber element (wall, ceiling, etc.) must transmit stresses to a concrete element (bracing core, foundation, etc.).

PREFABRICATION

The concrete prefabrication combines with timber prefabrication: the reinforcing bars inserted into the concrete casting accommodate the full thread timber connectors; the supplementary casting carried out after installing the timber components completes the connection.

POST AND SLAB SYSTEMS

It allows connections between CLT panels with exceptional strength and stiffness for shear, bending moment and axial stress. It is the natural complement to the SPIDER and PILLAR systems.

USA, Canada and more design values available online.



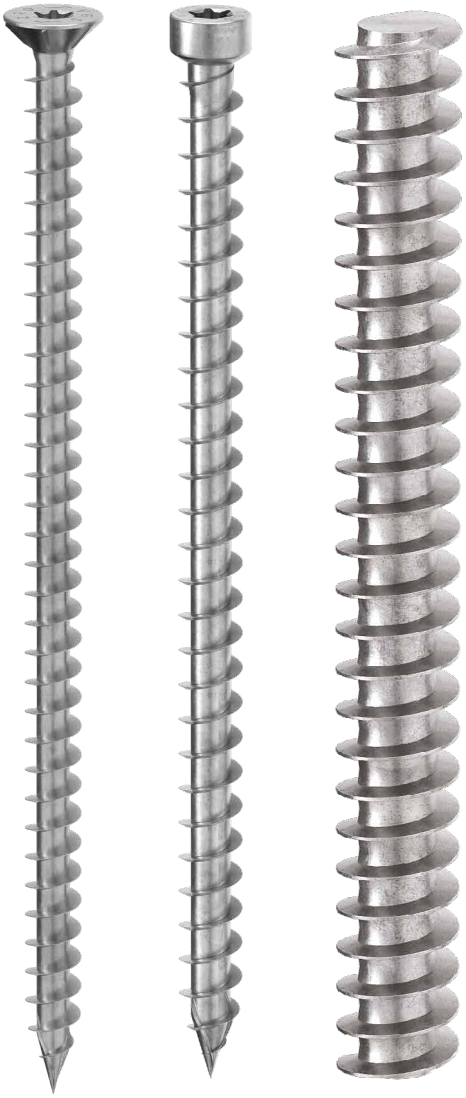

VGS VGZ RTR

CHARACTERISTICS

FOCUS	timber-to-concrete joints with resistance in all directions
DIAMETER	screws Ø9 mm, Ø11 mm, Ø13 mm, Ø16 mm
FASTENERS	VGS, VGZ and RTR
CERTIFICATION	CE marking in accordance with ETA-22/0806

VIDEO

Scan the QR Code and watch the video on our YouTube channel

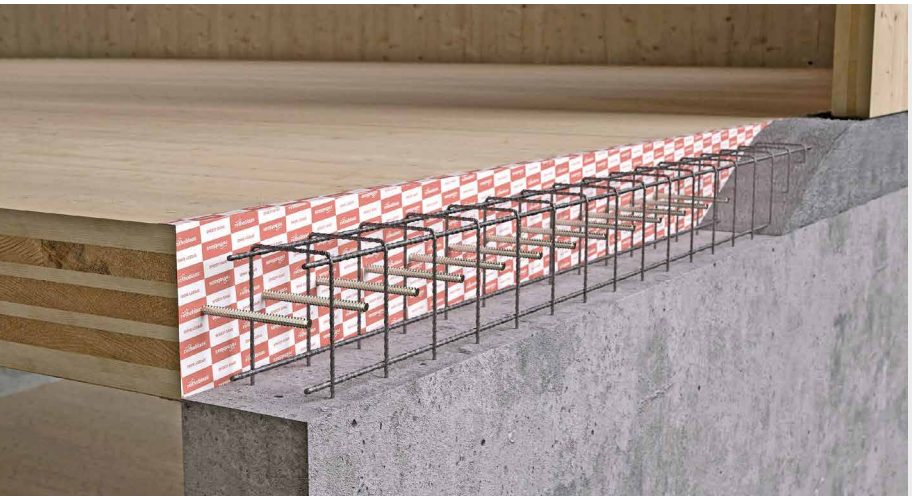

FIELDS OF USE

Moment, shear and axial load resistant connections for CLT panels.
The high stiffness of reinforced concrete allows for strong resistant connections in all directions with high stiffness.

Can be applied to:

- floors or walls with CLT or LVL panels.

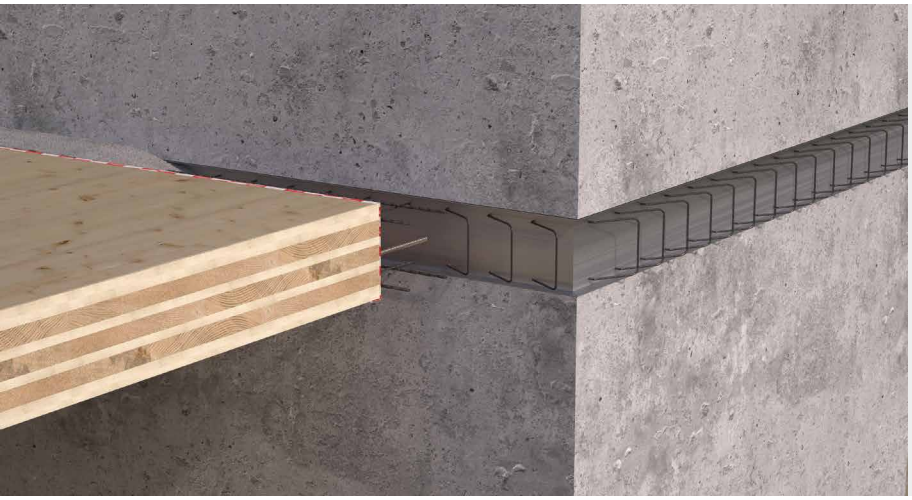

SPIDER AND PILLAR

TC FUSION complements the SPIDER and PILLAR systems, allowing the implementation of moment connections between panels. Rothoblaas waterproofing systems make it possible to separate timber and concrete.

CONSTRUCTION JOINTS

TC FUSION can be used in conjunction with construction joint systems to connect panel floors and the bracing core with a small addition to the casting.

CODES AND DIMENSIONS

VGS - full thread screw with countersunk or hexagonal head

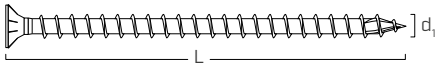

d_1 [mm]	CODE	L [mm]	b [mm]	pcs	
9 TX 40	**VGS9200**	200	190	25	
	VGS9220	220	210	25	
	VGS9240	240	230	25	
	VGS9260	260	250	25	
	VGS9280	280	270	25	
	VGS9300	300	290	25	
	VGS9320	320	310	25	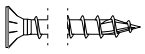
	VGS9340	340	330	25	
	VGS9360	360	350	25	
	VGS9380	380	370	25	
	VGS9400	400	390	25	
	VGS9440	440	430	25	
	VGS9480	480	470	25	
	VGS9520	520	510	25	
	VGS9560	560	550	25	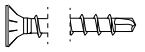
	VGS9600	600	590	25	
11 TX 50	**VGS11200**	200	190	25	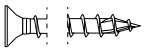
	VGS11225	225	215	25	
	VGS11250	250	240	25	
	VGS11275	275	265	25	
	VGS11300	300	290	25	
	VGS11325	325	315	25	
	VGS11350	350	340	25	
	VGS11375	375	365	25	
	VGS11400	400	390	25	
	VGS11425	425	415	25	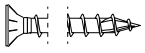
	VGS11450	450	440	25	
	VGS11475	475	465	25	
	VGS11500	500	490	25	
	VGS11525	525	515	25	
	VGS11550	550	540	25	
	VGS11575	575	565	25	
	VGS11600	600	590	25	
11 SW 17 TX 50	**VGS11650**	650	630	25	
	VGS11700	700	680	25	
	VGS11750	750	680	25	
	VGS11800	800	780	25	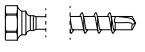
	VGS11850	850	830	25	
	VGS11900	900	880	25	
	VGS11950	950	930	25	
	VGS111000	1000	980	25	
13 TX 50	**VGS13200**	200	190	25	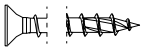
	VGS13250	250	240	25	
	VGS13300	300	280	25	
	VGS13350	350	330	25	
	VGS13400	400	380	25	
	VGS13450	450	430	25	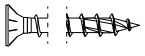
	VGS13500	500	480	25	
	VGS13550	550	530	25	
	VGS13600	600	580	25	
13 SW 19 TX 50	**VGS13650**	650	630	25	
	VGS13700	700	680	25	
	VGS13750	750	730	25	
	VGS13800	800	780	25	
	VGS13850	850	830	25	
	VGS13900	900	880	25	
	VGS13950	950	930	25	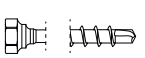
	VGS131000	1000	980	25	
	VGS131100	1100	1080	25	
	VGS131200	1200	1180	25	
	VGS131300	1300	1280	25	
	VGS131400	1400	1380	25	
	VGS131500	1500	1480	25	

VGZ - mini full threaded screw with cylindrical head

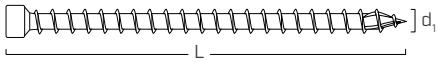

d_1 [mm]	CODE	L [mm]	b [mm]	pcs	
9 TX 40	**VGZ9200**	200	190	25	
	VGZ9220	220	210	25	
	VGZ9240	240	230	25	
	VGZ9260	260	250	25	
	VGZ9280	280	270	25	
	VGZ9300	300	290	25	
	VGZ9320	320	310	25	
	VGZ9340	340	330	25	
	VGZ9360	360	350	25	
	VGZ9380	380	370	25	
	VGZ9400	400	390	25	
	VGZ9440	440	430	25	
	VGZ9480	480	470	25	
	VGZ9520	520	510	25	
	VGZ9560	560	550	25	
	VGZ9600	600	590	25	
11 TX 50	**VGZ11200**	200	190	25	
	VGZ11250	250	240	25	
	VGZ11275	275	265	25	
	VGZ11300	300	290	25	
	VGZ11325	325	315	25	
	VGZ11350	350	340	25	
	VGZ11375	375	365	25	
	VGZ11400	400	390	25	
	VGZ11425	425	415	25	
	VGZ11450	450	440	25	
	VGZ11475	475	465	25	
	VGZ11500	500	490	25	
	VGZ11525	525	515	25	
	VGZ11550	550	540	25	
	VGZ11575	575	565	25	
	VGZ11600	600	590	25	
	VGZ11650	650	640	25	
	VGZ11700	700	690	25	
	VGZ11750	750	740	25	
	VGZ11800	800	790	25	
	VGZ11850	850	840	25	
	VGZ11900	900	890	25	
	VGZ11950	950	940	25	
	VGZ111000	1000	990	25	

RTR - structural reinforcement system

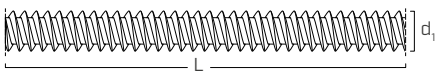

d_1 [mm]	CODE	L [mm]	pcs
16	**RTR162200**	2200	10

GEOMETRY AND MECHANICAL CHARACTERISTICS

VGS - VGZ

			VGS					VGZ	
Nominal diameter	**d_1**	**[mm]**	**9**	**11**	**11**	**13**	**13**	**9**	**11**
Length	L	[mm]	-	≤ 600 mm	> 600 mm	≤ 600 mm	> 600 mm	-	-
Countersunk head diameter	d_K	[mm]	16,00	19,30	-	22,00	-	11,50	13,50
Countersunk head thickness	t_1	[mm]	6,50	8,20	-	9,40	-	-	-
Wrench size	SW	-	-	-	SW 17	-	SW 19	-	-
Hexagonal head thickness	t_s	[mm]	-	-	6,40	-	7,50	-	-
Internal thread diameter	d_2	[mm]	5,90	6,60	6,60	8,00	8,00	5,90	6,60
Pre-drilling hole diameter(1)	$d_{V,S}$	[mm]	5,0	6,0	6,0	8,0	8,0	5,0	6,0
Pre-drilling hole diameter(2)	$d_{V,H}$	[mm]	6,0	7,0	7,0	9,0	9,0	6,0	7,0
Characteristic tensile strength	$f_{tens,k}$	[kN]	25,4	38,0	38,0	53,0	53,0	25,4	38,0
Characteristic yield moment	$M_{y,k}$	[Nm]	27,2	45,9	45,9	70,9	70,9	27,2	45,9
Characteristic yield strength	$f_{y,k}$	[N/mm²]	1000	1000	1000	1000	1000	1000	1000

(1) Pre-drilling valid for softwood.
(2) Pre-drilling valid for hardwood and beech LVL.

RTR

Nominal diameter	**d_1**	**[mm]**	**16**
Internal thread diameter	d_2	[mm]	12,00
Pre-drilling hole diameter(1)	$d_{V,S}$	[mm]	13,0
Characteristic tensile strength	$f_{tens,k}$	[kN]	100,0
Characteristic yield moment	$M_{y,k}$	[Nm]	200,0
Characteristic yield strength	$f_{y,k}$	[N/mm²]	640

(1) Pre-drilling valid for softwood.

MECHANICAL CHARACTERISTICS OF TC FUSION SYSTEM

			VGS/VGZ			RTR
Nominal diameter	**d_1**	**[mm]**	**9**	**11**	**13**	**16**
Tangential strength of adhesion in concrete C25/30	$f_{b,k}$	[N/mm²]	12,5	12,5	12,5	9,0

For applications with different materials please see ETA-22/0806.

RELATED PRODUCTS



D 38 RLE
4-SPEED DRILL DRIVER



SPEEDY BAND
UNIVERSAL SINGLE-SIDED TAPE WITHOUT RELEASE LINER



FLUID MEMBRANE
SYNTHETIC SEALING MEMBRANE FOR BRUSH AND SPRAY APPLICATION



INVISI BAND
TRANSPARENT SINGLE-SIDED ADHESIVE TAPE WITHOUT LINER, RESISTANT TO UV AND HIGH TEMPERATURES

Find out more at **www.rothoblaas.com**

FIELD OF USE

ETA-22/0806 is specifically for timber-to-concrete applications with VGS, VGZ and RTR fully threaded connectors.
The calculation method for evaluating both joint strength and stiffness is made explicit.
The connection allows the transfer of shear, tensile and bending moment stresses between timber elements (CLT, LVL, GL) and concrete, both at floor and wall level.
The TC FUSION system was tested and validated at the Arbeitsbereich für Holzbau of the University of Innsbruck as part of a research project co-funded by the Österreichische Forschungsförderungsgesellschaft (FFG).

EXTERNAL LOADS

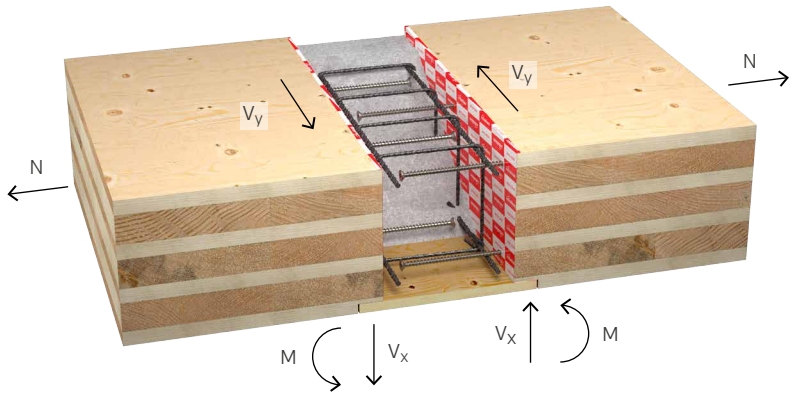

Rigid joint:
- cut in the panel plane (V_y)
- out-of-plane cutting (V_x)
- tension (N)
- bending moment (M)

Hinge joint:
- cut in the panel plane (V_y)
- out-of-plane cutting (V_x)
- tension (N)

STANDARDS AND CERTIFICATIONS INVOLVED

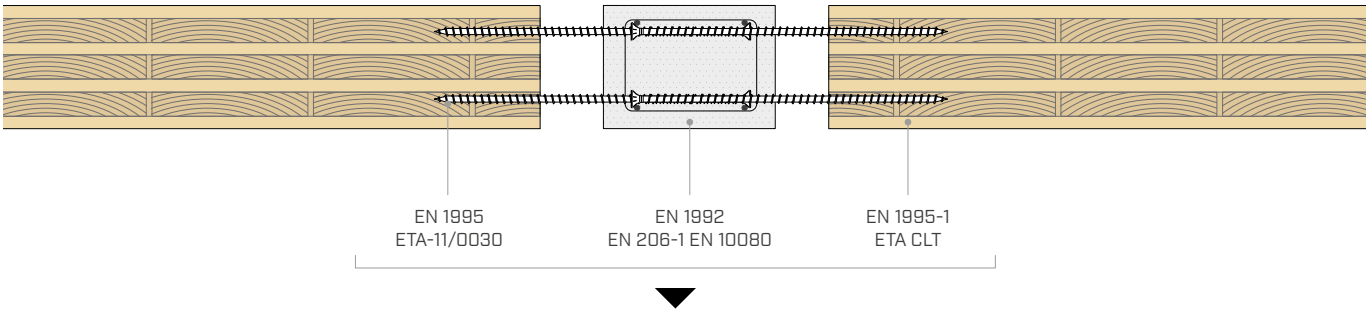

ETA-22/0806 Rothoblaas
FOR TIMBER-TO-CONCRETE CONNECTIONS

USE FOR HYBRID TIMBER-CONCRETE STRUCTURES

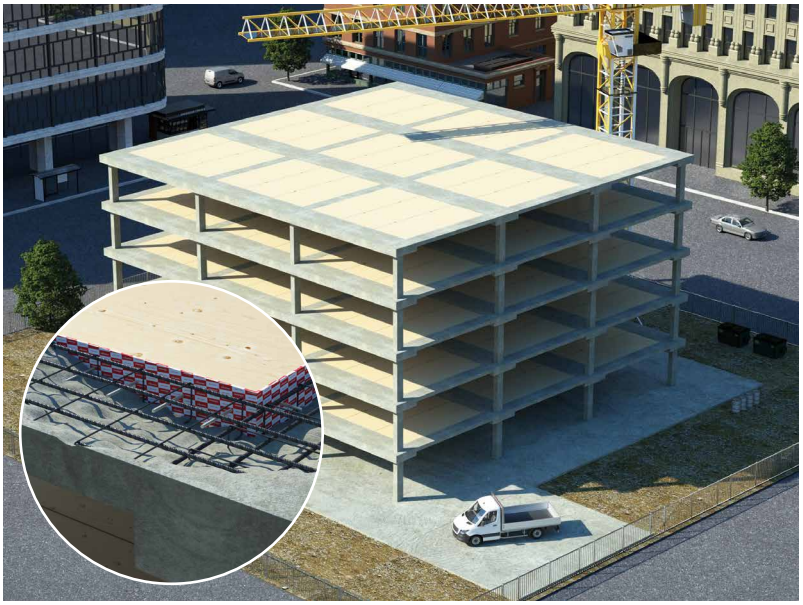

Using the TC FUSION system with screws and threaded rods offers an exceptional level of versatility for the construction of timber-concrete hybrid structures.

The connection is perfectly suited to situations where hinged or semi-rigid constraints are required. Screws and concrete can effectively transfer tension, shear and bending moment. The stiffness and moment of resistance increase progressively with increasing internal torque arm between tensioned side screws and compressed concrete.

Combining the two materials creates a significant increase in stiffness and reduces structural tolerance issues.

INSTALLATION

PANEL-PANEL CONNECTION

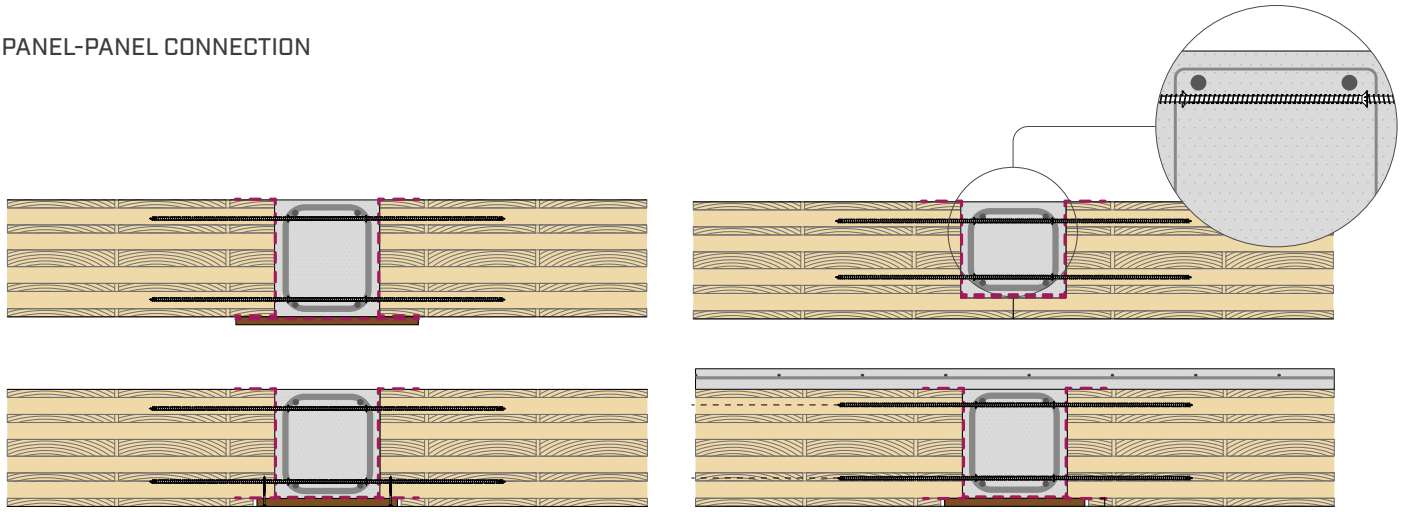

FLOOR-WALL CONNECTION

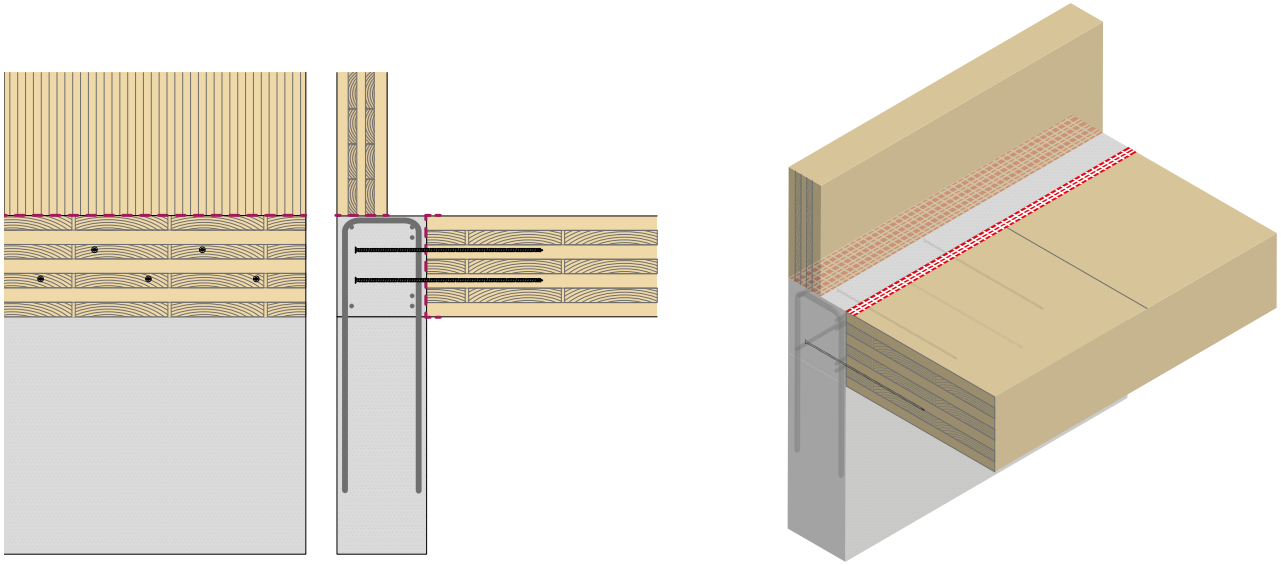

WALL-FOUNDATION CONNECTION

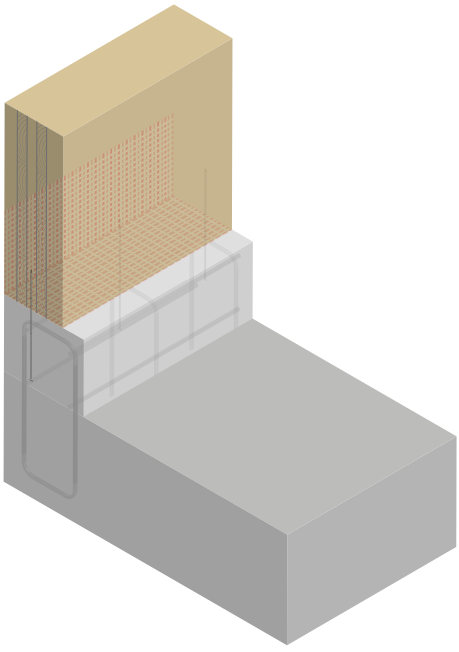

WALL-WALL CONNECTION

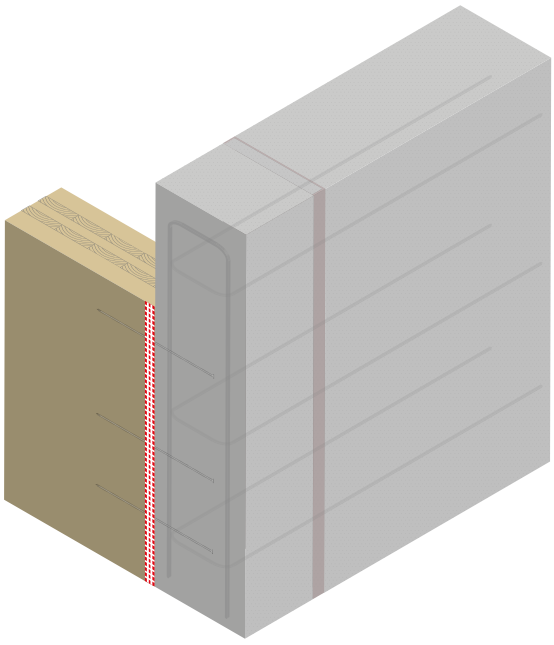

STRUCTURAL VALUES | STRENGTH | TIMBER-CONCRETE-TIMBER

geometry						MOMENT M^*_{Rd}					
						160 (40-20-40-20-40)[1]		180 (40-30-40-30-40)[1]		200 (40-40-40-40-40)[1]	
d_1	L	l_c	l_{0d}[2]	S_g	e_{inf} | e_{sup}	(L)	(T)	(L)	(T)	(L)	(T)
[mm]	[mm]	[mm]	[mm]	[mm]	[mm]	[kNm/m]	[kNm/m]	[kNm/m]	[kNm/m]	[kNm/m]	[kNm/m]
9	300	200	160	120	200	3,5	2,3	4,1	2,9	4,7	3,5
	320	200	160	140	200	4,1	2,6	4,8	3,3	5,5	4,1
	340	200	160	160	200	4,6	3,0	5,4	3,8	6,2	4,6
	360	200	160	180	200	5,1	3,3	6,1	4,2	7,0	5,1
	380	200	160	200	200	5,7	3,7	6,7	4,7	7,7	5,7
	400	200	160	220	200	6,2	4,0	7,3	5,1	8,4	6,2
	440	200	160	260	200	7,2	4,7	8,5	6,0	9,8	7,2
	480	200	160	300	200	8,2	5,3	9,7	6,8	11,2	8,2
	520	200	160	340	200	9,2	5,9	10,9	7,6	12,5	9,2
11	325	200	160	145	200	4,9	3,2	5,8	4,0	6,6	4,9
	350	200	160	170	200	5,7	3,7	6,7	4,7	7,7	5,7
	375	200	160	195	200	6,5	4,2	7,6	5,3	8,8	6,5
	400	200	160	220	200	7,3	4,7	8,6	6,0	9,8	7,3
	450	200	160	270	200	8,8	5,6	10,3	7,2	11,9	8,8
	500	200	160	320	200	10,2	6,6	12,1	8,4	13,9	10,2
	550	200	160	370	200	11,7	7,5	13,7	9,6	15,8	11,7
	600	200	160	420	200	13,0	8,3	15,4	10,7	17,8	13,0
13	400	230	190	190	200	7,2	4,7	8,5	5,9	9,8	7,2
	450	230	190	240	200	9,0	5,8	10,6	7,4	12,2	9,0
	500	230	190	290	200	10,7	6,8	12,6	8,7	14,5	10,7
	600	230	190	390	200	13,9	8,9	16,4	11,4	18,9	13,9
	700	230	190	490	200	17,0	10,8	20,1	13,9	23,2	17,0
	800	230	190	590	200	19,9	12,6	23,6	16,3	27,3	19,9
	900	250	210	670	200	22,2	14,0	26,4	18,1	30,5	22,2
16	545	270	230	295	200	9,6	6,2	11,3	7,9	13,0	9,6
	650	270	230	400	200	12,6	8,1	14,9	10,4	17,2	12,6
	730	270	230	480	200	14,8	9,5	17,5	12,2	20,2	14,8
	900	270	230	650	200	19,3	12,2	22,9	15,8	26,4	19,3
	1095	270	230	845	200	24,2	15,1	28,7	19,7	33,2	24,2

TIMBER-CONCRETE-TIMBER INSTALLATION

CONFIGURATION **(L)**

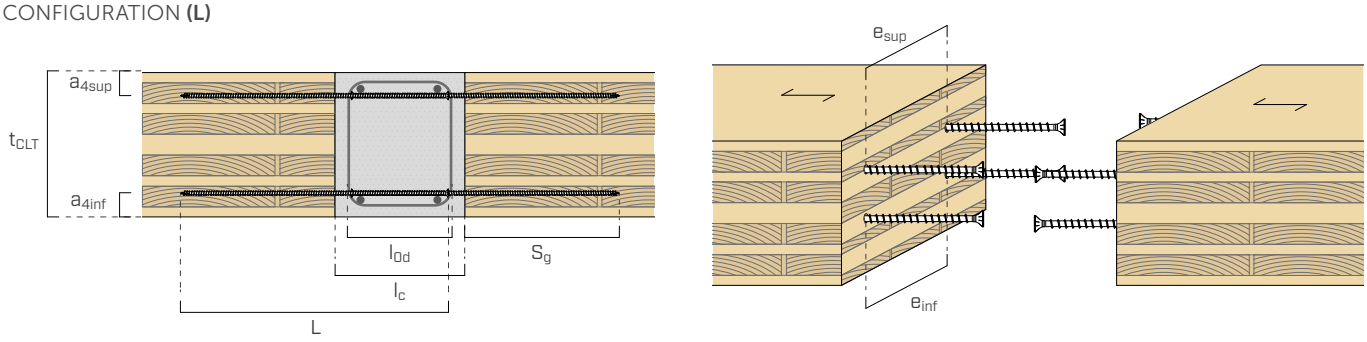

CONFIGURATION **(T)**

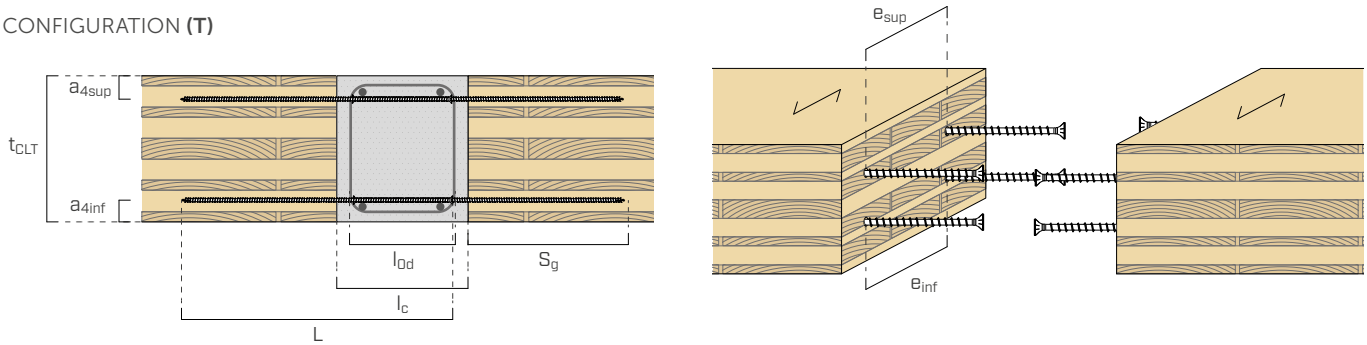

LEGEND

t_{CLT}	connected CLT panel thickness	e_{inf}	lower screws spacing
S_g	screw pull-through length	e_{sup}	upper screws spacing
l_{0d}	overlap length	a_{4inf}	distance of the lower screws from the edge
l_c	concrete element width	a_{4sup}	distance of the upper screws from the edge

MOMENT M^*_{Rd}								SHEAR[3] V^*_{Rd}	TENSION N^*_{Rd}
220 (40-40-20-20-20-40-40)[1]		240 (40-40-20-40-20-40-40)[1]		260 (40-40-30-40-30-40-40)[1]		280 (40-40-40-40-40-40-40)[1]			
(L)	(T)	(L)	(T)	(L)	(T)	(L)	(T)		
[kNm/m]	[kNm/m]	[kNm/m]	[kNm/m]	[kNm/m]	[kNm/m]	[kNm/m]	[kNm/m]	[kN/m]	[kN/m]
5,3	4,1	5,9	4,7	6,6	5,3	7,2	5,9	3,8	6,1
6,2	4,8	6,9	5,5	7,6	6,2	8,3	6,9	4,0	7,1
7,0	5,4	7,8	6,2	8,7	7,0	9,5	7,8	4,3	8,1
7,9	6,1	8,8	7,0	9,7	7,9	10,6	8,8	4,5	9,1
8,7	6,7	9,7	7,7	10,7	8,7	11,7	9,7	4,5	10,0
9,5	7,3	10,6	8,4	11,7	9,5	12,8	10,6	4,5	11,0
11,1	8,5	12,4	9,8	13,7	11,1	14,9	12,4	4,5	12,8
12,7	9,7	14,1	11,2	15,6	12,7	17,1	14,1	4,5	14,7
14,2	10,9	15,8	12,5	17,5	14,2	19,1	15,8	4,5	16,5
7,5	5,8	8,4	6,6	9,2	7,5	10,1	8,4	5,3	8,7
8,7	6,7	9,7	7,7	10,8	8,7	11,8	9,7	5,6	10,1
9,9	7,6	11,1	8,8	12,2	9,9	13,4	11,1	6,0	11,5
11,1	8,6	12,4	9,8	13,7	11,1	15,0	12,4	6,2	12,9
13,5	10,3	15,0	11,9	16,6	13,5	18,1	15,0	6,2	15,6
15,7	12,1	17,5	13,9	19,4	15,7	21,2	17,5	6,2	18,3
17,9	13,7	20,0	15,8	22,1	17,9	24,2	20,0	6,2	20,9
20,1	15,4	22,5	17,8	24,8	20,1	27,2	22,5	6,2	23,5
11,1	8,5	12,4	9,8	13,6	11,1	14,9	12,4	7,2	12,8
13,8	10,6	15,4	12,2	17,0	13,8	18,6	15,4	8,0	16,0
16,4	12,6	18,3	14,5	20,2	16,4	22,1	18,3	8,0	19,1
21,4	16,4	23,9	18,9	26,4	21,4	29,0	23,9	8,0	25,1
26,3	20,1	29,4	23,2	32,5	26,3	35,6	29,4	8,0	31,0
31,0	23,6	34,6	27,3	38,3	31,0	42,0	34,6	8,0	36,8
34,6	26,4	38,7	30,5	42,9	34,6	47,0	38,7	8,0	41,3
14,8	11,3	16,5	13,0	18,2	14,8	19,9	16,5	11,4	17,2
19,5	14,9	21,7	17,2	24,0	19,5	26,3	21,7	12,8	22,8
22,9	17,5	25,6	20,2	28,3	22,9	31,0	25,6	13,8	26,9
30,0	22,9	33,6	26,4	37,1	30,0	40,7	33,6	14,2	35,6
37,7	28,7	42,3	33,2	46,8	37,7	51,3	42,3	14,2	45,2

TIMBER-TO-CONCRETE INSTALLATION

CONFIGURATION **(L)**

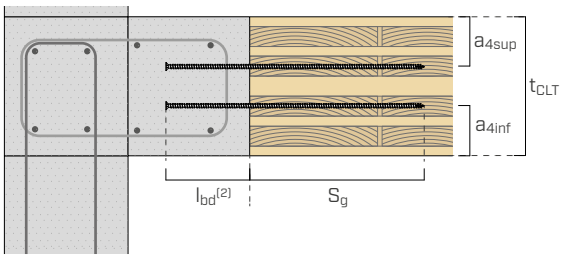

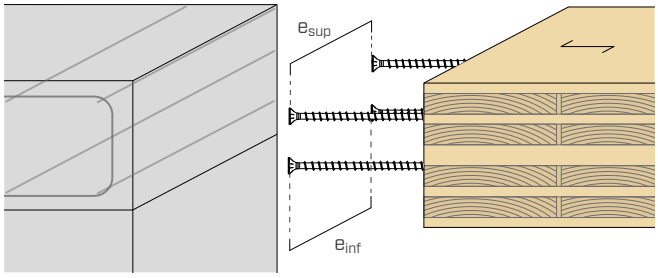

CONFIGURATION **(T)**

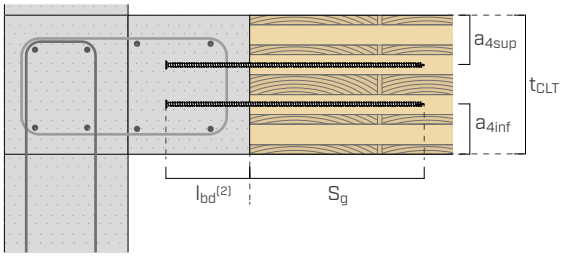

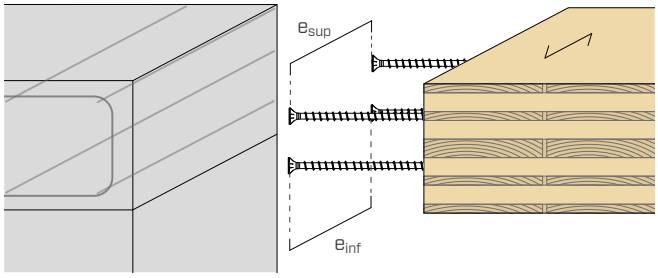

NOTES

(1) Panel composition, thickness of overlapping layers with cross fibre orientation.

(2) l_{0d} represents the overlap length of the connectors. In the case of timber-to-concrete joints, this size is to be understood as anchorage length l_{bd}.

(3) If the edge distance of the panel is less than the prescribed edge distance for the screws (ETA-11/0030), the shear strength must be reduced in accordance with the "general principles" section. However, the geometric condition that the screws must be contained within the reinforcement rods of the reinforced concrete component and the minimum distance must be verified.

STRUCTURAL VALUES | STIFFNESS | TIMBER-CONCRETE-TIMBER[*]

geometry						ROTATIONAL STIFFNESS k^*_{φ}					
						160 (40-20-40-20-40)[1]		180 (40-30-40-30-40)[1]		200 (40-40-40-40-40)[1]	
d_1	L	l_c	l_{0d}[2]	S_g	e_{inf} | e_{sup}	(L)	(T)	(L)	(T)	(L)	(T)
[mm]	[mm]	[mm]	[mm]	[mm]	[mm]	[kNm/rad/m]	[kNm/rad/m]	[kNm/rad/m]	[kNm/rad/m]	[kNm/rad/m]	[kNm/rad/m]
9	300	200	160	120	200	632	307	913	600	1246	838
	320	200	160	140	200	732	355	1057	695	1443	970
	340	200	160	160	200	830	403	1199	789	1636	1101
	360	200	160	180	200	927	450	1339	881	1828	1229
	380	200	160	200	200	927	450	1339	881	1828	1229
	400	200	160	220	200	927	450	1339	881	1828	1229
	440	200	160	260	200	927	450	1339	881	1828	1229
	480	200	160	300	200	927	450	1339	881	1828	1229
	520	200	160	340	200	927	450	1339	881	1828	1229
11	325	200	160	145	200	841	394	1233	798	1699	1128
	350	200	160	170	200	975	457	1429	925	1970	1308
	375	200	160	195	200	1107	518	1622	1049	2235	1484
	400	200	160	220	200	1235	578	1810	1171	2494	1656
	450	200	160	270	200	1235	578	1810	1171	2494	1656
	500	200	160	320	200	1235	578	1810	1171	2494	1656
	550	200	160	370	200	1235	578	1810	1171	2494	1656
	600	200	160	420	200	1235	578	1810	1171	2494	1656
13	400	230	190	190	200	1258	589	1844	1193	2541	1687
	450	230	190	240	200	1550	725	2271	1469	3129	2078
	500	230	190	290	200	1662	778	2436	1576	3357	2229
	600	230	190	390	200	1662	778	2436	1576	3357	2229
	700	230	190	490	200	1662	778	2436	1576	3357	2229
	800	230	190	590	200	1662	778	2436	1576	3357	2229
	900	250	210	670	200	1662	778	2436	1576	3357	2229
16	545	270	230	295	200	2209	1034	3237	2094	4461	2962
	650	270	230	400	200	2362	1106	3461	2239	4770	3167
	730	270	230	480	200	2362	1106	3461	2239	4770	3167
	900	270	230	650	200	2362	1106	3461	2239	4770	3167
	1095	270	230	845	200	2362	1106	3461	2239	4770	3167

[*] The table refers to the case of timber-concrete-timber connections. In the case of timber-to-concrete, the stiffness of the connection must be doubled.

NOTES

[1] Panel composition, thickness of overlapping layers with cross orientation.

[2] l_{0d} represents the overlap length of the connectors. In the case of timber-to-concrete joints, this size is to be understood as anchorage length l_{bd}.

GENERAL PRINCIPLES

- The case of timber elements made of CLT was considered in the calculation. A compressive strength parallel to the fibres of f_{c0k} = 21 Mpa and an average elastic modulus parallel to the fibres of E_{0m} = 11500 Mpa. In the calculation of strengths and stiffnesses, the contribution of layers with fibres orthogonal to the stress is neglected. A concrete strength class of C25/30 is assumed, preferably with low shrinkage. If higher strength classes (max C50) are used, the adhesion stresses can be increased, according to ETA22/0806.
- For determining the flexural strength, the distance of the screws from the tensioned edge of the a_{4inf} panel was considered to be: 41 mm for Ø9 mm screws and 45 mm for Ø11, Ø13 screws and RTR bars.
- When using the system with other materials, the axial screw strengths must be calculated according to ETA-11/0030.
- Wood and concrete elements must be sized and checked separately. Minimum anchor and overlap lengths, minimum reinforcement arrangement and geometric requirements are indicated in ETA-22/0806.
- In the case of combined stresses, the guidelines in ETA-22/0806 must be followed.
- The safety coefficients γ_M must be taken according to the current regulations used for the calculation. The tables were developed assuming:

  k_{mod} = 1 (short/instantaneous duration)
  γ_M = 1,3 (connections)
  $\gamma_{M,concrete}$ = 1,5 (concrete)
  α_{cc} = 0,85 concrete viscosity coefficient in compression

MOMENT OF RESISTANCE M

- Characteristic values are caluclated in accordance with EN 1995-1-1 and in accordance with ETA-22/0806 and ETA-11/0030. Design resistance values can be obtained from the tabulated values as follows:

$$M_{Rd} = M^*_{Rd} \cdot \frac{200}{e} \cdot \frac{k_{mod}}{1,0} \cdot \frac{1,3}{\gamma_M}$$

where:
M_{Rd} moment of resistance referred to design pitch
M^*_{Rd} moment of resistance referred to a standard pitch of 200 mm
e screw pitch at the tensioned flap of the joint (e_{inf} or e_{sup})

SHEAR V_y

- The strength of the system is obtained from the formula:

$$V_{Rd} = V^*_{Rd} \cdot \left(\frac{1000}{e_{inf}} + \frac{1000}{e_{sup}}\right) \cdot \frac{k_{mod}}{1,0} \cdot \frac{1,3}{\gamma_M}$$

where:
V_{Rd} shear strength referred to design pitch
V^*_{Rd} unitary resistant cut (1 screw per metre)
e_{inf} pitch of the screws to the tensioned flap of the joint
e_{sup} screw pitch at the compressed flap of the joint

ROTATIONAL STIFFNESS k^*_{φ}								LATERAL STIFFNESS k^*_{ser}
220 (40-40-20-20-20-40-40)[1]		240 (40-40-20-40-20-40-40)[1]		260 (40-40-30-40-30-40-40)[1]		280 (40-40-40-40-40-40-40)[1]		
(L)	(T)	(L)	(T)	(L)	(T)	(L)	(T)	
[kNm/rad/m]	[kNm/rad/m]	[kNm/rad/m]	[kNm/rad/m]	[kNm/rad/m]	[kNm/rad/m]	[kNm/rad/m]	[kNm/rad/m]	[N/mm/mm]
1630	1115	2066	1431	2553	1787	3092	2183	1371
1887	1291	2392	1658	2957	2070	3581	2528	1371
2141	1465	2714	1880	3354	2348	4062	2868	1371
2391	1636	3031	2100	3746	2622	4537	3202	1371
2391	1636	3031	2100	3746	2622	4537	3202	1371
2391	1636	3031	2100	3746	2622	4537	3202	1371
2391	1636	3031	2100	3746	2622	4537	3202	1371
2391	1636	3031	2100	3746	2622	4537	3202	1371
2391	1636	3031	2100	3746	2622	4537	3202	1371
2240	1515	2855	1960	3545	2462	4309	3020	1928
2597	1757	3310	2273	4110	2854	4996	3502	1928
2946	1993	3755	2578	4663	3238	5668	3973	1928
3288	2225	4191	2877	5204	3614	6326	4434	1928
3288	2225	4191	2877	5204	3614	6326	4434	1928
3288	2225	4191	2877	5204	3614	6326	4434	1928
3288	2225	4191	2877	5204	3614	6326	4434	1928
3288	2225	4191	2877	5204	3614	6326	4434	1928
3349	2266	4269	2931	5301	3681	6444	4517	2562
4125	2791	5259	3610	6529	4534	7937	5563	2562
4425	2994	5641	3872	7004	4864	8514	5968	2562
4425	2994	5641	3872	7004	4864	8514	5968	2562
4425	2994	5641	3872	7004	4864	8514	5968	2562
4425	2994	5641	3872	7004	4864	8514	5968	2562
4425	2994	5641	3872	7004	4864	8514	5968	2562
5881	3979	7496	5146	9307	6463	11314	7931	3646
6288	4255	8016	5503	9952	6911	12099	8480	3646
6288	4255	8016	5503	9952	6911	12099	8480	3646
6288	4255	8016	5503	9952	6911	12099	8480	3646
6288	4255	8016	5503	9952	6911	12099	8480	3646

SHEAR V_x

- The strength of the system is obtained from the formula:

$$V_{Rd} = V^*_{Rd} \cdot \left(\frac{1000}{e_{inf}} + \frac{1000}{e_{sup}}\right) \cdot \beta \cdot \frac{k_{mod}}{1,0} \cdot \frac{1,3}{\gamma_M}$$

$$\beta = min\left\{\frac{a_{4,inf}}{a_{4,inf,min}}; \frac{a_{4,sup}}{a_{4,sup,min}}; 1\right\}$$

where:

V_{Rd} shear strength referred to design pitch
V^*_{Rd} unitary resistant cut (1 screw per metre), with edge distance greater than the minimum according to ETA-11/0030
e_{inf} pitch of the screws to the tensioned flap of the joint
e_{sup} screw pitch at the compressed flap of the joint
β coefficient for reducing the shear resistance of shear screws in case of deviation from the minimum distance specified in ETA-11/0030
$a_{4inf,min}$ and $a_{4sup,min}$ are the minimum distances according to ETA-11/0030 from the lower and upper edge of the panel (6 d)
a_{4inf} and a_{4sup} are the design distances from the bottom and top edge of the panel

In the previous formula, the assumption was made to reduce the strength of all screws according to the most penalising distance from the edge.

TENSION N

- The strength of the system is obtained from the formula:

$$N_{Rd} = N^*_{Rd} \cdot \left(\frac{1000}{e_{inf}} + \frac{1000}{e_{sup}}\right) \cdot \frac{k_{mod}}{1,0} \cdot \frac{1,3}{\gamma_M}$$

where:

N_{Rd} tensile strength referred to the design pitch
N^*_{Rd} unit tensile strength (1 screw per metre)
e_{inf} pitch of the screws to the tensioned flap of the joint
e_{sup} screw pitch at the compressed flap of the joint

ROTATIONAL STIFFNESS

- In the calculation of the system an effective length limited to a value of 20d was assumed, as stated in ETA-22/0806. In the case of timber-to-concrete-to-timber connections, the rotational stiffness must be calculated using the following formula; for timber-to-concrete connections this value must be doubled.

$$k_{\varphi} = k^*_{\varphi} \cdot \frac{200}{e}$$

where:

kφ rotational stiffness referred to the design pitch
k*φ rotational stiffness based on a standard pitch of 200 mm
e screw pitch at the tensioned flap of the joint

PLANE/OFF-PLANE STIFFNESS

- In the case of timber-concrete-timber connections, the lateral stiffness must be calculated using the following formula; for timber-to-concrete connections this value must be doubled. The stiffness of the system is obtained from the formula.

$$k_{ser} = k^*_{ser} \cdot \left(\frac{1000}{e_{inf}} + \frac{1000}{e_{sup}}\right)$$

where:

k_{ser} connection stiffness per linear metre
k^*_{ser} single screw lateral stiffness
e_{inf} pitch of the screws to the tensioned flap of the joint
e_{sup} screw pitch at the compressed flap of the joint

AXIAL STIFFNESS

- For evaluation of axial stiffness, refer to ETA-22/0806.

JOINTS FOR COLUMNS, PERGOLAS AND FENCES

JOINTS FOR COLUMNS, PERGOLAS AND FENCES

ADJUSTABLE POST BASES

R10 - R20
ADJUSTABLE POST BASE 454

R60
ADJUSTABLE POST BASE 460

R40
ADJUSTABLE POST BASE 464

R70
EMBEDDED ADJUSTABLE POST BASE 467

FIXED POST BASES

F70
"T" SHAPED POST BASE 468

X10
CROSS-SHAPED POST BASE 476

S50
HIGHLY-RESISTANT POST BASE 482

P10 - P20
EMBEDDED TUBULAR POST BASE 486

STANDARD POST BASE

TYP F - FD - M 490

FENCES AND TERRACES

ROUND
JOINTS FOR ROUND POSTS 506

BRACE
HINGED PLATE 508

GATE
GATE FASTENERS 510

CLIP
CONNECTORS FOR DECKING 512

STRUCTURAL POST BASES

The wide selection of post bases allows to meet multiple design and aesthetic needs.
The combination of different geometrical features and coatings offer a complete range of solutions.

MATERIALS AND COATINGS

CARBON STEEL WITH ELECTROLYTIC GALVANISING Fe/Zn12c
Zinc-based electrolytic coating with a thickness of 12µm, in accordance with UNI EN ISO 4042. This type of coating has standard performance, ideal for use in non-aggressive environments up to service class 2.

HOT DIP BRIGHT ZINC PLATED CARBON STEEL 55µm
This type of coating is achieved by immersing the product in a bath of molten zinc. With a minimum thickness of 55µm, according to UNI EN ISO 1461, it is suitable for use in a non-aggressive outdoor environment.

CARBON STEEL WITH SPECIAL COATING DAC COAT
Inorganic zinc-aluminium-based coating with excellent scratch resistance properties, thickness 8µm. This type of coating is aesthetically better than 55µm hot-dip galvanising. The zinc-aluminium structure allows for greater durability and long-term performance, exactly like 55µm thick hot-dip galvanising.

A2 | AISI304 STAINLESS STEEL
Austenitic stainless steel. It provides excellent resistance to generalised corrosion and is suitable for applications in non-aggressive industrial and marine areas according to EN 1993-1-4:2005.

EN-AW6005A ALUMINIUM ALLOY
An aluminium alloy for extrusion according to EN 1999-1-1:2007, it provides good corrosion resistance properties and is suitable for use in non-aggressive industrial and marine areas.

GALVANIC CORROSION

The phenomenon of galvanic corrosion, which occurs between dissimilar metals in the presence of an electrolyte (such as moisture or an aqueous solution), must be taken into account when choosing an anchor. This phenomenon may be triggered in the contact area between the anchors and the post base in the presence of moisture, due to the electrochemical potential difference between the metals.
For galvanic coupling corrosion to occur, the 3 conditions below must occur simultaneously:

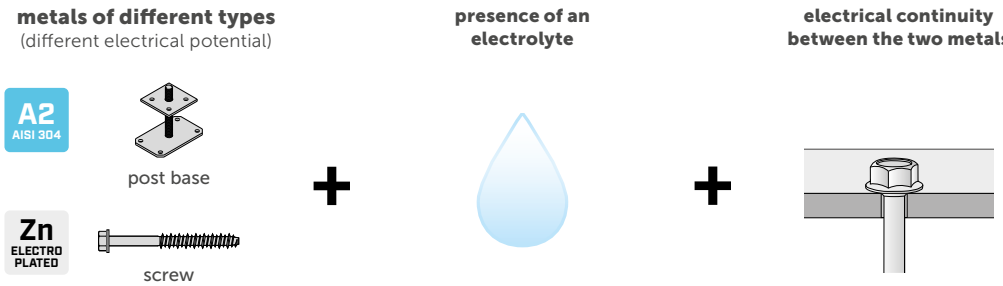

The different fastening-post base combinations in terms of coating are summarised below, divided into: coupling possible, coupling with limited corrosion, no possible coupling.

LEGEND

- possible coupling
- coupling with limited corrosion[2]
- coupling not possible
  The anodic element (zinc) undergoes significant corrosion.

	COATING		post bases				
			S235 Fe/Zn12c	S235 DAC COAT	S235 HDG55	A2 AISI 304	alu 6005A
fastening	Zn ELECTRO PLATED	e.g. SKR, AB1, ABE, INA, LBS	●	●	●	●	●
	C4 EVO COATING	e.g. SKR EVO, LBS EVO	●	●	●	●	●
	A4 AISI 316	e.g. ABE A4 , HBS PLATE A4	●	●	●	●	●

[2] It is recommended to avoid this coupling in aggressive environments or in the presence of salts; alternatively, apply a specific paint to insulate the parts.

For more in-depth information on the service, environmental and timber corrosivity class, refer to the **"SCREWS FOR TIMBER AND TERRACE JOINTS"**catalogue and the "**SCREWING SMARTBOOK**". Visit www.rothoblaas.com in the catalogue section.

		type	materials	code	H [mm]	external loads					
						$R_{1,c\,k}$ [kN]	$R_{1,t\,k}$ [kN]	$R_{2/3\,k}$ [kN]	$R_{4/5\,k}$ [kN]	$M_{2/3\,k}$ [kNm]	$M_{4/5\,k}$ [kNm]
R10 - R20	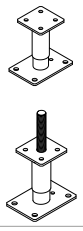		S235 DAC COAT	**R1080M**	130-170	66,0	11,6	1,6	1,6	-	-
				R10100L	170-230	98,4	10,6	2,1	2,1	-	-
				R10100XL	270-330	71,8	10,6	1,3	1,3	-	-
				R10140XL	260-340	107,0	17,4	1,7	1,7	-	-
			S235 DAC COAT	**R2080M**	130-170	66,3	11,6	1,6	1,6	-	-
				R20100L	170-230	98,4	10,6	2,1	2,1	-	-
				R20140XL	260-340	119,0	17,4	1,8	1,8	-	-
R60	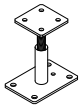		S235 Fe/Zn12c	**R6080M**	125-175	38,6	13,2	2,42	2,42	-	-
				R60100L	150-225	62,3	11,9	1,98	1,98	-	-
R40	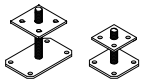		S235 DAC COAT	**R40S70**	35-100	23,3	-	-	-	-	-
				R40S80	40-100	38,1	-	-	-	-	-
				R40L150	40-150	41,9	-	-	-	-	-
				R40L250	40-250	50,7	-	-	-	-	-
			A2 AISI 304	**RI40L150**	40-150	38,8	-	-	-	-	-
				RI40L250	40-250	47,1	-	-	-	-	-
R70	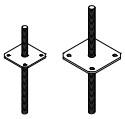		S235 DAC COAT	**R70100**	30-250	66,4	-	-	-	-	-
				R70140	30-350	79,5	-	-	-	-	-
F70			S235 HDG55	**F7080**	21	29,6	17,9	3,4	-	0,5	-
				F70100	21	59,7	15,7	3,8	-	2,0	-
				F70100L	21	55,7	15,7	3,8	-	2,0	-
				F70140	23	94,8	25,7	6,5	-	3,5	-
				F70140L	23	104,0	25,7	6,2	-	3,5	-
	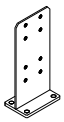		S355 HDG55	**F70180**	40	130,0	130,0	25,9	-	6,5	-
				F70180L	40	115,0	115,0	25,9	-	6,5	-
				F70220	40	190,0	190,0	45,1	-	11,4	-
				F70220L	40	173,0	173,0	45,1	-	11,4	-
			alu 6005A	**ALUMIDI80**	25	27,5	-	21,1	-	-	-
				ALUMIDI120	25	43,9	-	33,1	-	-	-
				ALUMIDI160	25	72,1	-	46,3	-	-	-
				ALUMIDI200	25	110,9	-	74,4	-	-	-
				ALUMIDI240	25	160,0	-	96,2	-	-	-
X10	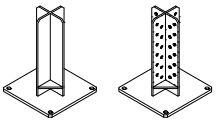		S235 HDG55	**XS10120**	46	154,0	32,6	4,0	4,0	3,0	3,0
				XS10160	50	224,0	59,0	8,0	8,0	3,3	3,3
				XR10120	46	105,0	32,6	4,0	4,0	4,4	4,4
S50	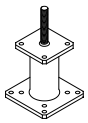		S235 HDG55	**S50120120**	144	157,0	6,2	9,7	9,7	-	-
				S50120180	204	157,0	21,6	20,9	20,9	-	-
				S50160180	212	268,0	21,6	20,9	20,9	-	-
				S50160240	272	268,0	21,6	20,9	20,9	-	-
P10			S235 HDG55	**P10300**	156	78,7	6,2	-	-	-	-
				P10500	256	78,7	14,6	-	-	-	-
P20	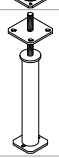		S235 DAC COAT	**P20300**	193-226	59,5	-	-	-	-	-
				P20500	293-326	59,5	-	-	-	-	-

LEGEND



height adjustable after installation



height adjustable



fixed height

R10 - R20

ADJUSTABLE POST BASE

VIDEO

DESIGN REGISTERED

CE ETA-10/0422

ADJUSTABLE AFTER INSTALLATION

The height is adjustable even after installation, thanks to the double thread system concealed by the sleeve, for optimum aesthetics.

RAISED

Outdistanced from the ground to avoid water splash and stagnation and guarantee high durability. Concealed fastening on the timber element.

DURABILITY

DAC COAT coating ensures high aesthetic performance and durability in outdoor contexts.

USA, Canada and more design values available online.

SERVICE CLASS SC1 SC2 SC3

MATERIAL

S235 DAC COAT — S235 carbon steel with special coating DAC COAT

GROUND CLEARANCE

adjustable from 130 mm to 340 mm

EXTERNAL LOADS

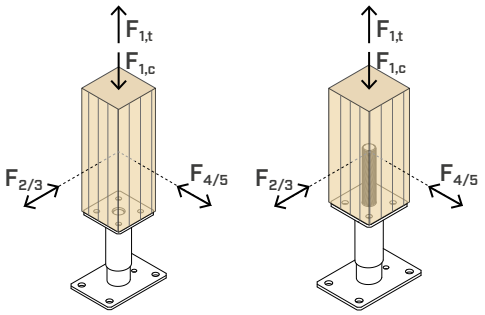

VIDEO
Scan the QR Code and watch the video on our YouTube channel

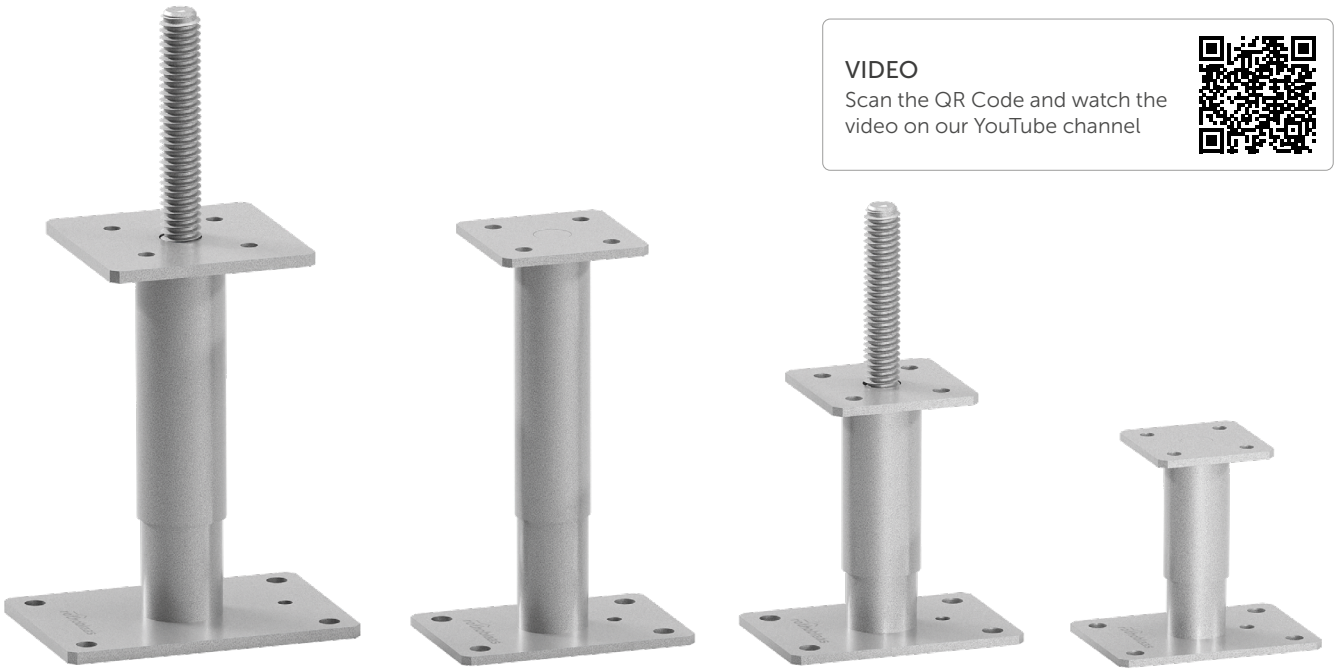



FIELDS OF USE

Ground joints for columns, with the possibility of adjusting the support height after installation. Canopies, columns supporting roofs or floors.

Suitable for columns in:

- solid timber softwood and hardwood
- glulam, LVL



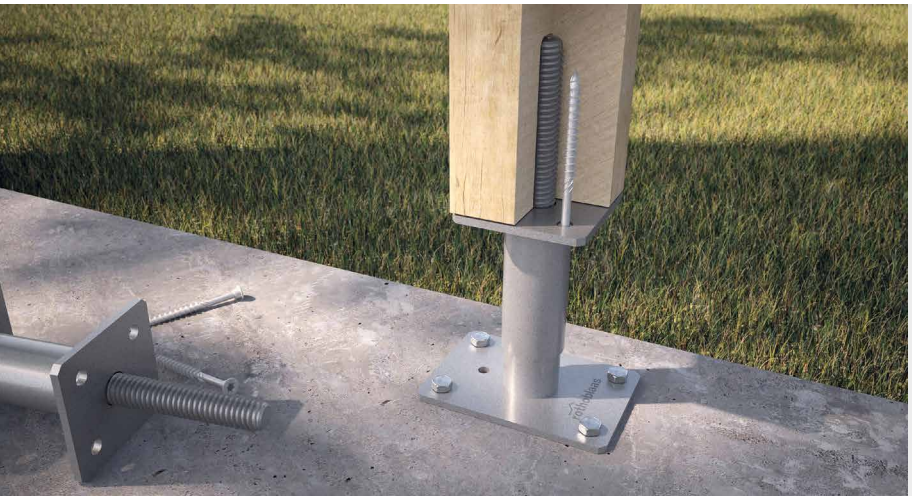

TENSION

High compressive and tensile strengths through the use of VGS all-thread screws or through-rod (in the R20 model).

EASY INSTALLATION

The rectangular base plate allows for simplified installation of anchors and positioning of the column even close to the edges of the concrete.

CODES AND DIMENSIONS

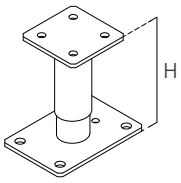

R10

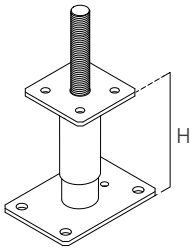

R20

R10

CODE	H [mm] [in]	top plate [mm] [in]	top holes [mm] [in]	bottom plate [mm] [in]	lower holes [mm] [in]	rod Ø [mm] [in]	screws(*)	pcs
R1080M	150 ± 20 *6 ± 13/16*	80 x 80 x 5 *3 1/8 x 3 1/8 x 0.2*	Ø9,5 *Ø0.37*	140 x 100 x 5 *5 1/2 x 4 x 0.2*	Ø12 *Ø0.47*	M20 *0.79*	HBSPEVO6 VGSEVO9 + HUSEVO8	4
R10100L	200 ± 30 *8 ± 1 3/16*	100 x 100 x 6 *4 x 4 x 0.24*	Ø11,5 *Ø0.45*	160 x 110 x 6 *6 1/4 x 4 3/8 x 0.24*	Ø14 *Ø0.55*	M24 *0.95*	HBSPLEVO8	4
R10100XL	300 ± 30 *11 3/4 ± 1 3/16*	100 x 100 x 6 *4 x 4 x 0.24*	Ø11,5 *Ø0.45*	160 x 110 x 6 *6 1/4 x 4 3/8 x 0.24*	Ø14 *Ø0.55*	M24 *0.95*	HBSPLEVO8	4
R10140XL	300 ± 40 *11 3/4 ± 1 9/16*	140 x 140 x 8 *4 x 4 x 0.24*	Ø11,5 *Ø0.45*	200 x 140 x 8 *8 x 5 1/2 x 0.31*	Ø14 *Ø0.55*	M27 *1.07*	HBSPLEVO8	4

(*)Screws are not included and must be ordered separately.

R20

CODE	H [mm] [in]	top plate [mm] [in]	top holes [mm] [in]	bottom plate [mm] [in]	lower holes [mm] [in]	rod Ø x L [mm] [in]	screws(*)	pcs
R2080M	150 ± 20 *6 ± 13/16*	80 x 80 x 5 *3 1/8 x 3 1/8 x 0.2*	Ø9,5 *Ø0.37*	140 x 100 x 5 *5 1/2 x 4 x 0.2*	Ø12 *Ø0.47*	M20 x 80 *0.79 x 3 1/8*	HBSPEVO6 VGSEVO9 + HUSEVO8	4
R20100L	200 ± 30 *8 ± 1 3/16*	100 x 100 x 6 *4 x 4 x 0.24*	Ø11,5 *Ø0.45*	160 x 110 x 6 *6 1/4 x 4 3/8 x 0.24*	Ø14 *Ø0.55*	M24 x 120 *0.95 x 4 3/4*	HBSPLEVO8	4
R20140XL	300 ± 40 *11 3/4 ± 1 9/16*	140 x 140 x 8 *4 x 4 x 0.24*	Ø11,5 *Ø0.45*	200 x 140 x 8 *8 x 5 1/2 x 0.31*	Ø14 *Ø0.55*	M27 x 150 *1.07 x 6*	HBSPLEVO8	4

(*)Screws are not included and must be ordered separately.

FASTENERS

HBS P EVO - C4 EVO pan head screw

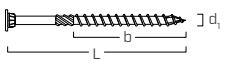

C4 EVO COATING

d_1 [mm]	CODE	L [mm]	b [mm]	pcs
6 TX 30	**HBSPEVO680**	80	50	100

HUS EVO - C4 EVO turned washer



C4 EVO COATING

CODE	$d_{HBS\ EVO}$ [mm]	$d_{VGS\ EVO}$ [mm]	pcs
HUSEVO8	8	9	50

HBS PLATE EVO - C4 EVO pan head screw

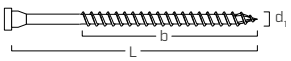

C4 EVO COATING

d_1 [mm]	CODE	L [mm]	b [mm]	pcs
8 TX 40	**HBSPLEVO880**	80	55	100
	HBSPLEVO8160	160	130	100

VGS EVO - C4 EVO fully threaded screw with countersunk head

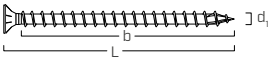

C4 EVO COATING

d_1 [mm]	CODE	L [mm]	b [mm]	pcs
9 TX 40	**VGSEVO9120**	120	110	25

type	description		d [mm]	support	page
XEPOX F	epoxy adhesive	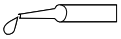	-		136
SKR/SKR EVO	screw-in anchor	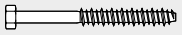	10 - 12		528
AB1	CE1 expansion anchor		10 - 12		536
ABE A4(*)	CE1 expansion anchor		12		534
VIN-FIX	vinyl ester chemical anchor	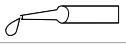	M10 - M12		545

(*)Fastening only possible on R10140XL and R20140XL.

GEOMETRY

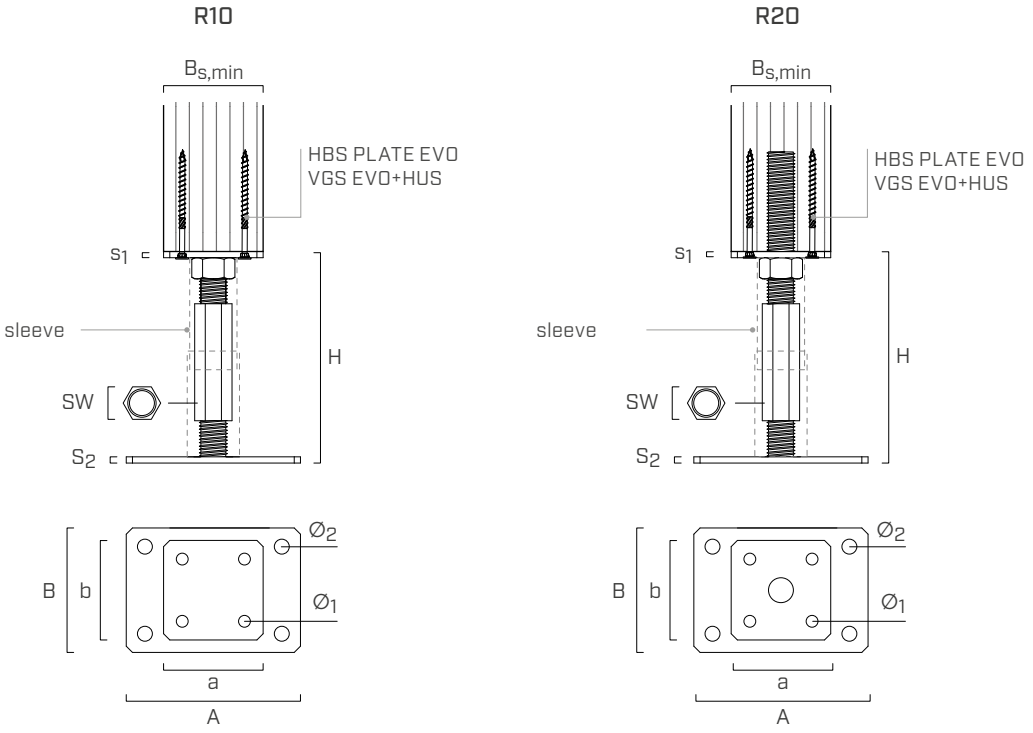

	CODE	$B_{s,min}$	H	a x b x s_1	$Ø_1$	SW	A x B x S_2	$Ø_2$
		[mm]	[mm]	[mm]	[mm]	[mm]	[mm]	
R10	**R1080M**	80	150 ± 20	80 x 80 x 5	Ø9,5	30	140 x 100 x 5	Ø12
	R10100L	100	200 ± 30	100 x 100 x 6	Ø11,5	36	160 x 110 x 6	Ø14
	R10100XL	100	300 ± 30	100 x 100 x 6	Ø11,5	36	160 x 110 x 6	Ø14
	R10140XL	140	300 ± 40	140 x 140 x 8	Ø11,5	41	200 x 140 x 8	Ø14
R20	**R2080M**	80	150 ± 20	80 x 80 x 5	Ø9,5	30	140 x 100 x 5	Ø12
	R20100L	100	200 ± 30	100 x 100 x 6	Ø11,5	36	160 x 110 x 6	Ø14
	R20140XL	140	300 ± 40	140 x 140 x 8	Ø11,5	41	200 x 140 x 8	Ø14

MOUNTING

VIDEO

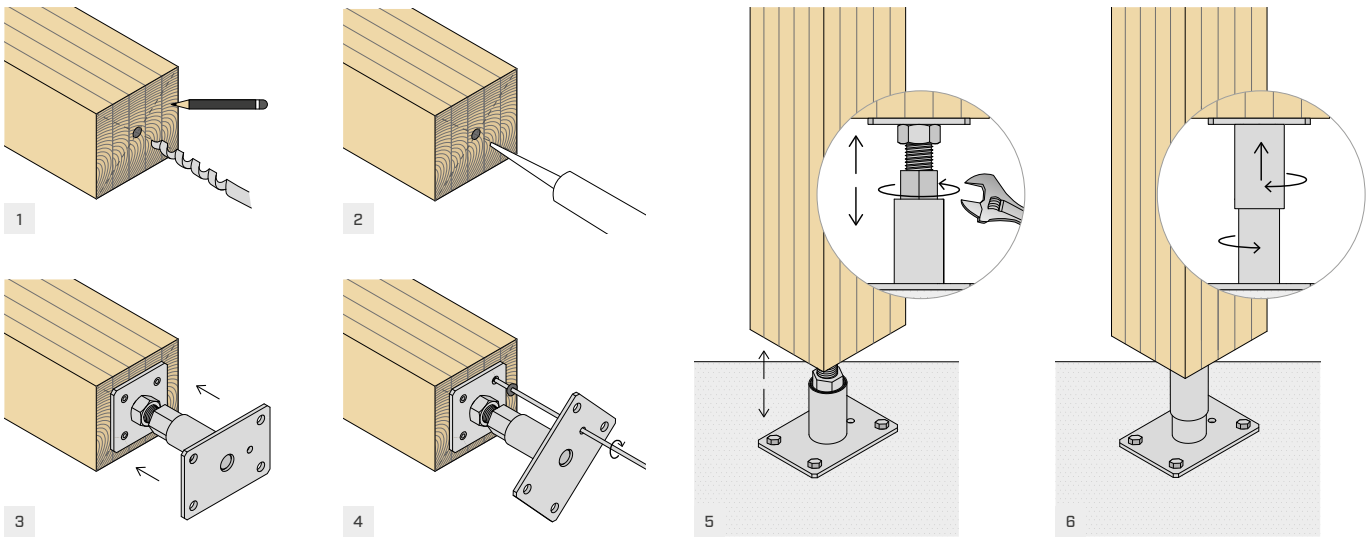

STRUCTURAL VALUES

COMPRESSION STRENGTH

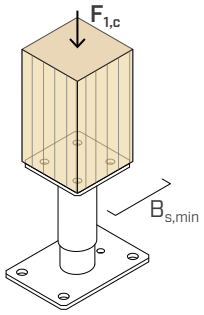

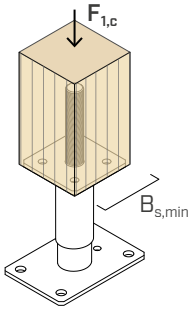

post base		column $B_{s,min}$ [mm]	$R_{1,c\ k\ timber}$ [kN]	γ_{timber}	$R_{1,c\ k\ steel}$ [kN]	γ_{steel}
R10	**R1080M**	80	**128,0**	γ_{MT} (1)	**66,0**	γ_{M1}
	R10100L	100	**201,0**		**98,4**	
	R10100XL	100	**201,0**		**71,8**	
	R10140XL	140	**403,0**		**107,0**	
R20	**R2080M**	80	**122,0**	γ_{MT} (1)	**66,3**	γ_{M1}
	R20100L	100	**192,0**		**98,4**	
	R20140XL	140	**391,0**		**119,0**	

TENSILE STRENGTH

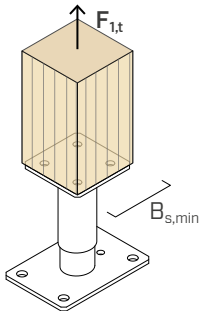

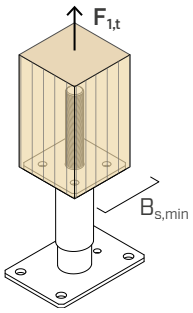

post base		fastening	column $B_{s,min}$ [mm]	$R_{1,t\ k\ timber}$ [kN]	γ_{timber}	$R_{1,t\ k\ steel}$ [kN]	γ_{steel}
R10	**R1080M**	HBSPEVO680 VGSEVO9120+HUSEVO8	80	**4,2** **13,9**	γ_{MC} (2)	**11,6**	γ_{M0}
	R10100L	HBSPLEVO880 HBSPLEVO8160	100	**6,2** **14,6**		**10,6**	
	R10100XL	HBSPLEVO880 HBSPLEVO8160	100	**6,2** **14,6**		**10,6**	
	R10140XL	HBSPLEVO880 HBSPLEVO8160	140	**6,2** **14,6**		**17,4**	
R20	**R2080M**	HBSPEVO680 VGSEVO9120+HUSEVO8	80	**4,2** **13,9**	γ_{MC} (2)	**11,6**	γ_{M0}
	R20100L	HBSPLEVO880 HBSPLEVO8160	100	**6,2** **14,6**		**10,6**	
	R20140XL	HBSPLEVO880 HBSPLEVO8160	140	**6,2** **14,6**		**17,4**	

STRUCTURAL VALUES

SHEAR STRENGTH

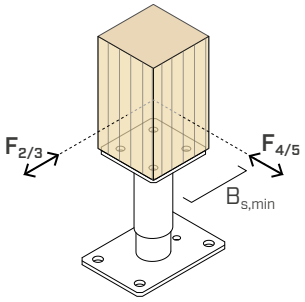

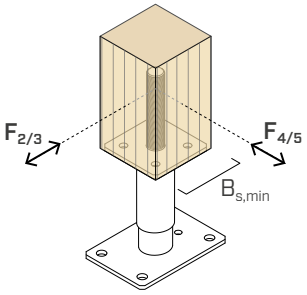

post base		column $B_{s,min}$ [mm]	$R_{2/3\ k\ steel} = R_{4/5\ k\ steel}$ [kN]	γ_{steel}
R10	**R1080M**	80	**1,6**	γ_{M0}
	R10100L	100	**2,1**	
	R10100XL	100	**1,3**	
	R10140XL	140	**1,7**	
R20	**R2080M**	80	**1,6**	γ_{M0}
	R20100L	100	**2,1**	
	R20140XL	140	**1,8**	

ADJUSTMENT METHODS

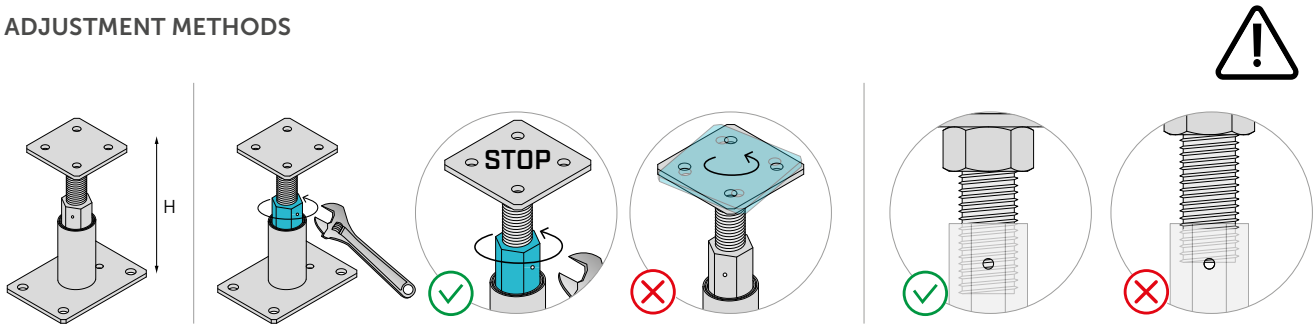

NOTES

(1) γ_{MT} partial coefficient of the timber.

(2) γ_{MC} partial coefficient for connections.

INTELLECTUAL PROPERTY

- Some models of the R10 and R20 post bases are protected by the following Registered Community Designs:
  - RCD 015051914-0002;
  - RCD 015051914-0003.

GENERAL PRINCIPLES

- Characteristic values are consistent with EN 1995-1-1:2014 and in accordance with ETA-10/022. Timber-side tensile strength values are calculated considering the pull-out strength of HBS PLATE EVO and VGS EVO screws parallel to the grain according to ETA-11/0030.
- Design values can be obtained from characteristic values as follows:

$$R_d = min \begin{cases} \frac{R_{i,k\ timber} \cdot k_{mod}}{\gamma_M} \\ \frac{R_{i,k\ steel}}{\gamma_{Mi}} \end{cases}$$

The coefficients k_{mod}, γ_M and γ_{Mi} should be taken according to the current regulations used for the calculation.

- A timber density of ρ_k = 350 kg/m^3 was considered for the calculation process.
- Dimensioning and verification of timber and concrete elements must be carried out separately.

R60

ADJUSTABLE POST BASE

VIDEO

DESIGN REGISTERED

CE ETA-10/0422

ADJUSTABLE
Height adjustable according to functional or aesthetic needs.

RAISED
It ensures spacing from the ground to avoid water splashing or stagnation and provides high durability. Concealed fastening on the timber element.

QUALITY/PRICE
It combines aesthetic performance and low cost, for small structures and non-structural applications.

USA, Canada and more design values available online.

SERVICE CLASS SC1 SC2

MATERIAL

S235 Fe/Zn12c S235 + Fe/Zn12c carbon steel

GROUND CLEARANCE

adjustable from 125 mm to 235 mm

EXTERNAL LOADS

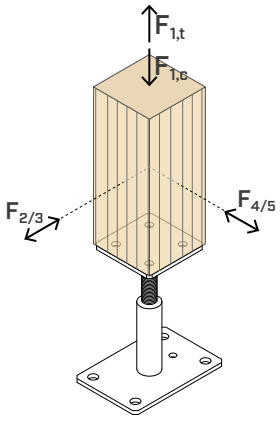

VIDEO
Scan the QR Code and watch the video on our YouTube channel







FIELDS OF USE

Ground joints for columns, with the possibility of adjusting the support height.
Canopies, columns supporting roofs or floors.

Suitable for columns in:
- solid timber softwood and hardwood
- Glulam, LVL





SIMPLE

The cylindrical holder with internal thread combines performance and clean design.

PRACTICAL

The additional hole on the base plate allows simplified screw installation using a long bit.

CODES AND DIMENSIONS

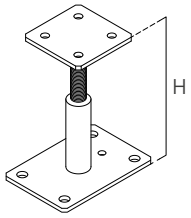

CODE	H [mm] [in]	top plate [mm] [in]	top holes [mm] [in]	bottom plate [mm] [in]	lower holes [mm] [in]	rod Ø [mm] [in]	screws(*)	pcs
R6080M	150 ± 25 *6 ± 1*	80 x 80 x 5 *3 1/8 x 3 1/8 x 0.2*	Ø9,5 *Ø0.37*	140 x 100 x 5 *5 1/2 x 4 x 0.2*	Ø12 *Ø0.47*	M16 *0.63*	HBSPEVO6 VGSEVO9 + HUSEVO8	1
R60100L	200 ± 35 *6 ± 1 3/8*	100 x 100 x 6 *4 x 4 x 0.24*	Ø11,5 *Ø0.45*	160 x 110 x 6 *6 1/4 x 4 3/8 x 0.24*	Ø14 *Ø0.55*	M20 *0.79*	HBSPLEVO8	1

(*)Screws are not included and must be ordered separately.

GEOMETRY

CODE	$B_{s,min}$ [mm]	H [mm]	a x b x s_1 [mm]	$Ø_1$ [mm]	A x B x S_2 [mm]	$Ø_2$ [mm]
R6080M	80	150 ± 25	80 x 80 x 5	Ø9,5	140 x 100 x 5	Ø12
R60100L	100	200 ± 35	100 x 100 x 6	Ø11,5	160 x 110 x 6	Ø14

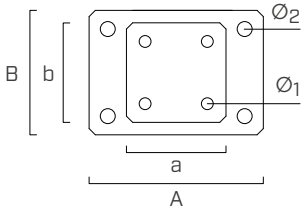

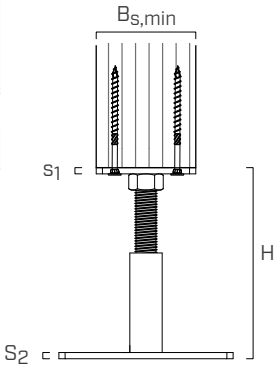

FASTENERS

HBS P EVO - C4 EVO pan head screw

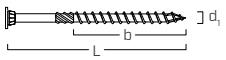

d_1 [mm]	CODE	L [mm]	b [mm]	pcs
6 TX 30	**HBSPEVO680**	80	50	100

HUS EVO - C4 EVO turned washer



CODE	$d_{HBS\ EVO}$ [mm]	$d_{VGS\ EVO}$ [mm]	pcs
HUSEVO8	8	9	50

HBS PLATE EVO - C4 EVO pan head screw

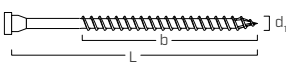

d_1 [mm]	CODE	L [mm]	b [mm]	pcs
8 TX 40	**HBSPLEVO880**	80	55	100
	HBSPLEVO8140	140	110	100

VGS EVO - C4 EVO fully threaded screw with countersunk head

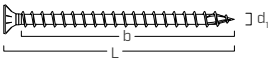

d_1 [mm]	CODE	L [mm]	b [mm]	pcs
9 TX 40	**VGSEVO9120**	120	110	25

type	description		d [mm]	support	page
SKR/SKR EVO	screw-in anchor	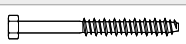	10 - 12		528
AB1	CE1 expansion anchor		10 - 12		536
VIN-FIX	vinyl ester chemical anchor		M10 - M12		545

STRUCTURAL VALUES

COMPRESSION STRENGTH

post base	column $B_{s,min}$ [mm]	$R_{1,c\ k\ timber}$ [kN]	γ_{timber}	$R_{1,c\ k\ steel}$ [kN]	γ_{steel}
R6080M	80	**126,0**	γ_{MT} (1)	**38,6**	γ_{M1}
R60100L	100	**202,0**		**62,3**	

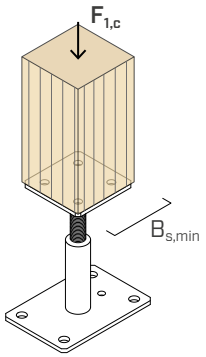

TENSILE STRENGTH

post base	fastening	column $B_{s,min}$ [mm]	$R_{1,t\ k\ timber}$ [kN]	γ_{timber}	$R_{1,t\ k\ steel}$ [kN]	γ_{steel}
R6080M	HBSPEVO680	80	**4,2**	γ_{MC} (2)	**13,2**	γ_{M0}
	VGSEVO9120+HUSEVO8		**13,9**			
R60100L	HBSPLEVO880	100	**6,2**		**11,9**	
	HBSPLEVO8140		**12,4**			

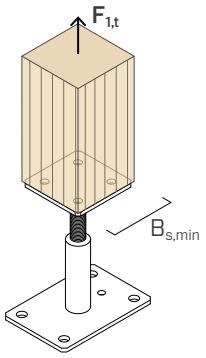

SHEAR STRENGTH

post base	column $B_{s,min}$ [mm]	$R_{2/3\ k\ steel} = R_{4/5\ k\ steel}$ [kN]	γ_{steel}
R6080M	80	**2,42**	γ_{M0}
R60100L	100	**1,98**	

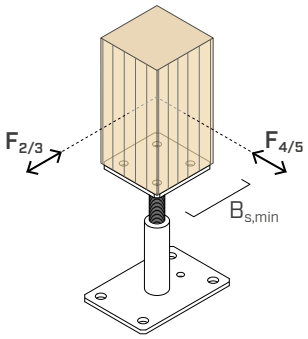

NOTES

(1) γ_{MT} partial coefficient of the timber.

(2) γ_{MC} partial coefficient for connections.

INTELLECTUAL PROPERTY

- R60 post bases are protected by the following Registered Community Designs:
  - RCD 015051914-0004;
  - RCD 015051914-0005.

GENERAL PRINCIPLES

- The characteristic values are according to EN 1995-1-1:2014 and according to ETA-10/022, except for the tensile values calculated considering the pull-out strength of the HBS PLATE EVO and VGS EVO screws parallel to the grain according to ETA-11/0030.
- Design values can be obtained from characteristic values as follows:

$$R_d = min \begin{cases} \frac{R_{i,k\ timber} \cdot k_{mod}}{\gamma_M} \\ \frac{R_{i,k\ steel}}{\gamma_{Mi}} \end{cases}$$

  The coefficients k_{mod}, γ_M and γ_{Mi} should be taken according to the current regulations used for the calculation.
- A timber density of ρ_k = 350 kg/m^3 was considered for the calculation process.
- Dimensioning and verification of timber and concrete elements must be carried out separately.

R40

ADJUSTABLE POST BASE

CE
ETA-10/0422



ADJUSTABLE AFTER INSTALLATION
The height can also be adjusted after assembly is completed, according to functional or aesthetic requirements.

RAISED
Outdistanced from the ground to avoid water splash and stagnation and guarantee high durability. Concealed fastening on the timber element.

DURABILITY
Available in both DAC COAT and AISI304 stainless steel to ensure durability in all situations.

USA, Canada and more design values available online.



SERVICE CLASS

SC1 SC2 SC3

MATERIAL

S235 DAC COAT — S235 carbon steel with special coating DAC COAT

A2 AISI 304 — austenitic stainless steel A2 | AISI304 (CRC II)

GROUND CLEARANCE

adjustable from 35 to 250 mm

EXTERNAL LOADS

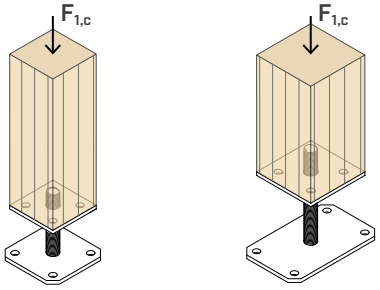



FIELDS OF USE

Ground joints for compressed columns, with the possibility of adjusting the support height after installation.
Canopies, carports, pergolas.

Suitable for columns in:
- solid timber softwood and hardwood
- Glulam, LVL

CODES AND DIMENSIONS

R40 S - Square - square base

S235 DAC COAT

CODE	H [mm] [in]	top plate [mm] [in]	top holes [n. x mm] [n. x in]	bottom plate [mm] [in]	lower holes [n. x mm] [n. x in]	rod Ø x L [mm] [in]	pcs
R40S70	35-100 *1 3/8 - 4*	70 x 70 x 6 *2 3/4 x 2 3/4 x 0.24*	2 x Ø6 *2 x Ø0.24*	100 x 100 x 6 *4 x 4 x 0.24*	4 x Ø11,5 *4 x Ø0.45*	16 x 99 *0.63 x 3 7/8*	1
R40S80	40-100 *1 9/16 - 4*	80 x 80 x 6 *3 1/8 x 3 1/8 x 0.24*	4 x Ø11 *4 x Ø0.43*	100 x 100 x 6 *4 x 4 x 0.24*	4 x Ø11,5 *4 x Ø0.45*	20 x 99 *0.79 x 3 7/8*	1

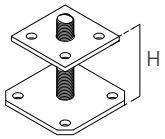

R40 L - Long - rectangular base

S235 DAC COAT

CODE	H [mm] [in]	top plate [mm] [in]	top holes [n. x mm] [n. x in]	bottom plate [mm] [in]	lower holes [n. x mm] [n. x in]	rod Ø x L [mm] [in]	pcs
R40L150	40-150 *1 9/16 - 6*	100 x 100 x 6 *4 x 4 x 0.24*	4 x Ø11 *4 x Ø0.43*	160 x 100 x 6 *6 1/4 x 4 x 0.24*	4 x Ø11,5 *4 x Ø0.45*	20 x 150 *0.79 x 6*	1
R40L250	40-250 *1 9/16 - 10*	100 x 100 x 6 *4 x 4 x 0.24*	4 x Ø11 *4 x Ø0.43*	160 x 100 x 6 *6 1/4 x 4 x 0.24*	4 x Ø11,5 *4 x Ø0.45*	24 x 250 *0.95 x 6*	1

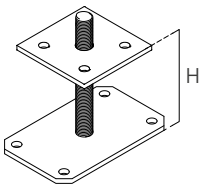

RI40 L A2| AISI304 - Long - rectangular base

A2 AISI 304

CODE	H [mm] [in]	top plate [mm] [in]	top holes [n. x mm] [n. x in]	bottom plate [mm] [in]	lower holes [n. x mm] [n. x in]	rod Ø x L [mm] [in]	pcs
RI40L150	40-150 *1 9/16 - 6*	100 x 100 x 6 *4 x 4 x 0.24*	4 x Ø11 *4 x Ø0.43*	160 x 100 x 6 *6 1/4 x 4 x 0.24*	4 x Ø11,5 *4 x Ø0.45*	20 x 150 *0.79 x 6*	1
RI40L250	40-250 *1 9/16 - 10*	100 x 100 x 6 *4 x 4 x 0.24*	4 x Ø11 *4 x Ø0.43*	160 x 100 x 6 *6 1/4 x 4 x 0.24*	4 x Ø11,5 *4 x Ø0.45*	24 x 250 *0.95 x 6*	1

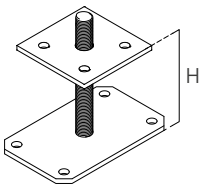

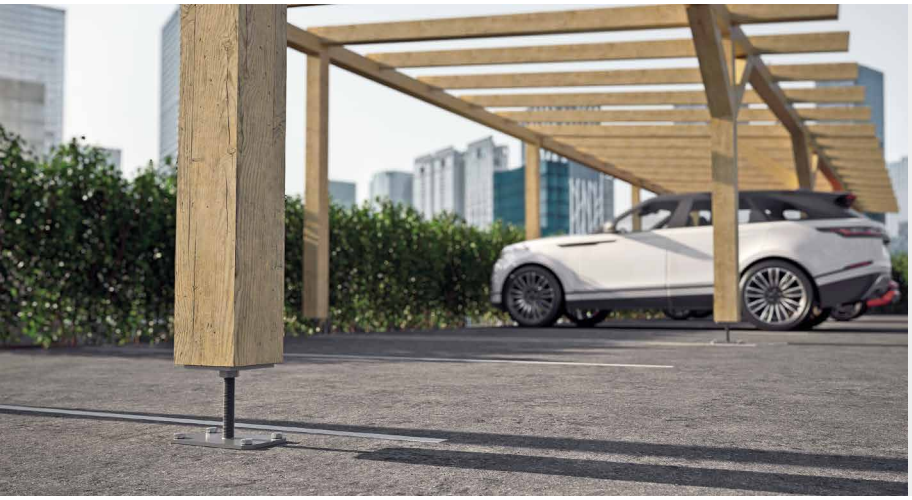

RI40 A2 | AISI304

Available in the rectangular base version also in A2 | AISI304 stainless steel for excellent durability.

STRUCTURAL VALUES

COMPRESSION STRENGTH

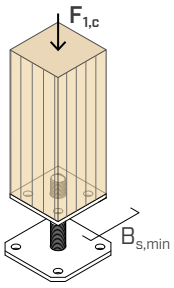

R40 S - Square

CODE	$B_{s,min}$	$R_{1,c\ k\ timber}$		$R_{1,c\ k\ steel}$			
	[mm]	[kN]	γ_{timber}	[kN]	γ_{steel}	[kN]	γ_{steel}
R40S70	80	**50,7**	γ_{MT} (1)	**23,3**	γ_{M0}	**39,6**	γ_{M1}
R40S80	100	**64,0**		**38,1**		**61,8**	

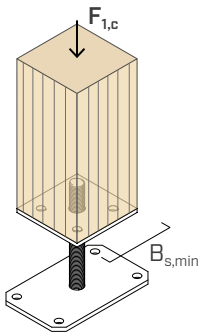

R40 L - Long

CODE	$B_{s,min}$	$R_{1,c\ k\ timber}$		$R_{1,c\ k\ steel}$			
	[mm]	[kN]	γ_{timber}	[kN]	γ_{steel}	[kN]	γ_{steel}
R40L150	100	**100,0**	γ_{MT} (1)	**41,9**	γ_{M0}	**57,1**	γ_{M1}
R40L250	100	**100,0**		**50,7**		**65,3**	

RI40 L A2 | AISI304 - Long

CODE	$B_{s,min}$	$R_{1,c\ k\ timber}$		$R_{1,c\ k\ steel}$			
	[mm]	[kN]	γ_{timber}	[kN]	γ_{steel}	[kN]	γ_{steel}
RI40L150	100	**100,0**	γ_{MT} (1)	**38,8**	γ_{M0}	**47,8**	γ_{M1}
RI40L250	100	**100,0**		**47,1**		**57,0**	

NOTES

(1) y_{MT} partial coefficient of the timber.

UK CONSTRUCTION PRODUCT EVALUATION

- UKTA-0836-22/6374.

GENERAL PRINCIPLES

- Characteristic values are consistent with EN 1995-1-1:2014 and in accordance with ETA-10/022.
- Design values can be obtained from characteristic values as follows:

$$R_d = min \begin{cases} \frac{R_{i,k\ timber} \cdot k_{mod}}{\gamma_M} \\ \frac{R_{i,k\ steel}}{\gamma_{Mi}} \end{cases}$$

The coefficients k_{mod}, γ_M and γ_{Mi} should be taken according to the current regulations used for the calculation.

- A timber density of ρ_k = 350 kg/m^3 was considered for the calculation process.
- Dimensioning and verification of timber and concrete elements must be carried out separately.

R70

EMBEDDED ADJUSTABLE POST BASE

CE
ETA-10/0422



ADJUSTABLE
Height adjustable according to functional or aesthetic needs.

SIMPLE
Fastening is simplified by the absence of a base plate. Simply drill the hole in the concrete and embed the rod using a chemical anchor.

ECONOMICAL
It combines aesthetic performance and low cost, for small structures and non-structural applications.



CODES AND DIMENSIONS

CODE	H [mm] *[in]*	plate [mm] *[in]*	holes [n. x mm] *[n. x in]*	rod Ø x L [mm] *[in]*	pcs
R70100	40-250 *1 9/16 - 10*	100 x 100 x 8 *4 x 4 x 0.31*	4 x Ø11 *4 x Ø0.43*	20 x 350 *0.79 x 13 3/4*	1
R70140	45-350 *1 9/16 - 13 3/4*	140 x 140 x 8 *5 1/2 x 5 1/2 x 0.31*	4 x Ø11 *4 x Ø0.43*	24 x 450 *0.95 x 17 3/4*	1

SERVICE CLASS

SC1 SC2 SC3

MATERIAL

S235 DAC COAT — S235 carbon steel with special coating DAC COAT

GROUND CLEARANCE

adjustable from 40 to 350 mm

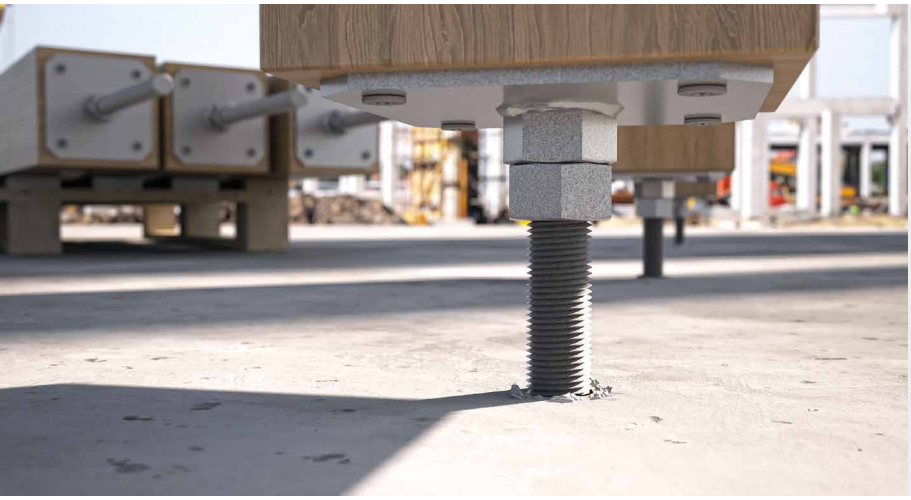

FIELD OF USE

Ground joints for columns, with the possibility of connecting the threaded rod directly to the concrete using a chemical anchor.
Canopies, carports, pergolas

Suitable for columns in:
- solid timber softwood and hardwood
- Glulam, LVL

UK CONSTRUCTION PRODUCT EVALUATION
- UKTA-0836-22/6374.

F70

“T” SHAPED POST BASE

PARTIAL INTERLOCKING
Bending moment resistant for partial bracing of canopies and shelters. Strength and stiffness values tested.

INVISIBLE
The internal knife plate is used to create a totally concealed joint. Designed to accommodate columns of all dimensions. Hot-dip galvanisation and aluminium versions ensure durability in outdoor settings.

TWO VERSIONS
Without holes, to be used with self-drilling dowels; with holes, to be used with smooth dowels or bolts.

ALUMIDI
For compression and shear stress, the ALUMIDI aluminium bracket can be used as a post base with SBD self-drilling dowels.

USA, Canada and more design values available online.



VIDEO

DESIGN REGISTERED

ETA-10/0422

SERVICE CLASS SC1 SC2 SC3

MATERIAL

S235 HDGS5 — **F70** versions **80**, **100**, **140**: carbon steel S235 with hot-dip galvanising 55 µm

S355 HDGS5 — **F70** versions **180** and **220**: S355 carbon steel with hot-dip galvanising 55 µm

S235 HDG — **F70LIFT**: S235 hot dip bright zinc plated carbon steel

alu 6005A — **ALUMIDI**: EN AW-6005A° aluminium alloy

GROUND CLEARANCE

from 21 to 40 mm

EXTERNAL LOADS

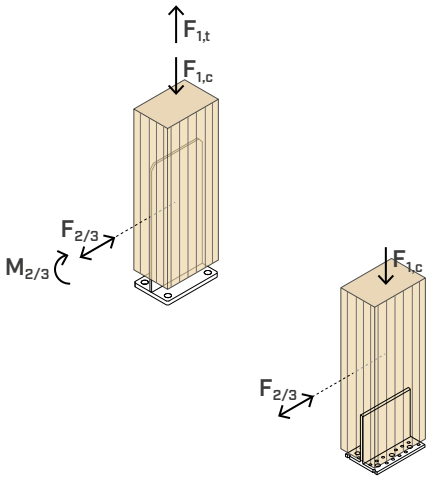

VIDEO
Scan the QR Code and watch the video on our YouTube channel



FIELDS OF USE

Ground joints for moment-resistant columns in one direction.
Pergolas, carports, gazebos.

Suitable for columns in:
- solid timber softwood and hardwood
- Glulam, LVL



VERSATILE

It can be used not only as a post holder but also for the construction of cantilever beams (such as canopies, roofs, etc.).

SPECIAL STRUCTURES

By means of a tension plate and a compression plate, it is possible to produce joints for large glulam columns.

CODES AND DIMENSIONS

F70

CODE	H [mm] *[in]*	bottom plate [mm] *[in]*	base holes [n. x mm] *[n. x in]*	knife plate thickness [mm] *[in]*	pcs
F7080	156 *6 1/8*	80 x 80 x 6 *3 1/8 x 3 1/8 x 0.24*	4 x Ø9 *4 x Ø0.35*	4 *0.16*	1
F70100	206 *8 1/8*	100 x 100 x 6 *4 x 4 x 0.24*	4 x Ø9 *4 x Ø0.35*	6 *0.24*	1
F70140	308 *12 1/8*	140 x 140 x 8 *5 1/2 x 5 1/2 x 0.31*	4 x Ø11,5 *4 x Ø0.45*	8 *0.31*	1
F70180	400 *15 3/4*	180 x 120 x 12 *7 1/8 x 4 3/4 x 0.47*	4 x Ø18 *4 x Ø0.71*	6 *0.24*	1
F70220	400 *15 3/4*	220 x 140 x 15 *8 5/8 x 5 1/2 x 0.59*	4 x Ø18 *4 x Ø0.71*	6 *0.24*	1

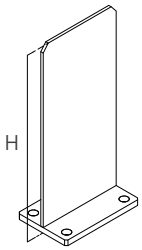

F70 L

CODE	H [mm] *[in]*	bottom plate [mm] *[in]*	base holes [n. x mm] *[n. x in]*	knife plate thickness [mm] *[in]*	knife plate hole [n. x mm] *[n. x in]*	pcs
F70100L	206 *8 1/8*	100 x 100 x 6 *4 x 4 x 0.24*	4 x Ø9 *4 x Ø0.35*	6 *0.24*	6 x Ø13 *6 x Ø0.51*	1
F70140L	308 *12 1/8*	140 x 140 x 8 *5 1/2 x 5 1/2 x 0.31*	4 x Ø11,5 *4 x Ø0.45*	8 *0.31*	8 x Ø13 *8 x Ø0.51*	1
F70180L	400 *15 3/4*	180 x 120 x 12 *7 1/8 x 4 3/4 x 0.47*	4 x Ø18 *4 x Ø0.71*	6 *0.24*	12 x Ø13 *12 x Ø0.51*	1
F70220L	400 *15 3/4*	220 x 140 x 15 *8 5/8 x 5 1/2 x 0.59*	4 x Ø18 *4 x Ø0.71*	6 *0.24*	16 x Ø13 *16 x Ø0.51*	1

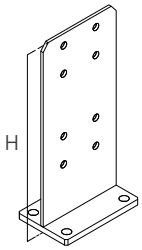

F70 LIFT

CODE	H [mm] *[in]*	plate [mm] *[in]*	thickness [mm] *[in]*	suitable for	pcs
F70100LIFT	20 *13/16*	120 x 120 *4 3/4 x 4 3/4*	2 *0.08*	F70100-F7100L	1
F70140LIFT	22 *7/8*	160 x 160 *6 1/4 x 6 1/4*	2 *0.08*	F70140-F70140L	1

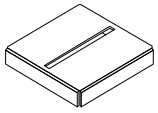

ALUMIDI

CODE	H [mm]	*[in]*	type	L [mm]	*[in]*	pcs
ALUMIDI80	109,4	*4 5/16*	without holes	80	*3 1/8*	25
ALUMIDI120	109,4	*4 5/16*	without holes	120	*4 3/4*	25
ALUMIDI160	109,4	*4 5/16*	without holes	160	*6 1/4*	25
ALUMIDI200	109,4	*4 5/16*	without holes	200	*8*	15
ALUMIDI240	109,4	*4 5/16*	without holes	240	*9 1/2*	15

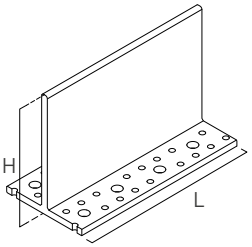

FASTENERS

type	description	d [mm]	support	page
SBD	self-drilling dowel	7,5		154
STA	smooth dowel	12		162
KOS/KOT	hexagonal/round head bolt	M12		168
SKR/SKR EVO	screw-in anchor	7,5 - 8 - 10 - 16		528
AB1	CE1 expansion anchor	M10 - M16		536
ABE A4	CE1 expansion anchor	M8 - M10		534
VIN-FIX	vinyl ester chemical anchor	M8 - M10 - M16		545
HYB-FIX	hybrid chemical anchor	M8 - M10 - M16		552
EPO-FIX	epoxy chemical anchor	M8 - M10 - M16		557

GEOMETRY

F7080

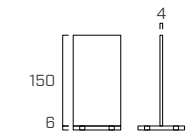

F70100

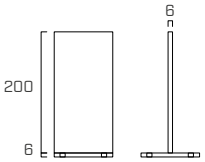

F70140

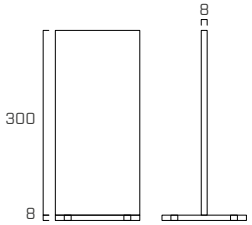

F70180

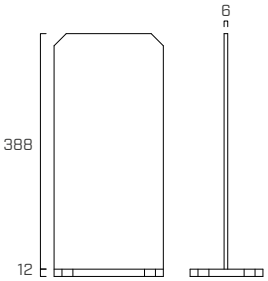

F70220

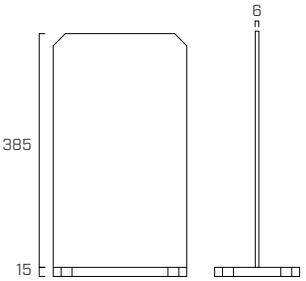

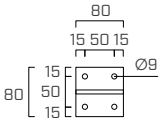

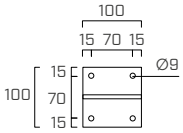

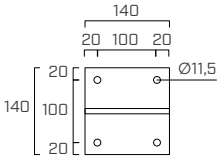

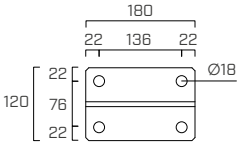

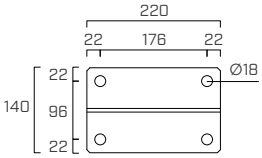

F70100L

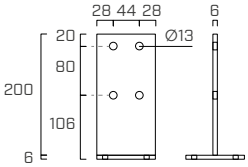

F70140L

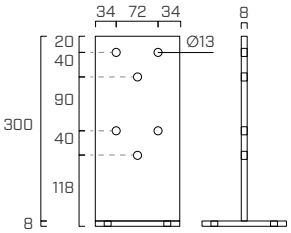

F70180L

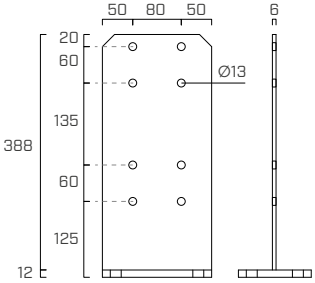

F70220L

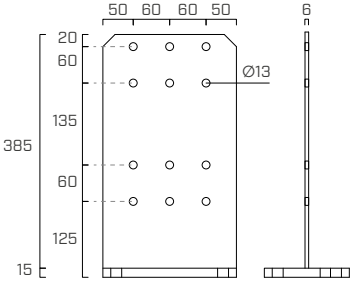

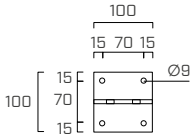

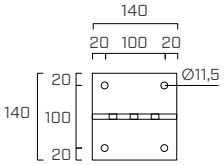

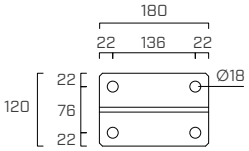

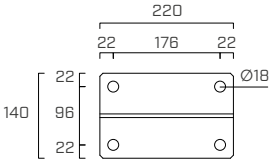

F70100LIFT

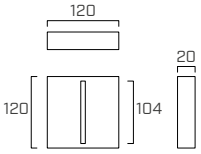

F70140LIFT

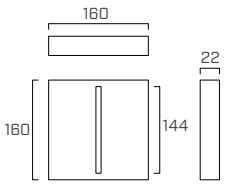

ALUMIDI

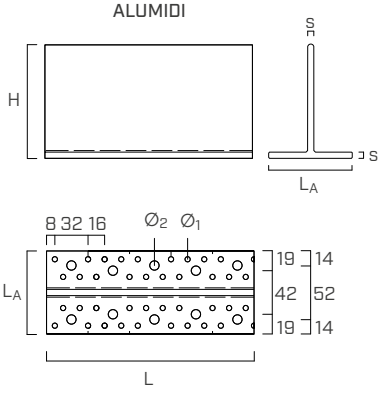

ALUMIDI			
thickness	**s**	[mm]	6
flange width	**L_A**	[mm]	80
height	**H**	[mm]	109,4
small flange-holes	**$Ø_1$**	[mm]	5,0
large flange-holes	**$Ø_2$**	[mm]	9,0

FASTENING CONFIGURATIONS

F70 WITH SBD SELF-DRILLING DOWELS

F7080

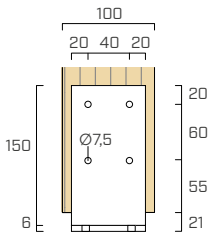

F70100

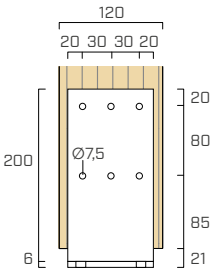

F70140

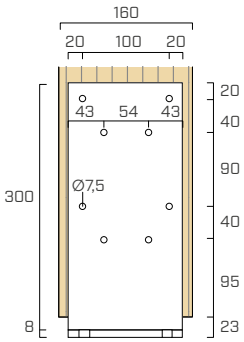

F70180

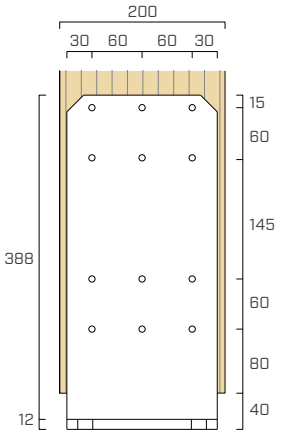

F70220

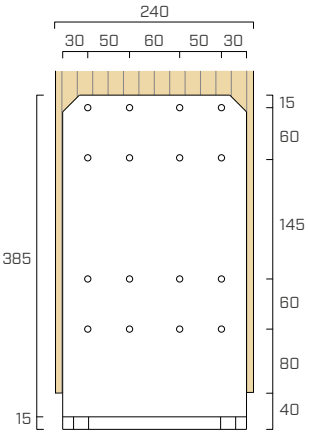

F70 WITH STA SMOOTH DOWELS OR BOLTS

F70100L

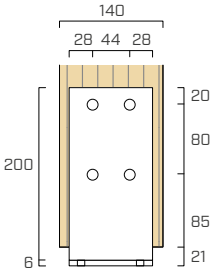

F70140L

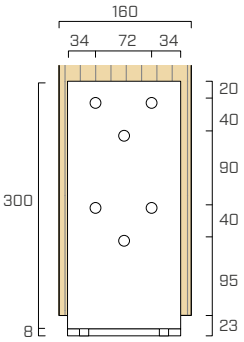

F70180L

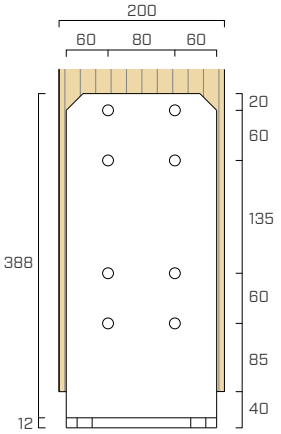

F70220L

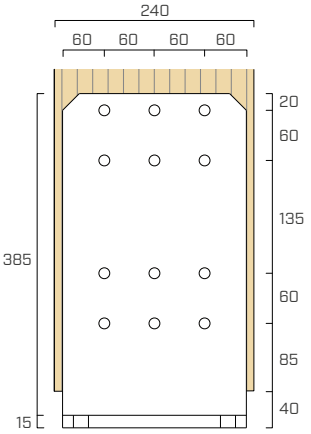

ALUMIDI WITH SBD SELF-DRILLING DOWELS

ALUMIDI80

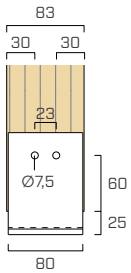

ALUMIDI120

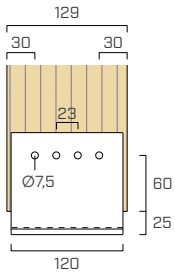

ALUMIDI160

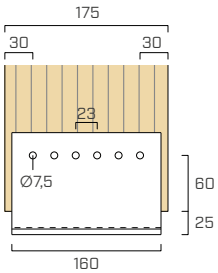

ALUMIDI200

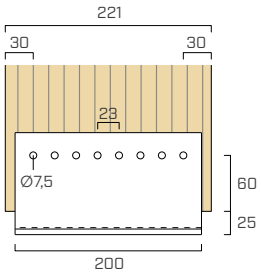

ALUMIDI240

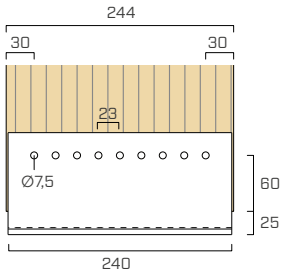

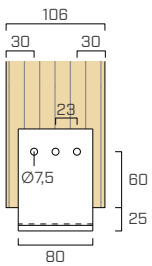

STRUCTURAL VALUES | F70

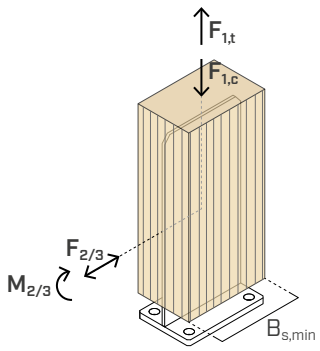

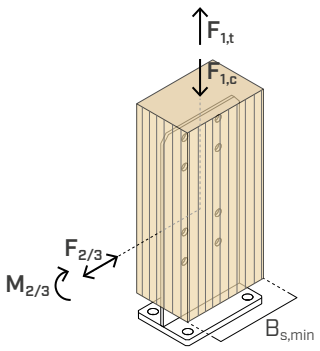

F70

CODE	fasteners for timber SBD Ø7,5(1)	column $B_{s,min}$	COMPRESSION			TENSION			SHEAR		MOMENT		
			$R_{1,c\ k\ timber}$	$R_{1,c\ k\ steel}$		$R_{1,t\ k\ timber}$	$R_{1,t\ k\ steel}$		$R_{2/3,t\ k\ steel}$		$M_{2/3\ k\ timber}$	$M_{2/3\ k\ steel}$	
	pcs - Ø x L [mm]	[mm]	[kN]	[kN]	γ_{steel}	[kN]	[kN]	γ_{steel}	[kN]	γ_{steel}	[kNm]	[kNm]	γ_{steel}
F7080	4-Ø7,5x75	100x100	**29,6**	**32,7**	γ_{M1}	**17,9**	**18,3**	γ_{M0}	**3,4**	γ_{M0}	**1,1**	**0,5**	γ_{M0}
F70100	6-Ø7,5x95	120x120	**59,7**	**67,8**		**59,7**	**15,7**		**3,8**		**2,0**	**2,0**	
F70140	8-Ø7,5x115	160x160	**94,8**	**103,0**		**94,8**	**25,7**		**6,5**		**4,2**	**3,5**	
F70180	12-Ø7,5x155	160x200	**130,0**	**246,0**		**130,0**	**172,0**		**25,9**		**11,3**	**6,5**	
F70220	16-Ø7,5x175	200x240	**190,0**	**307,0**		**190,0**	**237,0**		**45,1**		**17,2**	**11,4**	

F70 L

CODE	fasteners for timber STA Ø12(2)	column $B_{s,min}$	COMPRESSION			TENSION			SHEAR		MOMENT		
			$R_{1,c\ k\ timber}$	$R_{1,c\ k\ steel}$		$R_{1,t\ k\ timber}$	$R_{1,t\ k\ steel}$		$R_{2/3,t\ k\ steel}$		$M_{2/3\ k\ timber}$	$M_{2/3\ k\ steel}$	
	pcs - Ø x L [mm]	[mm]	[kN]	[kN]	γ_{steel}	[kN]	[kN]	γ_{steel}	[kN]	γ_{steel}	[kNm]	[kNm]	γ_{steel}
F70100L	4-Ø12x120	140x140	**55,7**	**67,8**	γ_{M1}	**55,7**	**15,7**	γ_{M0}	**3,8**	γ_{M0}	**2,5**	**2,0**	γ_{M0}
F70140L	6-Ø12x140	160x160	**104,0**	**103,0**		**104,0**	**25,7**		**6,2**		**4,9**	**3,5**	
F70180L	8-Ø12x160	160x200	**115,0**	**246,0**		**115,0**	**172,0**		**25,9**		**10,6**	**6,5**	
F70220L	12-Ø12x180	200x240	**173,0**	**307,0**		**173,0**	**237,0**		**45,1**		**18,0**	**11,4**	

STIFFNESS

CODE	fasteners for timber	configuration	$K_{2/3,ser}$
		pcs - Ø [mm]	[kNm/rad]
F70100	SBD	6 - Ø7,5	60
F70140		8 - Ø7,5	190
F70180		12 - Ø7,5	640
F70220		16 - Ø7,5	900
F70100L	STA	4 - Ø12	50
F70140L		6 - Ø12	190
F70180L		8 - Ø12	580
F70220L		12 - Ø12	700

NOTES and **GENERAL PRINCIPLES** see page 474.

STRUCTURAL VALUES | ALUMIDI

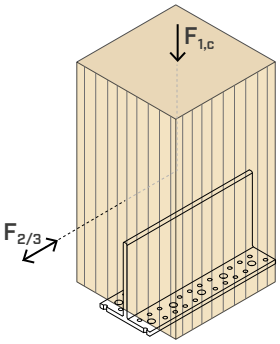

				COMPRESSION
CODE	L	fasteners for timber SBD Ø7,5[1]	column $B_{s,min}$	$R_{1,c\,k}$
	[mm]	pcs - Ø x L [mm]	[mm]	[kN]
ALUMIDI80	80	2-Ø7,5x75	83	**16,4**
ALUMIDI80	80	3-Ø7,5x95	106	**27,5**
ALUMIDI120	120	4-Ø7,5x115	129	**43,9**
ALUMIDI160	160	6-Ø7,5x155	175	**72,1**
ALUMIDI200	200	8-Ø7,5x195	221	**110,9**
ALUMIDI240	240	9-Ø7,5x235	244	**160,0**

				SHEAR
CODE	L	fasteners for timber SBD Ø7,5[1]	column $B_{s,min}$	$R_{2/3\,k}$
	[mm]	pcs - Ø x L [mm]	[mm]	[kN]
ALUMIDI80	80	2-Ø7,5x75	83	**11,6**
ALUMIDI80	80	3-Ø7,5x95	106	**21,1**
ALUMIDI120	120	4-Ø7,5x115	129	**33,1**
ALUMIDI160	160	5-Ø7,5x155	175	**46,3**
ALUMIDI200	200	7-Ø7,5x195	221	**74,4**
ALUMIDI240	240	8-Ø7,5x235	244	**96,2**

NOTES

[1] SBD self-drilling dowels Ø7,5:
- L = 75 mm: M_{yk} = 42000 Nmm;
- L ≥ 95mm: M_{yk} = 75000 Nmm.

[2] STA smooth dowels Ø12, M_{yk} = 69100 Nmm. The strength values are also valid in case of alternative fastening using M12 bolts according to ETA-10/0422.

GENERAL PRINCIPLES

- Characteristic values are consistent with EN 1995-1-1:2014, in accordance with ETA-10/0422 (F70) and ETA-09/0361 (ALUMIDI).
- Design values can be obtained from characteristic values as follows:

$$R_{d,F70} = min\begin{cases}\frac{R_{i,k\ timber} \cdot k_{mod}}{\gamma_{MC}} \\ \frac{R_{i,k\ steel}}{\gamma_{Mi}}\end{cases} \qquad R_{i,d\ ALUMIDI} = \frac{R_{i,k} \cdot k_{mod}}{\gamma_{MC}}$$

  The coefficients k_{mod}, γ_M and γ_{Mi} should be taken according to the current regulations used for the calculation.
- The strength values indicated in the table are valid in compliance with the fasteners positioning and the timber column according to the configurations indicated.
- Resistance values for the fastening system are valid for the calculation examples shown in the table. In ALUMIDI, the distance value $a_{3,c}$ = 60 mm is valid if the following stress condition is met: $F_{2/3} \leq F_{1,c}$.
- In ALUMIDI, install the anchors 2 by 2 starting from the top. Consider a minimum number of 4 anchors.
- In the ALUMIDI, the values provided are calculated with a 8 mm thick routing in the timber, while in the F70s, a routing of s + 2 mm was considered (where s refers to the thickness of the blade of the post base).
- The moment and shear strength values are calculated individually not taking into account the stabilizing contributions, if any, deriving from the compressive stress that influence the overall strength of the connection. In case of combined loading the verification must be carried out separately. Refer to ETA-10/0422 (F70) and ETA-09/0361 (ALUMIDI).
- For the calculation process a timber characteristic density ρ_k = 350 kg/m^3 has been considered.
- Dimensioning and verification of timber and concrete elements must be carried out separately.

INTELLECTUAL PROPERTY

- Some models of F70 post bases are protected by the following Registered Community Designs:
  - RCD 015032190-0014;
  - RCD 015032190-0015.

UK CONSTRUCTION PRODUCT EVALUATION

- UKTA-0836-22/6374.

MOUNTING

F70 or ALUMIDI with SBD self-drilling dowels

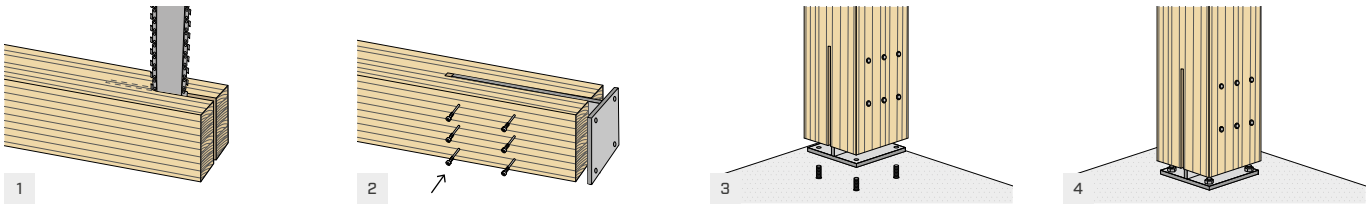

F70 L with STA dowels

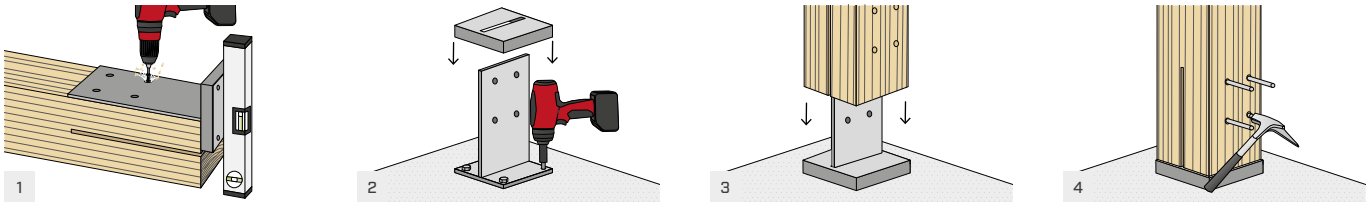

ASSEMBLY WITH POSSIBILITY OF ADJUSTMENT

As an alternative to classic positioning, it is possible to assemble the product by levelling it as follows:

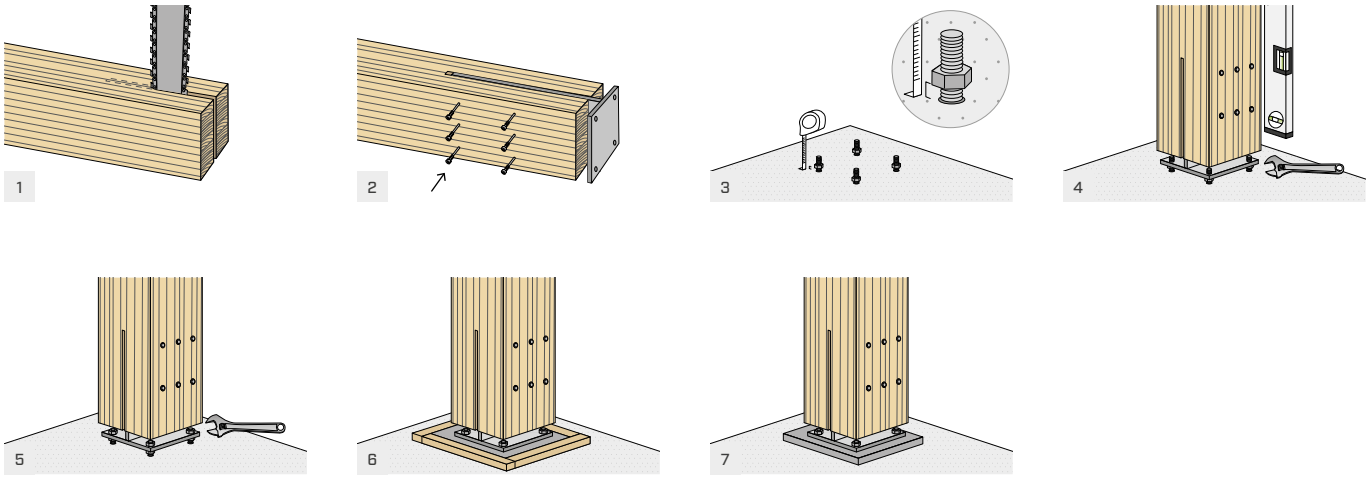

X10

CROSS-SHAPED POST BASE

VIDEO

CE
ETA-10/0422

PARTIAL INTERLOCKING IN TWO DIRECTIONS

Resistant to bending moment in both directions, for the creation of a partial interlocking in the bracing of canopies and shelters. Strength and stiffness values tested.

TWO VERSIONS

Without holes for use with self drilling dowels, smooth dowels or bolts; with holes, for use with XEPOX epoxy adhesive. Both versions are hot-dip galvanised for maximum durability in outdoor settings.

CONCEALED JOINT

Totally concealed installation. Different strength levels depending on the fastening configuration selected.

USA, Canada and more design values available online.

SERVICE CLASS SC1 SC2 SC3

MATERIAL

S235 HDG55 S235 carbon steel with hot galvanising 55 µm

GROUND CLEARANCE

from 46 to 50 mm

EXTERNAL LOADS

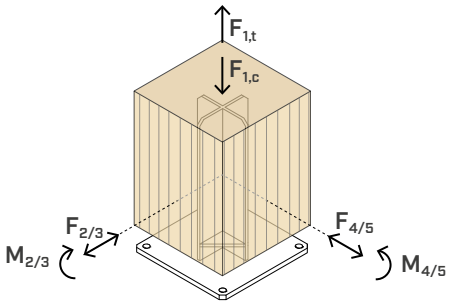

VIDEO
Scan the QR Code and watch the video on our YouTube channel





FIELDS OF USE

Ground joints for moment-resistant columns in both directions.
Pergolas, carports, gazebos.

Suitable for columns in:

- solid timber softwood and hardwood
- glulam, LVL





FREE STRUCTURES

The base constraint can absorb horizontal loads allowing to realize pergolas or gazebos which do not require bracings and are open on all sides.

XEPOX

The cross shaped configuration and the fastener disposition are designed to guarantee a moment-resisting capacity, creating a semi-rigid constraint at the base.

CODES AND DIMENSIONS

XS10 - fastening with dowels or bolts

CODE	bottom plate [mm] *[in]*	lower holes [n. x mm] *[n. x in]*	H [mm] *[in]*	knife plate thickness [mm] *[in]*	cross shaped blades	pcs
XS10120	220 x 220 x 10 *8 5/8 x 8 5/8 x 0.39*	4 x Ø13 *4 x Ø0.51*	310 *12 3/16*	6 *0.24*	smooth	1
XS10160	260 x 260 x 12 *10 1/4 x 10 1/4 x 0.47*	4 x Ø17 *4 x Ø0.67*	312 *12 5/16*	8 *0.31*	smooth	1

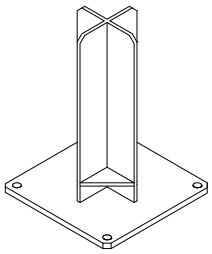

XR10 - fastening with resin for wood

CODE	bottom plate [mm] *[in]*	lower holes [n. x mm] *[n. x in]*	H [mm] *[in]*	knife plate thickness [mm] *[in]*	cross shaped blades	pcs
XR10120	220 x 220 x 10 *8 5/8 x 8 5/8 x 0.39*	4 x Ø13 *4 x Ø0.51*	310 *12 3/16*	6 *0.24*	holes Ø8 *holes Ø0.31*	1

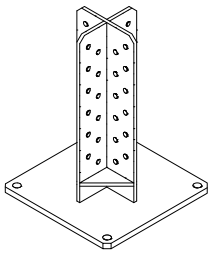

Not holding CE marking.

GEOMETRY

XS10120

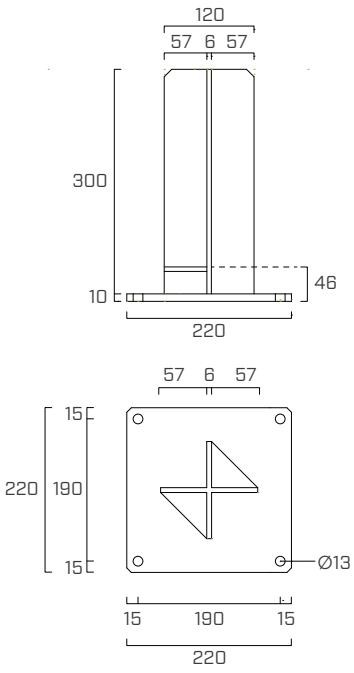

XS10160

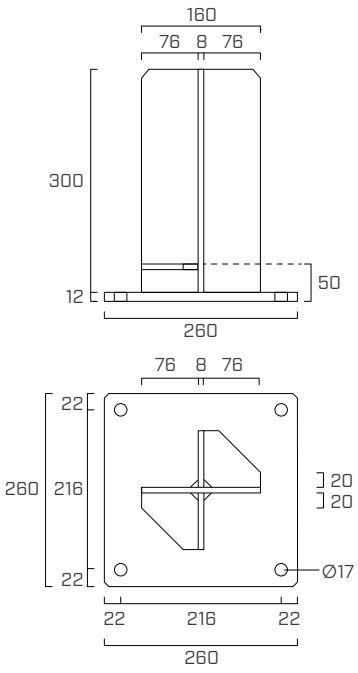

XR10120

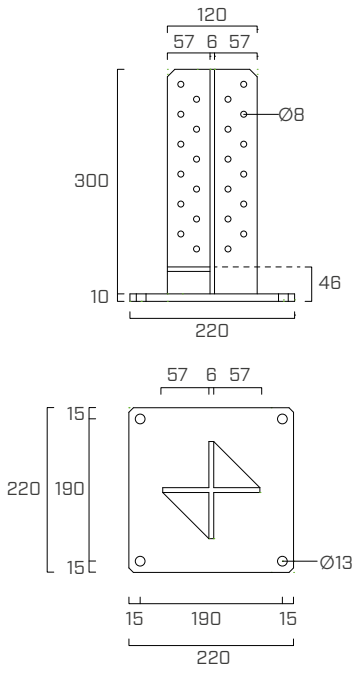

ADDITIONAL PRODUCTS - FASTENING

type	description		d [mm]	support	page
SBD	self-drilling dowel		7,5		154
STA	smooth dowel		12		162
KOS	hexagonal head bolt	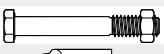	M12		168
XEPOX F	epoxy adhesive		-		136
AB1	CE1 expansion anchor		12-16		536
SKR/SKR EVO	screw-in anchor	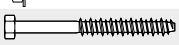	12-16		528
ABE	CE1 expansion anchor	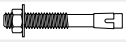	M12 - M16		532
VIN-FIX	vinyl ester chemical anchor	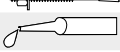	M12-M16		545
HYB-FIX	hybrid chemical anchor	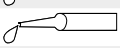	M12-M16		552
EPO-FIX	epoxy chemical anchor	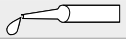	M12-M16		557

XS10 FASTENING CONFIGURATIONS

XS10120

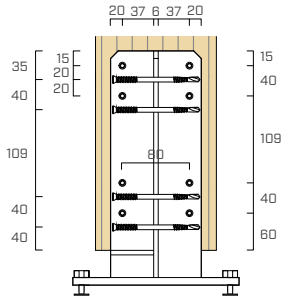

S1 - SBD

SBD self-drilling dowels

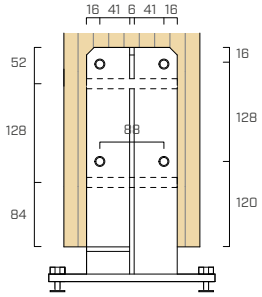

S1 - STA

smooth dowels STA

XS10160

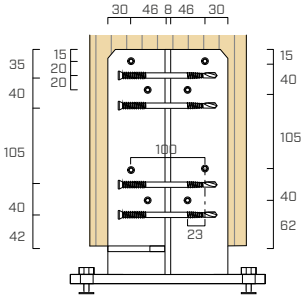

S2 - SBD

SBD self-drilling dowels

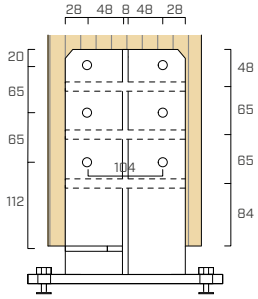

S2 - STA

smooth dowels STA

STRUCTURAL VALUES

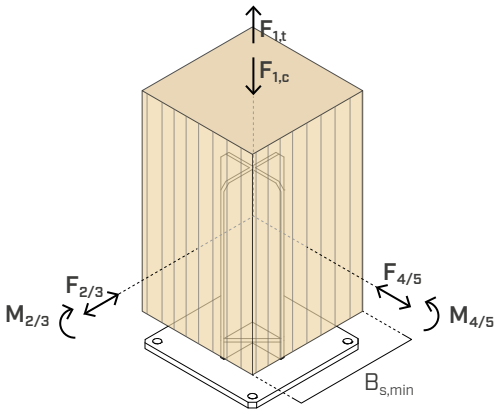

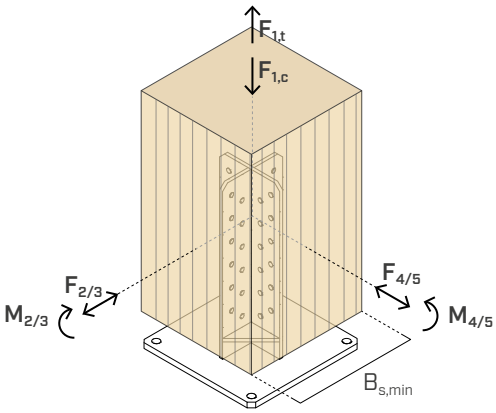

XS10

CODE	config.	fasteners for timber		column	COMPRESSION	TENSION		SHEAR[1][2]		MOMENT[1]		
		type	pcs - Ø x L [mm]	$B_{s,min}$ [mm]	$R_{1,c\ k\ timber}$ [kN]	$R_{1,t\ k\ steel}$ [kN]	γ_{steel}	$R_{2/3\ k\ steel} = R_{4/5\ k\ steel}$ [kN]	γ_{steel}	$M_{2/3\ k\ timber} = M_{4/5\ k\ timber}$ [kNm]	$M_{2/3\ k\ steel} = M_{4/5\ k\ steel}$ [kNm]	γ_{steel}
XS10120	S1 - SBD[4]	SBD Ø7,5	16 - Ø7,5 x 115	140 x 140	134,0	32,6	γ_{M0}	4,0	γ_{M0}	3,0	5,9	γ_{M0}
			16 - Ø7,5 x 135	160 x 160	154,0	32,6		4,0		3,3	5,9	
	S1 - STA	STA Ø12	8 - Ø12 x 120	160 x 160	125,0	32,6		4,0		2,1	5,9	
XS10160	S2 - SBD[4]	SBD Ø7,5	16 - Ø7,5 x 135	160 x 160	205,0	59,0	γ_{M0}	8,0	γ_{M0}	3,3	11,5	γ_{M0}
			16 - Ø7,5 x 155	200 x 200	224,0	59,0		8,0		3,7	11,5	
	S2 - STA	STA Ø12	12 - Ø12 x 160	200 x 200	182,0	59,0		8,3		6,7	11,5	

XR10

CODE	fastening	column	COMPRESSION	TENSION		SHEAR[1][2]		MOMENT[1]		
	type	$B_{s,min}$ [mm]	$R_{1,c\ k\ timber}$ [kN]	$R_{1,t\ k\ steel}$ [kN]	γ_{steel}	$R_{2/3\ k\ steel} = R_{4/5\ k\ steel}$ [kN]	γ_{steel}	$M_{2/3\ k\ timber} = M_{4/5\ k\ timber}$ [kNm]	$M_{2/3\ k\ steel} = M_{4/5\ k\ steel}$ [kNm]	γ_{steel}
XR10120	XEPOX adhesive[3]	160 x 160	105,0	32,6	γ_{M0}	4,0	γ_{M0}	4,4	5,9	γ_{M0}

NOTES and GENERAL PRINCIPLES see page 480.

STIFFNESS

CODE	fasteners for timber	configuration pcs - Ø [mm]	$K_{2/3,ser} = K_{4/5,ser}$ [kNm/rad]
XS10120	S1 - SBD	16 - Ø7,5	55
	S2 - STA	8 - Ø12	140
XS10160	S1 - SBD	16 - Ø7,5	350
	S2 - STA	12 - Ø12	160

MOUNTING

VIDEO

XS10

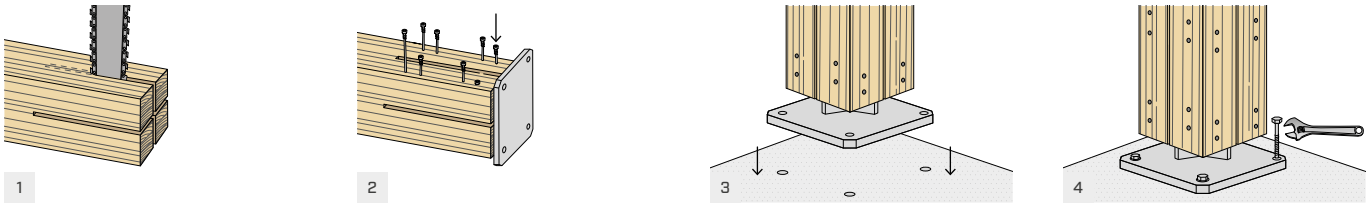

XR10

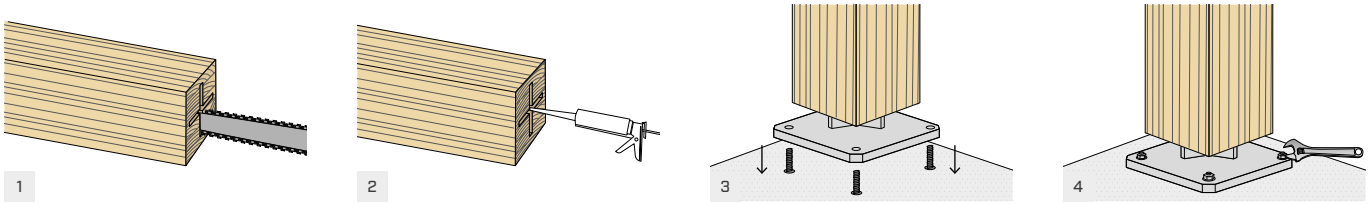

NOTES

(1) Provide orthogonal reinforcement to the grain for each load direction, installing 2 screws VGZ Ø7 x $B_{s,min}$ above the vertical flanges.

(2) Limit value of the bottom plate for shear stress application at a height of e = 220 ÷ 230 mm.

(3) We recommend using XEPOX F. The amount of resin required depends on the thickness of the routing:

- 0,4L for 8mm routing;
- 0,6L for 10mm routing;
- 0,8L for 12mm routing.

The values are obtained with a waste coefficient of 1.4.

(4) SBD self-drilling dowels Ø7,5: M_{yk} = 75000 Nmm.

GENERAL PRINCIPLES

- The strength values indicated in the table are valid in compliance with the fasteners installation according to the configurations indicated.
- Characteristic values are consistent with EN 1995-1-1:2014 and in accordance with ETA-10/0422 (XS10).
- The design values are obtained as follows:

$$R_d = min \begin{cases} \frac{R_{i,k\ timber} \cdot k_{mod}}{\gamma_M} \\ \frac{R_{i,k\ steel}}{\gamma_{Mi}} \end{cases}$$

The coefficients k_{mod}, γ_M and γ_{Mi} should be taken according to the current regulations used for the calculation.

The verification of the fastener-to-concrete connection must be carried out separately.

- The moment and shear strength values are calculated individually not taking into account the stabilizing contributions, if any, deriving from the compressive stress that influence the overall strength of the connection. In case of combined loading the verification must be carried out separately.
- A timber density of ρ_k = 350 kg/m^3 was considered for the calculation process.
- Dimensioning and verification of timber and concrete elements must be carried out separately.
- Consider a milling in the timber with a thickness of 8mm for XS10120 and 10mm for XS10160.

UK CONSTRUCTION PRODUCT EVALUATION

- UKTA-0836-22/6374.

If well protected, timber lasts forever

The ideal ground connection waterproofing?
Products designed to solve thermal bridges and to protect against rising damp, radon, air. Problems you can solve with profiles, membranes, barriers and sheaths from Rothoblaas.



Protect your timber construction, discover the best way to handle your ground connection:

rothoblaas.com

rothoblaas

Solutions for Building Technology

S50

HIGHLY-RESISTANT POST BASE

VIDEO

CE
ETA-10/0422

MIGHTY
Characteristic compression strength of more than 300 kN. Ideal for large columns.

RAISED
It ensures spacing from the ground to avoid water splashing or stagnation and provides high durability. Hot-dip galvanisation ensures durability in outdoor contexts.

ATTENTION TO DETAILS
The base features four auxiliary holes for inserting screws using a long bit.

USA, Canada and more design values available online.

SERVICE CLASS SC1 SC2 SC3

MATERIAL

S235 HDG55 — S235 carbon steel with hot galvanising 55 µm

GROUND CLEARANCE

from 144 to 272 mm

EXTERNAL LOADS

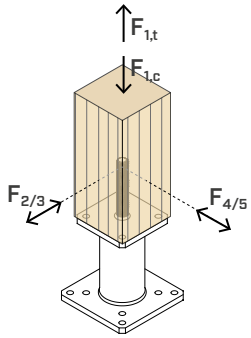

VIDEO
Scan the QR Code and watch the video on our YouTube channel



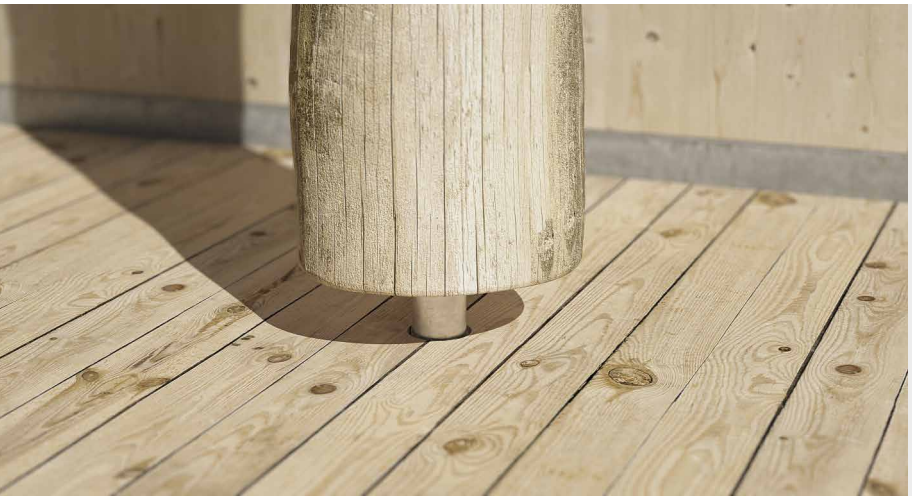

FIELDS OF USE

Ground joints for compressed columns.
Canopies, columns supporting roofs or floors.

Suitable for columns in:
- solid timber softwood and hardwood
- glulam, LVL





HEAVY STRUCTURES

Ideal for transferring high compression forces deriving from large columns.
Excellent durability of the column thanks to the tubular that generates the riser.

TOLERANCE

The height can be adjusted with a nut and lock nut system, adding bedding grout after installation.

CODES AND DIMENSIONS

CODE	H [mm] [in]	P [mm] [in]	top plate [mm] [in]	top holes [n. x mm] [n. x in]	bottom plate [mm] [in]	lower holes [n. x mm] [n. x in]	rod Ø x L [mm] [in]	pcs
S50120120	144 *5 11/16*	120 *4 3/4*	120 x 120 x 12 *4 3/4 x 4 3/4 x 0.47*	4 x Ø12 *4 x Ø0.47*	160 x 160 x 12 *6 1/4 x 6 1/4 x 0.47*	4 x Ø13 *4 x Ø0.51*	M20 x 120 *0.79 x 4 3/4*	1
S50120180	204 *8 1/16*	180 *7 1/8*	120 x 120 x 12 *4 3/4 x 4 3/4 x 0.47*	4 x Ø12 *4 x Ø0.47*	160 x 160 x 12 *6 1/4 x 6 1/4 x 0.47*	4 x Ø13 *4 x Ø0.51*	M20 x 120 *0.79 x 4 3/4*	1
S50160180	212 *8 3/8*	180 *7 1/8*	160 x 160 x 16 *6 1/4 x 6 1/4 x 0.63*	4 x Ø12 *4 x Ø0.47*	200 x 200 x 16 *8 x 8 x 0.63*	4 x Ø13 *4 x Ø0.51*	M24 x 150 *0.79 x 6*	1
S50160240	272 *10 11/16*	240 *9 1/2*	160 x 160 x 16 *6 1/4 x 6 1/4 x 0.63*	4 x Ø12 *4 x Ø0.47*	200 x 200 x 16 *8 x 8 x 0.63*	4 x Ø13 *4 x Ø0.51*	M24 x 150 *0.79 x 6*	1

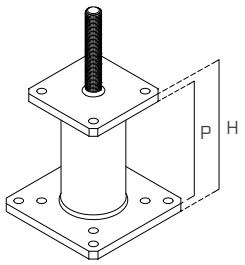

FASTENERS

HBS PLATE EVO - C4 EVO pan head screw

CODE	d_1 [mm]	L [mm]	b [mm]	TX	pcs
HBSPLEVO880	8	80	55	TX 40	100

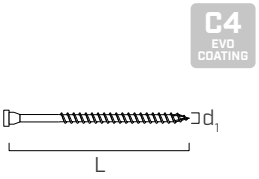

VGS EVO - C4 EVO fully threaded screw with countersunk head

CODE	d_1 [mm]	L [mm]	b [mm]	TX	pcs
VGSEVO11100	11	100	90	TX 50	25

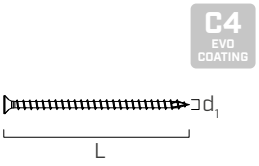

HUS A4 - C4 EVO turned washer

CODE	$d_{VGS\ EVO}$ [mm]	pcs
HUS10A4	11	50



type	description		d [mm]	support	page
HBS PLATE EVO	C4 EVO pan head screw		8		573
SKR/SKR EVO	screw-in anchor		12		528
AB1	CE1 expansion anchor		12		536
ABE A4	CE1 expansion anchor		M12		534
VIN-FIX	vinyl ester chemical anchor		M12		545

GEOMETRY

S50120120
S50120180

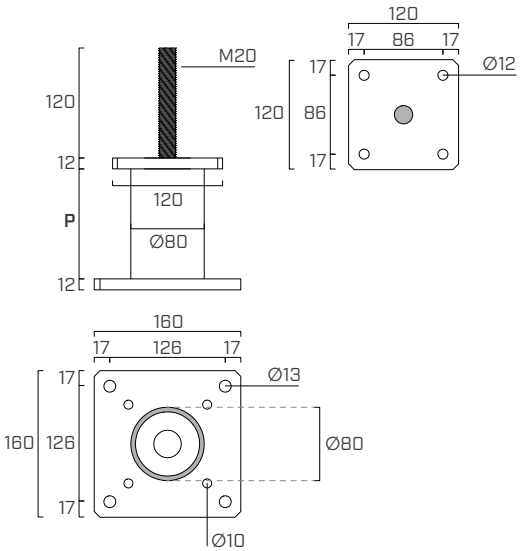

S50160180
S50160240

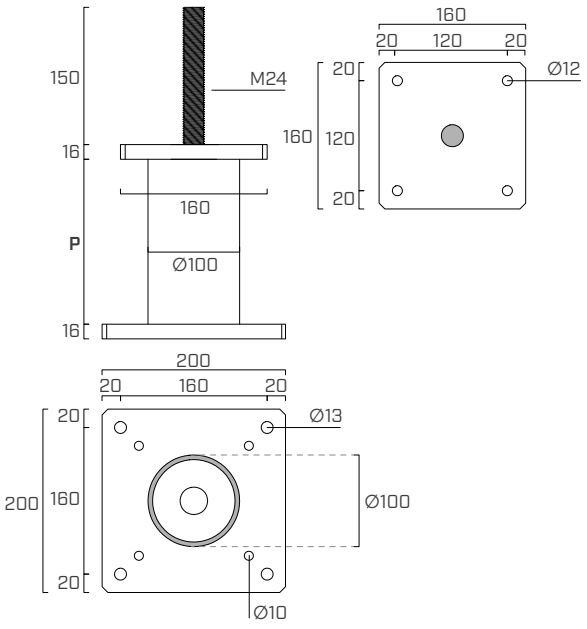

MOUNTING

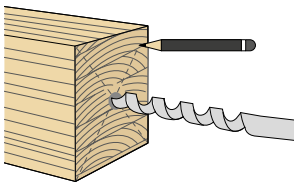

1

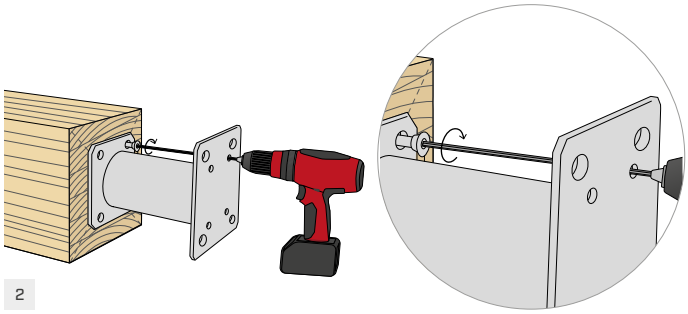

2

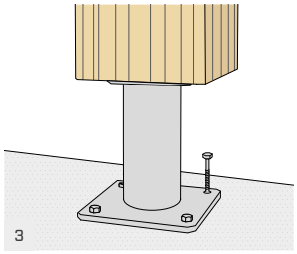

3

STRUCTURAL VALUES

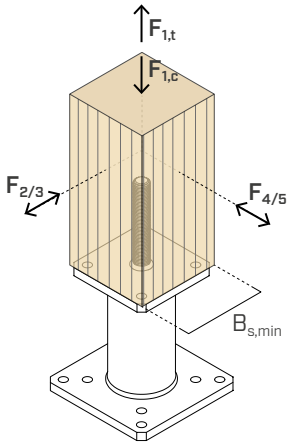

		COMPRESSION			
CODE	$B_{s,min}$	$R_{1,c\ k\ timber}$		$R_{1,c\ k\ steel}$	
	[mm]	[kN]	γ_{timber}	[kN]	γ_{steel}
S50120120	120 x 120	**200,0**	γ_{MT} [1]	**157,0**	γ_{M0}
S50120180		**200,0**		**157,0**	
S50160180	160 x 160	**334,0**		**268,0**	
S50160240		**334,0**		**268,0**	

			TENSION		SHEAR	
CODE	fasteners for timber		$R_{1,t\ k\ timber}$		$R_{2/3\ k\ timber} = R_{4/5\ k\ timber}$	
	type	pcs - Ø x L [mm]	[kN]	γ_{timber}	[kN]	γ_{timber}
S50120120 **S50120180** **S50160180** **S50160240**	HBS PLATE EVO Ø8	4 - Ø8x80	**6,2**	γ_{MC} [2]	**9,7**	γ_{MC} [2]
	VGS EVO Ø11+HUS10A4	4 - Ø11x150 [3]	**21,6**		**20,9**	

NOTES

[1] γ_{MT} partial coefficient of the timber.

[2] γ_{MC} partial coefficient for connections.

[3] Screw not compatible with post base S50120120.

GENERAL PRINCIPLES

- Characteristic values are consistent with EN 1995-1-1:2014 and in accordance with ETA-10/0422.
- Design values can be obtained from characteristic values as follows:

$$R_d = min \begin{cases} \frac{R_{i,k\ timber} \cdot k_{mod}}{\gamma_M} \\ \frac{R_{i,k\ steel}}{\gamma_{Mi}} \end{cases}$$

The coefficients k_{mod}, γ_M and γ_{Mi} should be taken according to the current regulations used for the calculation.

The verification of the fastener-to-concrete connection must be carried out separately.

- A timber density of ρ_k = 350 kg/m^3 was considered for the calculation process.
- Dimensioning and verification of timber and concrete elements must be carried out separately.

UK CONSTRUCTION PRODUCT EVALUATION

- UKTA-0836-22/6374.

P10 - P20

EMBEDDED TUBULAR POST BASE

VIDEO

CE
ETA-10/0422

RAISED
To be embedded in concrete, it allows the column to be separated from the ground. Hot-dip galvanising for P10 models and DAC COAT coating for P20 models ensure maximum durability in outdoor environments.

HEIGHT
It is possible to distance the column from the ground by more than 300 mm for excellent durability, in compliance with national standards such as DIN68800.

ADJUSTABLE AFTER INSTALLATION
In the P20 version, the height can be adjusted even after assembly is completed.

USA, Canada and more design values available online.



SERVICE CLASS SC1 SC2 SC3

MATERIAL

S235 HDG55 **P10:** S235 carbon steel with hot galvanising 55 µm

S235 DAC COAT **P20:** S235 carbon steel with special coating DAC COAT

GROUND CLEARANCE

from 193 to 326 mm

EXTERNAL LOADS

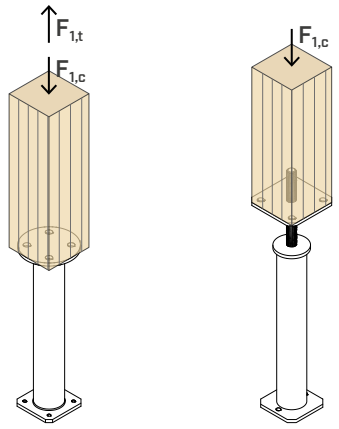

VIDEO
Scan the QR Code and watch the video on our YouTube channel



FIELDS OF USE

Ground joints for columns requiring high spacing.

Suitable for columns in:
- solid timber softwood and hardwood
- glulam, LVL





BALCONIES AND TERRACES

Ideal for creating high durability concealed joints for outdoor wooden columns.

PROFESSIONAL INSTALLATION

The timber-to-ground distance of more than 300 mm allows for professional and particularly durable supports.

CODES AND DIMENSIONS

P10

S235 HDG55

CODE	H [mm] [in]	P [mm] [in]	top plate [mm] [in]	top holes [n. x mm] [n. x in]	bottom plate [mm] [in]	pcs
P10300	312 *12 5/16*	300 *11 3/4*	Ø100 x 6 *Ø3.94 x 0.24*	4 x Ø11 *4 x Ø0.43*	80 x 80 x 6 *3 1/8 x 3 1/8 x 0.24*	1
P10500	512 *20 3/16*	500 *19 3/4*	Ø100 x 6 *Ø3.94 x 0.24*	4 x Ø11 *4 x Ø0.43*	80 x 80 x 6 *3 1/8 x 3 1/8 x 0.24*	1

Screws are not included and must be ordered separately.

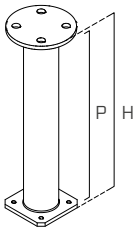

P20

S235 DAC COAT

CODE	H [mm] [in]	P [mm] [in]	top plate [mm] [in]	top holes [n. x mm] [n. x in]	bottom plate [mm] [in]	rod Ø x L [mm] [in]	pcs
P20300	312 *12 5/16*	300 *11 3/4*	100 x 100 x 8 *4 x 4 x 0.31*	4 x Ø11 *4 x Ø0.43*	80 x 80 x 6 *3 1/8 x 3 1/8 x 0.24*	M24 x 170 *0.95 x 6 3/4*	1
P20500	512 *20 3/16*	500 *19 3/4*	100 x 100 x 8 *4 x 4 x 0.31*	4 x Ø11 *4 x Ø0.43*	80 x 80 x 6 *3 1/8 x 3 1/8 x 0.24*	M24 x 170 *0.95 x 6 3/4*	1

Screws are not included and must be ordered separately.

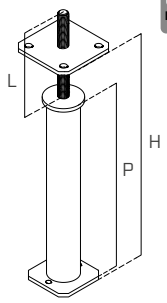

GEOMETRY

P10

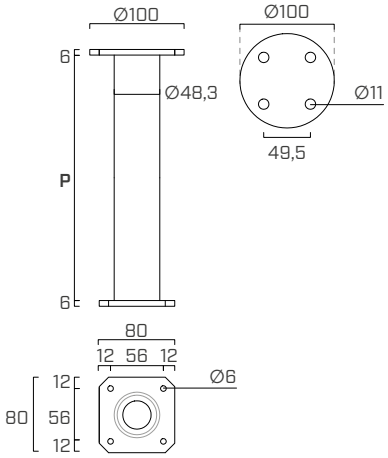

P20

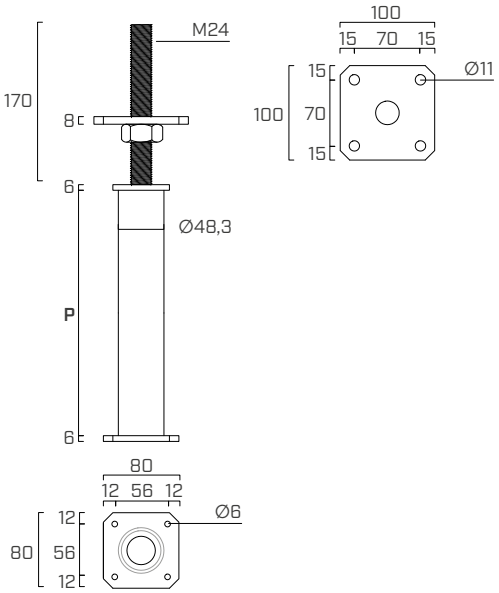

FASTENERS

C4 EVO COATING

HBS PLATE EVO - C4 EVO pan head screw

CODE	d_1 [mm]	L [mm]	b [mm]	TX	pcs
HBSPLEVO880	8	80	55	TX 40	100

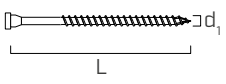

INSTALLATION ON CONCRETE

	CODE	H	H_{min}	a_{max} (*)	D_{max}
		[mm]	[mm]	[mm]	[mm]
P10	**P10300**	312	156	-	**156**
	P10500	512	256	-	**256**
P20	**P20300**	312	156	70	**193-226**
	P20500	512	256	70	**293-326**

(*) a_{min} ≈ 35÷40 mm (top plate + nut + welding space).

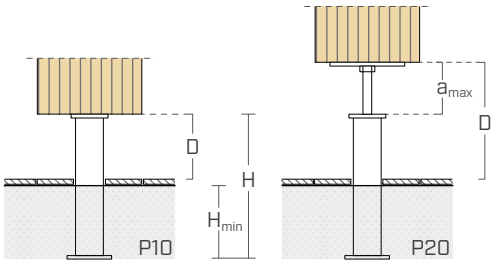

STRUCTURAL VALUES

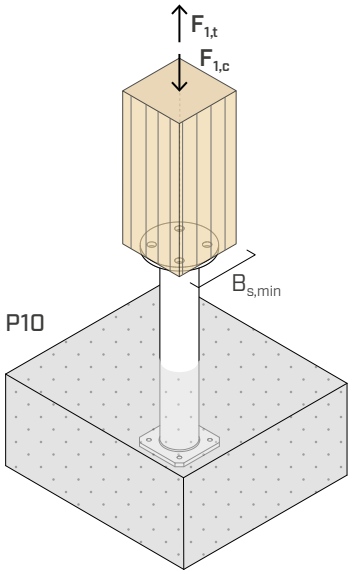

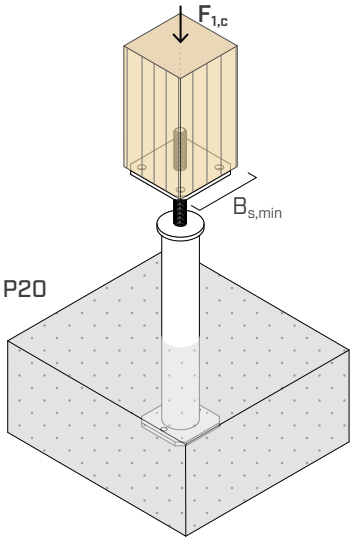

P10

						COMPRESSION						TENSION	
CODE	$B_{s,min}$	H	H_{min}	fasteners for timber		$R_{1,c\ k\ timber}$		$R_{1,c\ k\ steel}$				$R_{1,t\ k\ timber}$	
	[mm]	[mm]	[mm]	type	pcs - Ø x L [mm]	[kN]	γ_{timber}	[kN]	γ_{steel}	[kN]	γ_{steel}	[kN]	γ_{timber}
P10300	☐ 100 x 100	312	156	HBS PLATE EVO Ø8	4 - Ø8x80	**98,6**	γ_{MT} (1)	**78,7**	γ_{M0}	**107,0**	γ_{M1}	**6,2**	γ_{MC} (2)
P10500	○ Ø100	512	256		4- Ø8x160					**99,3**		**14,6**	

P20

							COMPRESSION					
CODE	$B_{s,min}$	H	H_{min}	a_{max}	fasteners for timber		$R_{1,c\ k\ timber}$		$R_{1,c\ k\ steel}$			
	[mm]	[mm]	[mm]	[mm]	type	pcs - Ø x L [mm]	[kN]	γ_{timber}	[kN]	γ_{steel}	[kN]	γ_{steel}
P20300	☐ 100 x 100	312	156	70	HBS PLATE EVO Ø8	4 - Ø8x80	**93,7**	γ_{MT} (1)	**59,5**	γ_{M0}	**106,0**	γ_{M1}
P20500		512	256	70							**106,0**	

NOTES

(1) γ_{MT} partial coefficient of the timber.

(2) γ_{MC} partial coefficient for connections.

GENERAL PRINCIPLES

- The characteristic values are consistent with EN 1995-1-1:2014 and in accordance with ETA-10/022 and valid for a minimum anchoring depth in the concrete casting of H_{min}.
- Design values can be obtained from characteristic values as follows:

$$R_d = min \begin{cases} \frac{R_{i,k\ timber} \cdot k_{mod}}{\gamma_M} \\ \frac{R_{i,k\ steel}}{\gamma_{Mi}} \end{cases}$$

The coefficients k_{mod}, γ_M and γ_{Mi} should be taken according to the current regulations used for the calculation.

The verification of the fastener-to-concrete connection must be carried out separately.

- A timber density of ρ_k = 350 kg/m^3 was considered for the calculation process.
- Dimensioning and verification of timber and concrete elements must be carried out separately.

UK CONSTRUCTION PRODUCT EVALUATION

- UKTA-0836-22/6374.

TYP F - FD - M

What do fences, pergolas, carports, railings and other small structures have in common? The need to fix vertical timber elements to the ground. The wide choice of standard post bases, with multiple geometries and dimensions, leads to more than 130 combinations shown in the table.

			column dimensions								
		[mm]	70	80	90	100	120	140	160	180	200
		[in]	*2 3/4*	*3 1/8*	*3 1/2*	*4*	*4 3/4*	*5 1/2*	*6 1/4*	*7 1/8*	*8*
F10	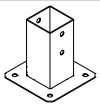	S235 HDG	▢	▢	▢	-	-	-	-	-	-
FI10 A2|AISI304	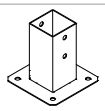	A2 AISI 304	▢	-	▢	-	-	-	-	-	-
F11	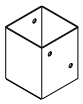	S235 HDG	-	-	▢	▢	▢	▢	▢	-	-
F12		S235 HDG	▢	▢	▢	▢	▢	▢	▢	-	-
F20	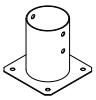	S235 HDG	-	◯	-	◯	◯	◯	-	-	-
F50	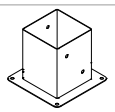	S235 HDG	-	-	-	▢	▢	▢	▢	▢	▢
FI50 A2|AISI304	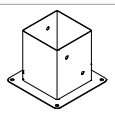	A2 AISI 304	-	-	-	▢	▢	▢	▢	-	▢
FM50 COLOR	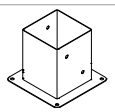	S235 THERMO DUST	-	-	-	▢	▢	-	▢	-	▢
FR50 COLOR	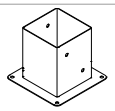	S235 THERMO DUST	-	-	-	▢	▢	-	-	-	-
F51	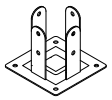	S235 HDG	-	-	-	-	▢	▢	▢	▢	▢
F69	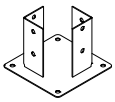	S235 HDG	-	-	-	▢	▢	-	▢	-	▢
FD10	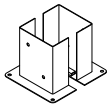	S235 HDG	-	-	-	-	↔	↔	↔	↔	↔
FD20	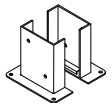	S235 HDG	-	-	-	-	↔	↔	↔	-	↔
FD30	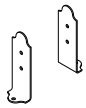	S235 HDG	↔	↔	↔	↔	↔	↔	↔	↔	↔
FD50		S235 HDG	⤢	⤢	⤢	⤢	⤢	⤢	⤢	⤢	⤢

			column dimensions								
		[mm]	70	80	90	100	120	140	160	180	200
		[in]	*2 3/4*	*3 1/8*	*3 1/2*	*4*	*4 3/4*	*5 1/2*	*6 1/4*	*7 1/8*	*8*
FD60	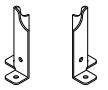	S235 HDG	⤢	⤢	⤢	⤢	⤢	⤢	⤢	⤢	⤢
FD70	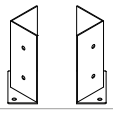	S235 HDG	⤢	⤢	⤢	⤢	⤢	⤢	⤢	⤢	⤢
M10	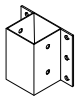	S235 HDG	▢	-	▢	-	-	-	-	-	-
M20		S235 HDG	▢	-	▢	▢	▢	-	-	-	-
M30		S235 HDG	▢	▢	▢	▢	▢	-	-	-	-
M50		S235 HDG	▢	▢	▢	▢	▢	-	-	-	-
M51	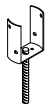	S235 HDG	-	◯	-	◯	◯	-	-	-	-
M52	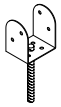	S235 HDG	-	▢	▢	▢	▢	-	-	-	-
M53	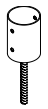	S235 ELECTRO PLATED	-	◯	-	◯	◯	-	-	-	-
M60	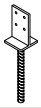	S235 HDG	-	▬	▬	▬	▬	▬	▬	-	-
M70S		S235 HDG	▢	-	▢	▢	▢		-	-	-
M70R		S235 HDG	-	◯	-	◯	◯	-	-	-	-
S40		S235 HDG	▢		▢	-	-	-	-	-	-

LEGEND

- ▢ square sleeve
- ◯ round sleeve
- ▢ with side flanges
- ▢ with four flanges
- ▢ with angular flanges
- ▢ double "C" shape
- ⟷ double side
- ⤢ double angle bracket
- ◯ double round side
- ▬ with internal blade

F10

S235 HDG

ETA-10/0422

SLEEVE POST BASE





CODES AND DIMENSIONS

CODE	sleeve [mm] *[in]*	height [mm] *[in]*	thickness [mm] *[in]*	bottom plate [mm] *[in]*	base holes [n. x mm] *[n. x in]*	sleeve holes [n. x mm] *[n. x in]*	pcs
F1070	71 x 71 *2 13/16 x 2 13/16*	150 *6*	2,0 *0.08*	150 x 150 *6 x 6*	4 x Ø11,5 *4 x Ø0.45*	4 x Ø11 *4 x Ø0.43*	1
F1080	81 x 81 *3 3/16 x 3 3/16*	150 *6*	2,0 *0.08*	150 x 150 *6 x 6*	4 x Ø11,5 *4 x Ø0.45*	4 x Ø11 *4 x Ø0.43*	1
F1090	91 x 91 *3 9/16 x 3 9/16*	150 *6*	2,0 *0.08*	150 x 150 *6 x 6*	4 x Ø11,5 *4 x Ø0.45*	4 x Ø11 *4 x Ø0.43*	1

F1080 not included in the ETA document.

FI10 A2 | AISI304

A2 AISI 304

CE ETA-10/0422

SLEEVE POST BASE





CODES AND DIMENSIONS

CODE	sleeve [mm] *[in]*	height [mm] *[in]*	thickness [mm] *[in]*	bottom plate [mm] *[in]*	base holes [n. x mm] *[n. x in]*	sleeve holes [n. x mm] *[n. x in]*	pcs
FI1070	71 x 71 *2 13/16 x 2 13/16*	150 *6*	2,0 *0.08*	150 x 150 *6 x 6*	4 x Ø11,5 *4 x Ø0.45*	4 x Ø11 *4 x Ø0.43*	1
FI1090	91 x 91 *3 9/16 x 3 9/16*	150 *6*	2,0 *0.08*	150 x 150 *6 x 6*	4 x Ø11,5 *4 x Ø0.45*	4 x Ø11 *4 x Ø0.43*	1

F11

S235 HDG

POST BASE WITH CONCEALED BASE





CODES AND DIMENSIONS

CODE	sleeve [mm] *[in]*	height [mm] *[in]*	thickness [mm] *[in]*	base holes [n. x mm] *[n. x in]*	sleeve holes [n. x mm] *[n. x in]*	pcs
F1190	91 x 91 *3 9/16 x 3 9/16*	150 *6*	2,5 *0.1*	4 x Ø8 *4 x Ø0.31*	4 x Ø11 *4 x Ø0.43*	1
F11100	101 x 101 *4 x 4*	150 *6*	2,5 *0.1*	4 x Ø8 *4 x Ø0.31*	4 x Ø11 *4 x Ø0.43*	1
F11120	121 x 121 *4 3/4 x 4 3/4*	150 *6*	2,5 *0.1*	4 x Ø8 *4 x Ø0.31*	4 x Ø11 *4 x Ø0.43*	1
F11140	141 x 141 *5 9/16 x 5 9/16*	200 *8*	3,0 *0.12*	4 x Ø13 *4 x Ø0.51*	4 x Ø11 *4 x Ø0.43*	1
F11160	161 x 161 *6 5/16 x 6 5/16*	200 *8*	3,0 *0.12*	4 x Ø13 *4 x Ø0.51*	4 x Ø11 *4 x Ø0.43*	1
LIFT20	60 x 60 *2 3/8 x 2 3/8*	20 *13/16*	3,0 *0.12*	-	-	1

LIFT not included in the box.

F12

S235 HDG

POST BASE WITH CONCEALED BASE



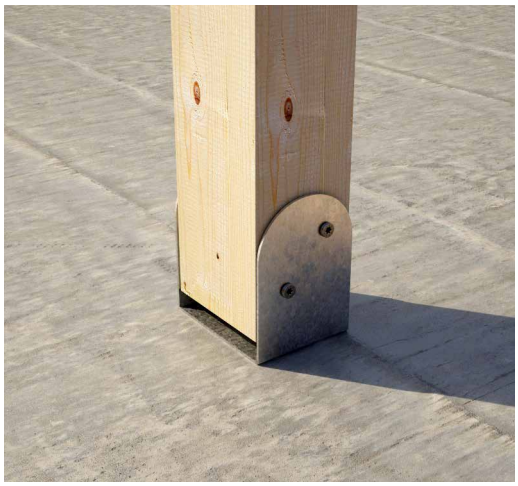

CODES AND DIMENSIONS

CODE	base [mm] *[in]*	height [mm] *[in]*	thickness [mm] *[in]*	base holes [n. x mm] *[n. x in]*	wings holes [n. x mm] *[n. x in]*	pcs
F1270	72 x 60 *2 13/16 x 2 3/8*	100 *4*	2,5 *0.1*	4 x Ø8 *4 x Ø0.31*	4 x Ø11 *4 x Ø0.43*	1
F1280	82 x 60 *3 1/4 x 2 3/8*	100 *4*	2,5 *0.1*	4 x Ø8 *4 x Ø0.31*	4 x Ø11 *4 x Ø0.43*	1
F1290	92 x 70 *3 5/8 x 2 3/4*	120 *4 3/4*	2,5 *0.1*	4 x Ø8 *4 x Ø0.31*	4 x Ø11 *4 x Ø0.43*	1
F12100	102 x 80 *4 x 3 1/8*	120 *4 3/4*	2,5 *0.1*	4 x Ø8 *4 x Ø0.31*	4 x Ø11 *4 x Ø0.43*	1
F12120	122 x 100 *4 13/16 x 4*	140 *5 1/2*	2,5 *0.1*	4 x Ø8 *4 x Ø0.31*	4 x Ø11 *4 x Ø0.43*	1
F12140	142 x 120 *5 9/16 x 4 3/4*	160 *6 1/4*	3,0 *0.12*	4 x Ø13 *4 x Ø0.51*	4 x Ø11 *4 x Ø0.43*	1
F12160	162 x 140 *6 3/8 x 5 1/2*	180 *7 1/8*	3,0 *0.12*	4 x Ø13 *4 x Ø0.51*	4 x Ø11 *4 x Ø0.43*	1
LIFT20	60 x 60 *2 3/8 x 2 3/8*	20 *13/16*	3,0 *0.12*	-	-	1

LIFT not included in the box.

F20

S235 HDG

ETA-10/0422

SLEEVE POST BASE





CODES AND DIMENSIONS

CODE	sleeve [mm] *[in]*	height [mm] *[in]*	thickness [mm] *[in]*	bottom plate [mm] *[in]*	base holes [n. x mm] *[n. x in]*	sleeve holes [n. x mm] *[n. x in]*	pcs
F2080	Ø81 *3 3/16*	150 *6*	2,0 *0.08*	160 x 160 *6 1/4 x 6 1/4*	4 x Ø11,5 *4 x Ø0.45*	4 x Ø11 *4 x Ø0.43*	1
F20100	Ø101 *4*	150 *6*	2,0 *0.08*	160 x 160 *6 1/4 x 6 1/4*	4 x Ø11,5 *4 x Ø0.45*	4 x Ø11 *4 x Ø0.43*	1
F20120	Ø121 *4 3/4*	150 *6*	2,0 *0.08*	180 x 180 *7 1/8 x 7 1/8*	4 x Ø11,5 *4 x Ø0.45*	4 x Ø11 *4 x Ø0.43*	1
F20140	Ø141 *5 9/16*	150 *6*	2,0 *0.08*	200 x 200 *8 x 8*	4 x Ø11,5 *4 x Ø0.45*	4 x Ø11 *4 x Ø0.43*	1

F50

S235 HDG

ETA-10/0422

SLEEVE POST BASE





CODES AND DIMENSIONS

CODE	sleeve [mm] *[in]*	height [mm] *[in]*	thickness [mm] *[in]*	bottom plate [mm] *[in]*	base holes [n. x mm] *[n. x in]*	sleeve holes [n. x mm] *[n. x in]*	pcs
F50100	101 x 101 *4 x 4*	150 *6*	2,5 *0.1*	150 x 150 *6 x 6*	4 x Ø11,5 *4 x Ø0.45*	4 x Ø11 *4 x Ø0.43*	1
F50120	121 x 121 *4 3/4 x 4 3/4*	150 *6*	2,5 *0.1*	200 x 200 *8 x 8*	4 x Ø11,5 *4 x Ø0.45*	4 x Ø11 *4 x Ø0.43*	1
F50140	141 x 141 *5 9/16 x 5 9/16*	150 *6*	2,5 *0.1*	200 x 200 *8 x 8*	4 x Ø11,5 *4 x Ø0.45*	4 x Ø11 *4 x Ø0.43*	1
F50160	161 x 161 *6 5/16 x 6 5/16*	200 *8*	2,5 *0.1*	240 x 240 *9 1/2 x 9 1/2*	4 x Ø11,5 *4 x Ø0.45*	4 x Ø11 *4 x Ø0.43*	1
F50180	181 x 181 *7 1/8 x 7 1/8*	200 *8*	2,5 *0.1*	280 x 280 *11 x 11*	4 x Ø11,5 *4 x Ø0.45*	4 x Ø11 *4 x Ø0.43*	1
F50200	201 x 201 *8 x 8*	200 *8*	2,5 *0.1*	300 x 300 *11 3/4 x 11 3/4*	4 x Ø11,5 *4 x Ø0.45*	4 x Ø11 *4 x Ø0.43*	1

FR50 COLOR

S235 THERMO DUST

ETA-10/0422

SLEEVE POST BASE





CODES AND DIMENSIONS

CODE	sleeve [mm] *[in]*	height [mm] *[in]*	thickness [mm] *[in]*	bottom plate [mm] *[in]*	base holes [n. x mm] *[n. x in]*	sleeve holes [n. x mm] *[n. x in]*	pcs
FR50100	101 x 101 *4 x 4*	150 *6*	2,5 *0.1*	150 x 150 *6 x 6*	4 x Ø11,5 *4 x Ø0.45*	4 x Ø11 *4 x Ø0.43*	1
FR50120	121 x 121 *4 3/4 x 4 3/4*	150 *6*	2,5 *0.1*	200 x 200 *8 x 8*	4 x Ø11,5 *4 x Ø0.45*	4 x Ø11 *4 x Ø0.43*	1

Fastenings for wood and concrete included.

FM50 COLOR

S235 THERMO DUST

ETA-10/0422

SLEEVE POST BASE

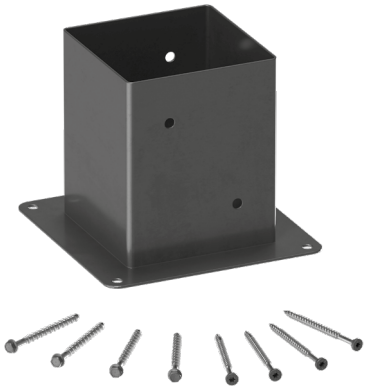



CODES AND DIMENSIONS

CODE	sleeve [mm] *[in]*	height [mm] *[in]*	thickness [mm] *[in]*	bottom plate [mm] *[in]*	base holes [n. x mm] *[n. x in]*	sleeve holes [n. x mm] *[n. x in]*	pcs
FM50100	101 x 101 *4 x 4*	150 *6*	2,5 *0.1*	150 x 150 *6 x 6*	4 x Ø11,5 *4 x Ø0.45*	4 x Ø11 *4 x Ø0.43*	1
FM50120	121 x 121 *4 3/4 x 4 3/4*	150 *6*	2,5 *0.1*	200 x 200 *8 x 8*	4 x Ø11,5 *4 x Ø0.45*	4 x Ø11 *4 x Ø0.43*	1
FM50160	161 x 161 *6 5/16 x 6 5/16*	200 *8*	2,5 *0.1*	240 x 240 *9 1/2 x 9 1/2*	4 x Ø11,5 *4 x Ø0.45*	4 x Ø11 *4 x Ø0.43*	1
FM50200	201 x 201 *8 x 8*	200 *8*	2,5 *0.1*	300 x 300 *11 3/4 x 11 3/4*	4 x Ø11,5 *4 x Ø0.45*	4 x Ø11 *4 x Ø0.43*	1

Fastenings for wood and concrete included.

FI50 A2 | AISI304

A2 AISI 304

CE ETA-10/0422

SLEEVE POST BASE



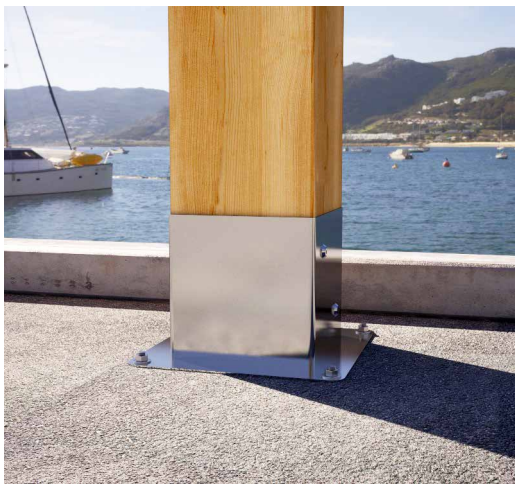

CODES AND DIMENSIONS

CODE	sleeve [mm] *[in]*	height [mm] *[in]*	thickness [mm] *[in]*	bottom plate [mm] *[in]*	base holes [n. x mm] *[n. x in]*	sleeve holes [n. x mm] *[n. x in]*	pcs
FI50100	101 x 101 *4 x 4*	150 *6*	2,5 *0.1*	150 x 150 *6 x 6*	4 x Ø11,5 *4 x Ø0.45*	4 x Ø11 *4 x Ø0.43*	1
FI50120	121 x 121 *4 3/4 x 4 3/4*	150 *6*	2,5 *0.1*	200 x 200 *8 x 8*	4 x Ø11,5 *4 x Ø0.45*	4 x Ø11 *4 x Ø0.43*	1
FI50140	141 x 141 *5 9/16 x 5 9/16*	150 *6*	2,5 *0.1*	200 x 200 *8 x 8*	4 x Ø11,5 *4 x Ø0.45*	4 x Ø11 *4 x Ø0.43*	1
FI50160	161 x 161 *6 5/16 x 6 5/16*	200 *8*	2,5 *0.1*	240 x 240 *9 1/2 x 9 1/2*	4 x Ø11,5 *4 x Ø0.45*	4 x Ø11 *4 x Ø0.43*	1
FI50200	201 x 201 *8 x 8*	200 *8*	2,5 *0.1*	300 x 300 *11 3/4 x 11 3/4*	4 x Ø11,5 *4 x Ø0.45*	4 x Ø11 *4 x Ø0.43*	1

F51

S235 HDG

POST BASE WITH FLANGES



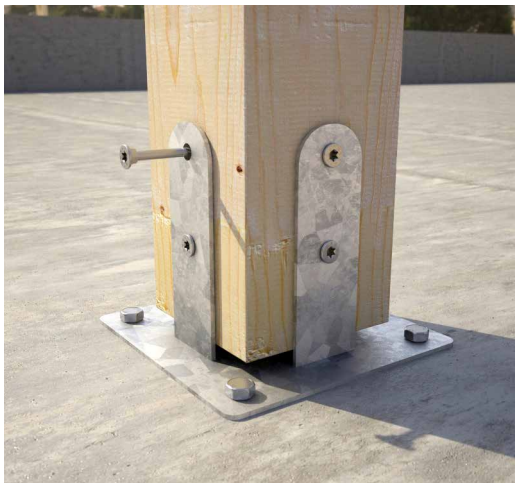

CODES AND DIMENSIONS

CODE	sleeve [mm] *[in]*	height [mm] *[in]*	thickness [mm] *[in]*	bottom plate [mm] *[in]*	base holes [n. x mm] *[n. x in]*	flange holes [n. x mm] *[n. x in]*	pcs
F51120	121 x 121 *4 3/4 x 4 3/4*	150 *6*	3,0 *0.12*	187 x 187 *7 3/8 x 7 3/8*	4 x Ø11,5 *4 x Ø0.45*	8 x Ø11 *8 x Ø0.43*	1
F51140	141 x 141 *5 9/16 x 5 9/16*	200 *8*	3,0 *0.12*	207 x 207 *8 1/8 x 8 1/8*	4 x Ø11,5 *4 x Ø0.45*	8 x Ø11 *8 x Ø0.43*	1
F51160	161 x 161 *6 5/16 x 6 5/16*	200 *8*	4,0 *0.16*	227 x 227 *8 15/16 x 8 15/16*	4 x Ø13,0 *4 x Ø0.51*	8 x Ø11 *8 x Ø0.43*	1
F51180	181 x 181 *7 1/8 x 7 1/8*	225 *8 7/8*	4,0 *0.16*	247 x 247 *9 3/4 x 9 3/4*	4 x Ø13,0 *4 x Ø0.51*	8 x Ø11 *8 x Ø0.43*	1
F51200	201 x 201 *8 x 8*	225 *8 7/8*	4,0 *0.16*	267 x 267 *10 1/2 x 10 1/2*	4 x Ø13,0 *4 x Ø0.51*	8 x Ø11 *8 x Ø0.43*	1

F69

S235 HDG

POST BASE WITH FLANGES





CODES AND DIMENSIONS

CODE	sleeve [mm] *[in]*	height [mm] *[in]*	thickness [mm] *[in]*	bottom plate [mm] *[in]*	base holes [n. x mm] *[n. x in]*	flange holes [n. x mm] *[n. x in]*	pcs
F69100	101 x 101 *4 x 4*	150 *6*	2,5 *0.1*	150 x 150 *6 x 6*	4 x Ø11,5 *4 x Ø0.45*	8 x Ø11 *8 x Ø0.43*	1
F69120	121 x 121 *4 3/4 x 4 3/4*	150 *6*	2,5 *0.1*	200 x 200 *8 x 8*	4 x Ø11,5 *4 x Ø0.45*	8 x Ø11 *8 x Ø0.43*	1
F69160	161 x 161 *6 5/16 x 6 5/16*	200 *8*	3,0 *0.12*	240 x 240 *9 1/2 x 9 1/2*	4 x Ø11,5 *4 x Ø0.45*	8 x Ø11 *8 x Ø0.43*	1
F69200	201 x 201 *8 x 8*	220 *8 5/8*	3,0 *0.12*	300 x 300 *11 3/4 x 11 3/4*	4 x Ø11,5 *4 x Ø0.45*	8 x Ø11 *8 x Ø0.43*	1
LIFT20	60 x 60 *2 3/8 x 2 3/8*	20 *13/16*	3,0 *0.12*	-	-	-	1

LIFT not included in the box.

FD10

S235 HDG

ETA-10/0422

DOUBLE POST BASE

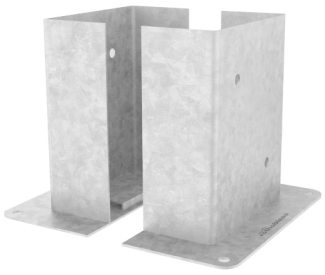



CODES AND DIMENSIONS

CODE	sleeve [mm] *[in]*	height [mm] *[in]*	thickness [mm] *[in]*	bottom plate [mm] *[in]*	base holes [n. x mm] *[n. x in]*	sleeve holes [n. x mm] *[n. x in]*	pcs(*)
FD10120	121 x 56 *4 3/4 x 2 3/16*	200 *8*	2,5 *0.1*	200 x 95 *8 x 3 3/4*	2 x Ø11,5 *8 x Ø0.45*	2 x Ø11 *2 x Ø0.43*	1
FD10140	141 x 66 *5 9/16 x 2 5/8*	200 *8*	2,5 *0.1*	220 x 105 *8 5/8 x 4 1/8*	2 x Ø11,5 *8 x Ø0.45*	2 x Ø11 *2 x Ø0.43*	1
FD10160	161 x 76 *6 5/16 x 3*	200 *8*	2,5 *0.1*	240 x 115 *9 1/2 x 4 1/2*	2 x Ø11,5 *8 x Ø0.45*	2 x Ø11 *2 x Ø0.43*	1
FD10180	181 x 86 *7 1/8 x 3 3/8*	200 *8*	2,5 *0.1*	260 x 125 *10 1/4 x 4 15/16*	2 x Ø11,5 *8 x Ø0.45*	2 x Ø11 *2 x Ø0.43*	1
FD10200	201 x 96 *8 x 3 3/4*	200 *8*	2,5 *0.1*	280 x 135 *11 x 5 5/16*	2 x Ø11,5 *8 x Ø0.45*	2 x Ø11 *2 x Ø0.43*	1

(*) 1 piece is intended as a pair of plates.

FD20

S235 HDG

ETA-10/0422

DOUBLE POST BASE





CODES AND DIMENSIONS

CODE	sleeve [mm] *[in]*	height [mm] *[in]*	thickness [mm] *[in]*	bottom plate [mm] *[in]*	base holes [n. x mm] *[n. x in]*	sleeve holes [n. x mm] *[n. x in]*	pcs(*)
FD20120	121 x 38 *4 3/4 x 5 7/16*	200 *8*	4,0 *0.16*	200 x 78 *8 x 3 1/16*	2 x Ø11,5 *2 x Ø0.45*	2 x Ø11 *2 x Ø0.43*	1
FD20140	141 x 46 *5 9/16 x 1 13/16*	200 *8*	4,0 *0.16*	200 x 85 *8 x 3 3/8*	2 x Ø11,5 *2 x Ø0.45*	2 x Ø11 *2 x Ø0.43*	1
FD20160	161 x 54 *6 5/16 x 2 1/8*	200 *8*	4,0 *0.16*	240 x 92 *9 1/2 x 3 5/8*	2 x Ø11,5 *2 x Ø0.45*	2 x Ø11 *2 x Ø0.43*	1
FD20200	201 x 66 *8 x 2 5/8*	200 *8*	4,0 *0.16*	280 x 105 *11 x 4 1/8*	2 x Ø11,5 *2 x Ø0.45*	2 x Ø11 *2 x Ø0.43*	1

(*) 1 piece is intended as a pair of plates.

FD70

S235 HDG

DOUBLE POST BASE





CODES AND DIMENSIONS

CODE	sleeve [mm] *[in]*	height [mm] *[in]*	thickness [mm] *[in]*	bottom plate [mm] *[in]*	base holes [n. x mm] *[n. x in]*	sleeve holes [n. x mm] *[n. x in]*	pcs(*)
FD7080	81 x 81 *3 3/16 x 3 3/16*	180 *7 1/8*	3,0 *0.12*	120 x 65 *4 3/4 x 2 9/16*	2 x Ø11,5 *2 x Ø0.45*	4 x Ø11 *4 x Ø0.43*	1
FD70100	101 x 101 *4 x 4*	220 *8 5/8*	3,0 *0.12*	150 x 80 *6 x 3 1/8*	2 x Ø11,5 *2 x Ø0.45*	4 x Ø11 *4 x Ø0.43*	1

(*) 1 piece is intended as a pair of plates.

FD30

S235 HDG

CE ETA-10/0422

DOUBLE POST BASE

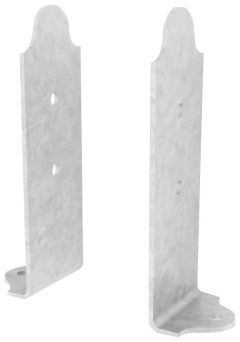

CODES AND DIMENSIONS

CODE	height [mm] *[in]*	thickness [mm] *[in]*	bottom plate [mm] *[in]*	base holes [n. x mm] *[n. x in]*	column holes [n. x mm] *[n. x in]*	pcs(*)
FD3060	180 *7 1/8*	4,0 *0.16*	60 x 50 *2 3/8 x 1 15/16*	1 x Ø11,5 *1 x Ø0.45*	2 x Ø11 *2 x Ø0.43*	1
FD3080	240 *9 1/2*	4,0 *0.16*	80 x 50 *3 1/8 x 1 15/16*	1 x Ø11,5 *1 x Ø0.45*	2 x Ø11 *2 x Ø0.43*	1

(*) 1 piece is intended as a pair of plates.

FD50

S235 HDG

CE ETA-10/0422

DOUBLE POST BASE



CODES AND DIMENSIONS

CODE	height [mm] *[in]*	thickness [mm] *[in]*	bottom plate [mm] *[in]*	base holes [n. x mm] *[n. x in]*	column holes [n. x mm] *[n. x in]*	pcs(*)
FD5050	185 *7 1/4*	4,0 *0.16*	46 x 46 *1 13/16 x 1 13/16*	1 x Ø11,5 *1 x Ø0.45*	2 x Ø11 *2 x Ø0.43*	1
FD5080	220 *8 5/8*	4,0 *0.16*	76 x 76 *3 x 3*	1 x Ø11,5 *1 x Ø0.45*	2 x Ø11 *2 x Ø0.43*	1

(*) 1 piece is intended as a pair of plates.

FD60

S235 HDG

CE ETA-10/0422

DOUBLE POST BASE



CODES AND DIMENSIONS

CODE	height [mm] *[in]*	thickness [mm] *[in]*	base internal [mm] *[in]*	base holes [n. x mm] *[n. x in]*	column holes [n. x mm] *[n. x mm]*	wings [mm] *[in*	pcs(*)
FD6050	185 *7 1/4*	4,0 *0.16*	46 x 46 *1 13/16 x 1 13/16*	2 x Ø11,5 *2 x Ø0.45*	2 x Ø11 *2 x Ø0.43*	40 x 43 *1 9/16 x 2 7/8*	1
FD6080	220 *8 5/8*	4,0 *0.16*	76 x 76 *3 x 3*	2 x Ø11,5 *2 x Ø0.45*	2 x Ø11 *2 x Ø0.43*	50 x 73 *1 15/16 x 3*	1

(*) 1 piece is intended as a pair of plates.

M10

S235 HDG

ETA-10/0422

WALL-MOUNTED POST BASE



CODES AND DIMENSIONS

CODE	sleeve [mm] *[in]*	height [mm] *[in]*	thickness [mm] *[in]*	width [mm] *[in]*	wall holes [n. x mm] *[n. x in]*	sleeve holes [n. x mm] *[n. x in]*	pcs
M1070	71 x 71 *2 13/16 x 2 13/16*	150 *6*	2,0 *0.08*	151 *5 15/16*	6 x Ø11 *6 x Ø0.43*	4 x Ø11 *4 x Ø0.43*	1
M1090	91 x 91 *3 9/16 x 3 9/16*	150 *6*	2,0 *0.08*	175 *6 7/8*	6 x Ø11 *6 x Ø0.43*	4 x Ø11 *4 x Ø0.43*	1

M20

S235 HDG

CE

ETA-10/0422

“U” SHAPED POST BASE



CODES AND DIMENSIONS

CODE	base [mm] *[in]*	height [mm] *[in]*	thickness [mm] *[in]*	base holes [n. x mm] *[n. x in]*	column holes [n. x mm] *[n. x in]*	pcs
M2070	71 x 60 *2 13/16 x 2 3/8*	150 *6*	5,0 *0.2*	1 x Ø13 + 2 x Ø11,5 *1 x Ø0.51 + 2 x Ø0.45*	6 x Ø11 *6 x Ø0.43*	1
M2090	91 x 60 *3 9/16 x 2 3/8*	150 *6*	5,0 *0.2*	1 x Ø13 + 2 x Ø11,5 *1 x Ø0.51 + 2 x Ø0.45*	6 x Ø11 *6 x Ø0.43*	1
M20100	101 x 60 *4 x 2 3/8*	150 *6*	5,0 *0.2*	1 x Ø13 + 2 x Ø11,5 *1 x Ø0.51 + 2 x Ø0.45*	6 x Ø11 *6 x Ø0.43*	1
M20120	121 x 60 *4 3/4 x 2 3/8*	150 *6*	5,0 *0.2*	1 x Ø13 + 2 x Ø11,5 *1 x Ø0.51 + 2 x Ø0.45*	6 x Ø11 *6 x Ø0.43*	1

M30

S235 HDG

CE

ETA-10/0422

BRACKET POST BASE



CODES AND DIMENSIONS

CODE	internal size [mm] *[in]*	height [mm] *[in]*	thickness [mm] *[in]*	bottom plate [mm] *[in]*	base holes [n. x mm] *[n. x in]*	column holes [n. x mm] *[n. x in]*	pcs
M3070	71 x 50 *2 13/16 x 1 15/16*	200 *8*	5,0 *0.2*	160 x 60 *6 1/4 x 2 3/8*	2 x Ø11,5 *2 x Ø0.45*	4 x Ø11 *4 x Ø0.43*	1
M3080	81 x 50 *3 3/16 x 1 15/16*	200 *8*	5,0 *0.2*	170 x 60 *6 3/4 x 2 3/8*	2 x Ø11,5 *2 x Ø0.45*	4 x Ø11 *4 x Ø0.43*	1
M3090	91 x 50 *3 9/16 x 1 15/16*	200 *8*	5,0 *0.2*	180 x 60 *7 1/8 x 2 3/8*	2 x Ø11,5 *2 x Ø0.45*	4 x Ø11 *4 x Ø0.43*	1
M30100	101 x 50 *4 x 1 15/16*	200 *8*	5,0 *0.2*	190 x 60 *7 1/2 x 2 3/8*	2 x Ø11,5 *2 x Ø0.45*	4 x Ø11 *4 x Ø0.43*	1
M30120	121 x 50 *4 3/4 x 1 15/16*	200 *8*	5,0 *0.2*	210 x 60 *8 1/4 x 2 3/8*	2 x Ø11,5 *2 x Ø0.45*	4 x Ø11 *4 x Ø0.43*	1

M30120 not holding CE marking.

M50

S235 HDG

CE ETA-10/0422

POST BASE WITH ROD





CODES AND DIMENSIONS

CODE	base [mm] *[in]*	height [mm] *[in]*	thickness [mm] *[in]*	column holes [n. x mm] *[n. x in]*	rod Ø x L [mm] *[in]*	pcs
M5070	71 x 60 *2 13/16 x 2 3/8*	150 *6*	5,0 *0.2*	6 x Ø11 *6 x Ø0.43*	20 x 200 *0.79 x 8*	1
M5090	91 x 60 *3 9/16 x 2 3/8*	150 *6*	5,0 *0.2*	6 x Ø11 *6 x Ø0.43*	20 x 200 *0.79 x 8*	1
M50100	101 x 60 *4 x 2 3/8*	150 *6*	5,0 *0.2*	6 x Ø11 *6 x Ø0.43*	20 x 200 *0.79 x 8*	1
M50120	121 x 60 *4 3/4 x 2 3/8*	150 *6*	5,0 *0.2*	6 x Ø11 *6 x Ø0.43*	20 x 200 *0.79 x 8*	1

M51

S235 HDG

POST BASE WITH ROD





CODES AND DIMENSIONS

CODE	sleeve [mm] *[in]*	height [mm] *[in]*	thickness [mm] *[in]*	base holes [n. x mm] *[n. x in]*	wings holes [n. x mm] *[n. x in]*	rod Ø x L [mm] *[in]*	pcs
M51100	Ø101 *Ø4*	150 *6*	3,0 *0.12*	2 x Ø8 *2 x Ø0.31*	4 x Ø11 *4 x Ø0.43*	20 x 200 *0.79 x 8*	1
M51120	Ø121 *Ø4 3/4*	150 *6*	3,0 *0.12*	2 x Ø8 *2 x Ø0.31*	4 x Ø11 *4 x Ø0.43*	20 x 200 *0.79 x 8*	1

M52

S235 HDG

POST BASE WITH ROD





CODES AND DIMENSIONS

CODE	base [mm] *[in]*	height [mm] *[in]*	thickness [mm] *[in]*	base holes [n. x mm] *[n. x in]*	wings holes [n. x mm] *[n. x in]*	rod Ø x L [mm] *[in]*	pcs
M5290	91 x 70 *3 9/16 x 2 3/4*	120 *4 3/4*	2,5 *0.1*	4 x Ø8 *4 x Ø0.31*	4 x Ø11 *4 x Ø0.43*	20 x 200 *0.79 x 8*	1
M52100	101 x 80 *4 x 3 1/8*	120 *4 3/4*	2,5 *0.1*	4 x Ø8 *4 x Ø0.31*	4 x Ø11 *4 x Ø0.43*	20 x 200 *0.79 x 8*	1
M52120	121 x 100 *4 3/4 x 4*	140 *5 1/2*	2,5 *0.1*	4 x Ø8 *4 x Ø0.31*	4 x Ø11 *4 x Ø0.43*	20 x 200 *0.79 x 8*	1

M53

S235 ELECTRO PLATED

POST BASE WITH ROD





CODES AND DIMENSIONS

CODE	sleeve [mm] *[in]*	height [mm] *[in]*	thickness [mm] *[in]*	base holes [n. x mm] *[n. x in]*	rod Ø x L [mm] *[in]*	pcs
M5380	Ø81 *Ø3 3/16*	150 *6*	3 *0.12*	4 x Ø12,5 *4 x Ø0.49*	20 x 200 *0.79 x 8*	1
M53100	Ø101 *Ø4*	150 *6*	3 *0.12*	4 x Ø12,5 *4 x Ø0.49*	20 x 200 *0.79 x 8*	1
M53120	Ø121 *Ø4 3/4*	150 *6*	3 *0.12*	4 x Ø12,5 *4 x Ø0.49*	20 x 200 *0.79 x 8*	1

M60

POST BASE WITH ROD

S235 HDG

CE ETA-10/0422





CODES AND DIMENSIONS

CODE	base [mm] *[in]*	height [mm] *[in]*	thickness [mm] *[in]*	column holes [n. x mm] *[n. x in]*	rod Ø x L [mm] *[in]*	pcs
M6080	80 x 80 *3 1/8 x 3 1/8*	130 *5 1/8*	8,0 *0.31*	4 x Ø11 *4 x Ø0.43*	20 x 250 *0.79 x 10*	1

M70 S

SPIKED POST BASE

S235 HDG

ETA-10/0422





CODES AND DIMENSIONS

CODE	sleeve [mm] *[in]*	sleeve height [mm] *[in]*	thickness [mm] *[in]*	sleeve holes [n. x mm] *[n. x in]*	tip length [mm] *[in]*	pcs
M70S70	71 x 71 *2 13/16 x 2 13/16*	150 *6*	2,0 *0.08*	4 x Ø11 *4 x Ø0.43*	600 *23 5/8*	1
M70S90	91 x 91 *3 9/16 x 3 9/16*	150 *6*	2,0 *0.08*	4 x Ø11 *4 x Ø0.43*	600 *23 5/8*	1
M70S100	101 x 101 *4 x 4*	150 *6*	2,0 *0.08*	4 x Ø11 *4 x Ø0.43*	750 *29 1/2*	1
M70S120	121 x 121 *4 3/4 x 4 3/4*	150 *6*	2,0 *0.08*	4 x Ø11 *4 x Ø0.43*	750 *29 1/2*	1

M70S100 and M70S120 not included in the ETA document.

M70 R

S235 HDG

ETA-10/0422

SPIKED POST BASE





CODES AND DIMENSIONS

CODE	sleeve [mm] *[in]*	sleeve height [mm] *[in]*	thickness [mm] *[in]*	sleeve holes [n. x mm] *[n. x in]*	tip length [mm] *[in]*	pcs
M70R80	Ø81 *Ø3 3/16*	150 *6*	2,0 *0.08*	4 x Ø11 *4 x Ø0.43*	450 *17 3/4*	1
M70R100	Ø101 *Ø4*	150 *6*	2,0 *0.08*	4 x Ø11 *4 x Ø0.43*	450 *17 3/4*	1
M70R120	Ø121 *Ø4 3/4*	150 *6*	2,0 *0.08*	4 x Ø11 *4 x Ø0.43*	600 *23 5/8*	1

M70R120 not included in the ETA document.

S40

S235 HDG

INCLINABLE POST BASE





CODES AND DIMENSIONS

CODE	internal size [mm] *[in]*	height [mm] *[in]*	thickness [mm] *[in]*	bottom plate [mm] *[in]*	base holes [n. x mm] *[n. x in]*	column holes [n. x mm] *[n. x in]*	pcs
S4070	71 x 60 *2 13/16 x 2 3/8*	100 *4*	5,0 *0.2*	100 x 100 *4 x 4*	4 x Ø12 *4 x Ø0.47*	6 x Ø11 *6 x Ø0.43*	1
S4090	91 x 60 *3 9/16 x 2 3/8*	100 *4*	5,0 *0.2*	100 x 100 *4 x 4*	4 x Ø12 *4 x Ø0.47*	6 x Ø11 *6 x Ø0.43*	1

LIFT

S235 HDG

RISER FOR POST BASES



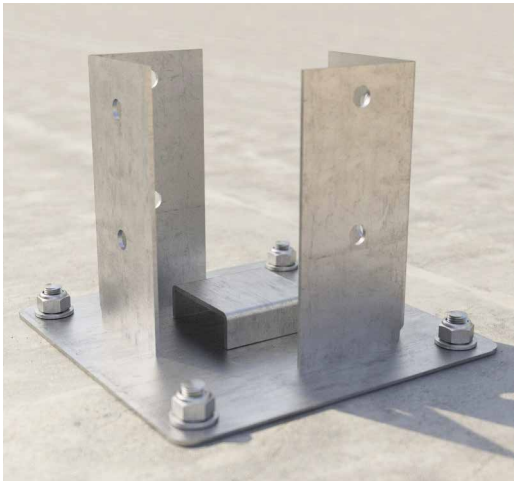

CODES AND DIMENSIONS

CODE	type	width [mm] *[in]*	height [mm] *[in]*	thickness [mm] *[in]*	depth [mm] *[in]*	pcs
LIFT20	STANDOFF	60 *2.36*	20 *0.79*	3,0 *0.12*	60 *2.36*	1

HUT

Fe/Zn

POST CAPS

1

2





CODES AND DIMENSIONS

	CODE	sizes [mm]	sizes *[in]*	height [mm]	height *[in]*	pcs
1	**HUTS70**	70 x 70	*2 3/4 x 2 3/4*	20	*13/16*	10
1	**HUTS90**	90 x 90	*3 1/2 x 3 1/2*	20	*13/16*	10
1	**HUTS100**	100 x 100	*4 x 4*	20	*13/16*	10
1	**HUTS120**	120 x 120	*4 3/4 x 4 3/4*	20	*13/16*	10
2	**HUTR80**	Ø80	*Ø3.15*	20	*13/16*	10
2	**HUTR100**	Ø100	*Ø3.94*	20	*13/16*	10
2	**HUTR120**	Ø120	*Ø4.73*	20	*13/16*	10

ROUND

JOINTS FOR ROUND POSTS

OUTDOOR
Hot dip galvanizing for outdoor use in service classes 1, 2 and 3.

ROUND COLUMNS
Ideal for fences with circular section wooden elements.











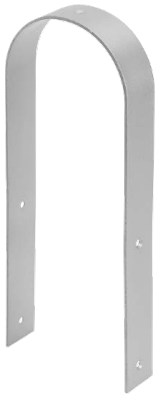



SERVICE CLASS	SC1	SC2	SC3
MATERIAL			
Fe/Zn	zinc-plated carbon steel		



FIELDS OF USE

Construction of fences.

Suitable for elements in:
- solid timber softwood and hardwood
- glulam, LVL

CODES AND DIMENSIONS

ROUND

	CODE	a x b [mm] [in]	d [mm] [in]	s [mm] [in]	Ø pole [mm] [in]	$Ø_1$ [mm] [in]	$Ø_2$ [mm] [in]	pcs
1	**ROUND100**	208 x 68 *8 3/16 x 2 11/16*	-	2,5 *0.10*	Ø100 *Ø3.94*	Ø11 *Ø 0.44*	Ø5 *Ø 0.20*	10
2	**ROUNDE100**	117,5 x 70 *4 5/8 x 2 3/4*	-	2,5 *0.10*	Ø100 *Ø3.94*	Ø11 *Ø 0.44*	Ø5 *Ø 0.20*	10
3	**ROUNDH100**	70 x 65 *2 3/4 x 2 9/16*	70 *2 3/4*	2,5 *0.10*	Ø100 *Ø3.94*	Ø11 *Ø 0.44*	Ø11 *Ø 0.44*	10

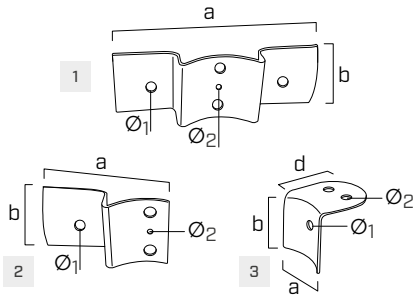

ROUND L

	CODE	a [mm] [in]	d [mm] [in]	b [mm] [in]	s [mm] [in]	Ø pole [mm] [in]	Ø [mm] [in]	pcs
1	**ROUNDL80**	80 *3 1/8*	80 *3 1/8*	57 *2 1/4*	1,5 *0.06*	Ø60-Ø80 *Ø2.37 - Ø3.15*	Ø5 *Ø 0.20*	100
2	**ROUNDL120**	123 *4 13/16*	123 *4 13/16*	74 *2 15/16*	1,5 *0.06*	Ø100-Ø120 *Ø3.94 - Ø4.73*	Ø5 *Ø 0.20*	100

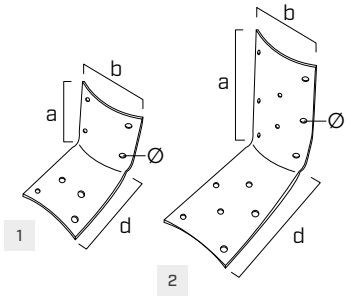

ROUND U

CODE	a [mm] [in]	b [mm] [in]	d [mm] [in]	s [mm] [in]	Ø [mm] [in]	pcs
ROUNDU80	80 *3 1/8*	345 *13 9/16*	40 *1 9/16*	3,0 *0.12*	Ø6 *Ø 0.24*	1
ROUNDU100	100 *4*	345 *13 9/16*	40 *1 9/16*	3,0 *0.12*	Ø6 *Ø 0.24*	1
ROUNDU120	120 *4 3/4*	345 *13 9/16*	40 *1 9/16*	3,0 *0.12*	Ø6 *Ø 0.24*	1

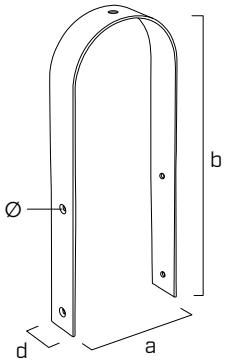



FENCES

Ideal for joining round section wood:

- ROUND100 for pass-through joints;
- ROUNDE100 for end joints;
- ROUNDH100 for the handrail joint.

BRACE

HINGED PLATE

PILES
Ideal for reciprocal fastening with variable inclination of rectangular or round columns.

STAINLESS
Available in A2 | AISI304 stainless steel for use in aggressive outdoor environments and on class T4 acidic timber.

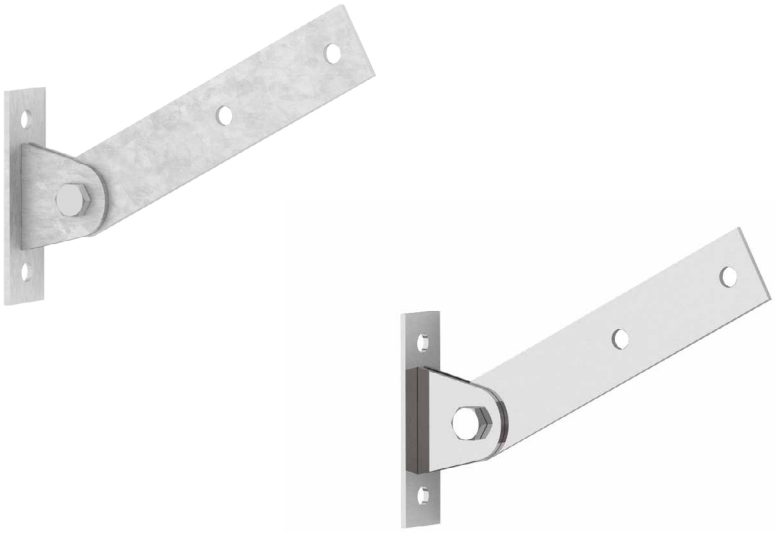



SERVICE CLASS	SC1	SC2	SC3

MATERIAL

S235 HDG — S235 carbon steel with hot galvanising

A2 AISI 304 — A2 | AISI304 austenitic stainless steel (CRC II)



FIELDS OF USE

Outdoor joints of inclined elements for the construction of pergolas, fences and stilt houses.

Suitable for elements in:
- solid timber softwood and hardwood
- glulam, LVL

CODES AND DIMENSIONS

BRACE

S235 HDG

CODE	B [mm] [in]	H [mm] [in]	L [mm] [in]	s [mm] [in]	s_1 [mm] [in]	Ø [mm] [in]	pcs
BRF140	40 *1 9/16*	140 *5 1/2*	235 *9 1/4*	5 *0.20*	4 *0.16*	13 *0.52*	1

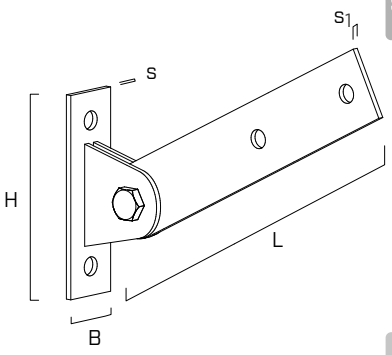

HBS PLATE EVO

C4 EVO COATING

CODE	d_1 [mm]	L [mm]	b [mm]	TX	pcs
HBSPLEVO10100	10	100	75	TX 40	100

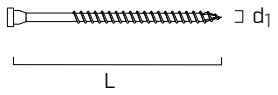

KOS

Zn ELECTRO PLATED

CODE	d [mm]	L [mm]	pcs
KOS12120B	M12	120	25

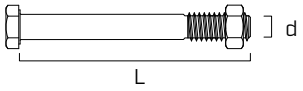

BRACE A2 | AISI304

A2 AISI 304

CODE	B [mm] [in]	H [mm] [in]	L [mm] [in]	s [mm] [in]	s_1 [mm] [in]	Ø [mm] [in]	pcs
BRFI140	40 *1 9/16*	140 *5 1/2*	235 *9 1/4*	5 *0.20*	4 *0.16*	13 *0.52*	1

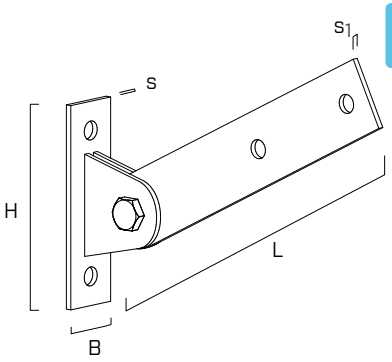

KOT A2 | AISI304

A2 AISI 304

CODE	d [mm]	L [mm]	pcs
AI60112120	M12	120	25

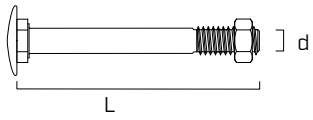

SCI A2 | AISI304

A2 AISI 304

CODE	d_1 [mm]	L [mm]	b [mm]	TX	pcs
SCI80120	8	120	60	TX 40	100

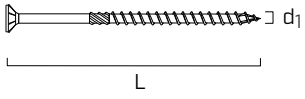

HUS A4

A4 AISI 316

CODE	D_1 [mm]	D_2 [mm]	h [mm]	d_{SCI} [mm]	pcs
HUS8A4	8,5	25,0	5,0	8	100

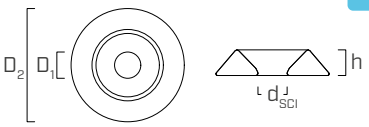

GATE

GATE FASTENERS

OUTDOOR
Hot dip galvanizing for outdoor use in service classes 1, 2 and 3.

VERSATILE
Available in several sizes for creating also large gates.

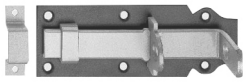

GATE LATCH



GATE HOOK



GATE BAND



GATE FLOOR

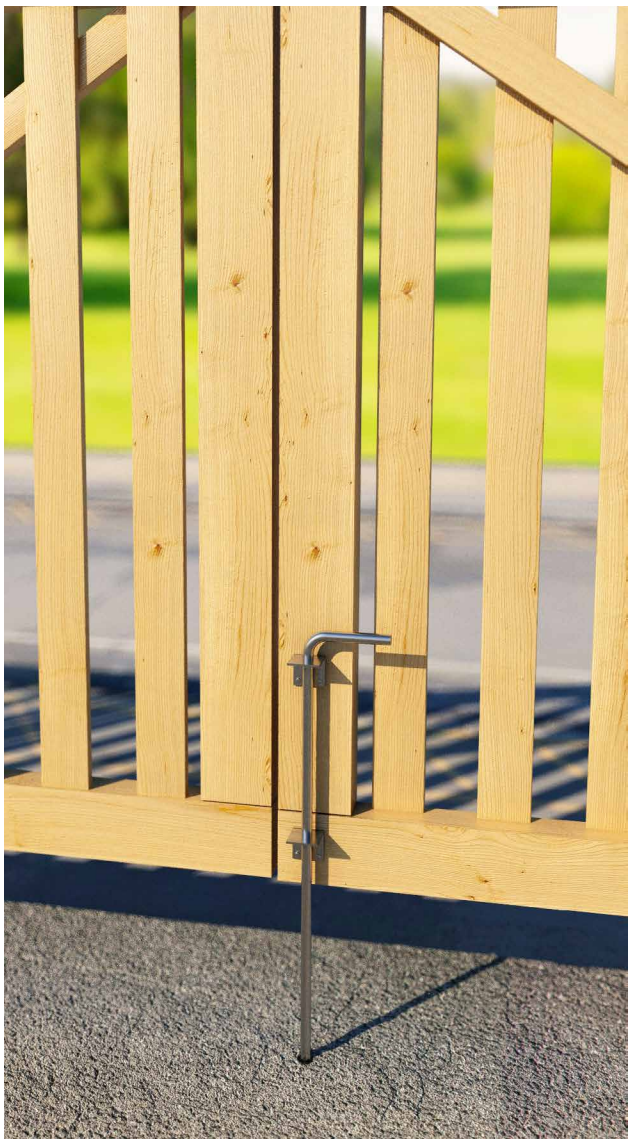

CHARACTERISTICS

GATE LATCH	closing bolt
GATE FLOOR	cane bolt
GATE HOOK	pin for strap
GATE BAND	strap with groove
GATE HINGE	hinge

SERVICE CLASS SC1 SC2 SC3

MATERIAL

Fe/Zn zinc-plated carbon steel



FIELDS OF USE

Construction of wooden garden gates.

Suitable for elements in:
- solid timber softwood and hardwood
- glulam, LVL

CODES AND DIMENSIONS

GATE LATCH

CODE	a x b [mm] [in]	c [mm] [in]	d [mm] [in]	e [mm] [in]	Ø [mm] [in]	pcs
GATEL100	100 x 44 *4 x 1 3/4*	16 *5/8*	13 *1/2*	45 *1 3/4*	Ø5/3,5 *Ø 0.2/0.14*	10
GATEL120	120 x 44 *4 3/4 x 1 3/4*	16 *5/8*	13 *1/2*	45 *1 3/4*	Ø5/3,5 *Ø 0.2/0.14*	10
GATEL140	140 x 52 *5 1/2 x 2 1/16*	20 *13/16*	16 *5/8*	55 *2 3/16*	Ø5/4,5 *Ø 0.2/0.14*	10

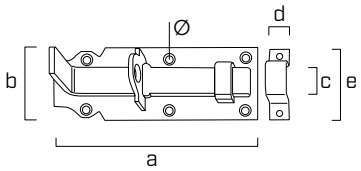

GATE FLOOR

CODE	H [mm] [in]	c [mm] [in]	Ø [mm] [in]	pcs
GATEF400	400 *15 3/4*	Ø16 *Ø 0.63*	Ø6,5 *Ø 0.26*	5
GATEF500	500 *19 3/4*	Ø16 *Ø 0.63*	Ø6,5 *Ø 0.26*	5

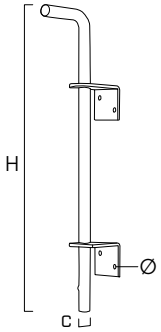

GATE HOOK

CODE	a x b [mm] [in]	c [mm] [in]	s [mm] [in]	e [mm] [in]	Ø [mm] [in]	pcs
GATEH13	35 x 100 *1 3/8 x 4*	Ø13 *Ø 0.52*	4,0 *0.16*	40 *1 9/16*	Ø6,5 *Ø 0.26*	10
GATEH16	40 x 115 *1 9/16 x 4 1/2*	Ø16 *Ø 0.63*	4,5 *0.18*	45 *1 3/4*	Ø7,2 *Ø 0.29*	10
GATEH20	60 x 167 *2 3/8 x 6 9/16*	Ø20 *Ø 0.79*	6,0 *0.24*	60 *2 3/8*	Ø7,2 *Ø 0.29*	4

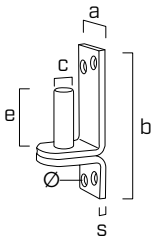

GATE BAND

CODE	a x b [mm] [in]	c [mm] [in]	s [mm] [in]	Ø [mm] [in]	pcs
GATEB13300	300 x 40 *11 3/4 x 1 9/16*	Ø13 *Ø 0.52*	5,0 *0.20*	Ø7 *Ø 0.28*	10
GATEB13500	500 x 40 *19 3/4 x 1 9/16*	Ø13 *Ø 0.52*	5,0 *0.20*	Ø7 *Ø 0.28*	10
GATEB16400	400 x 45 *15 3/4 x 1 3/4*	Ø16 *Ø 0.63*	5,0 *0.20*	Ø9 *Ø 0.36*	10
GATEB16700	700 x 45 *27 1/2 x 1 3/4*	Ø16 *Ø 0.63*	5,0 *0.20*	Ø9 *Ø 0.36*	10
GATEB201200	1200 x 60 *47 1/4 x 2 3/8*	Ø20 *Ø 0.79*	8,0 *0.31*	Ø9 *Ø 0.36*	1

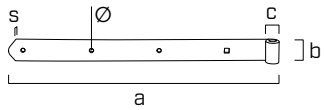

GATE HINGE

CODE	a x b [mm] [in]	s [mm] [in]	Ø [mm] [in]	pcs
HINGE140	135 x 35 *5 5/16 x 1 3/8*	2 *0.08*	Ø5,5 *Ø 0.22*	20
HINGE160	156 x 35 *6 1/8 x 1 3/8*	2 *0.08*	Ø5,5 *Ø 0.22*	20
HINGE200	195 x 35 *7 11/16 x 1 3/8*	2 *0.08*	Ø5,5 *Ø 0.22*	20

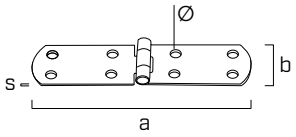

FLAT | FLIP

CONNECTOR FOR DECKING

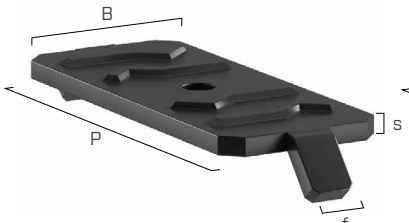

FLAT

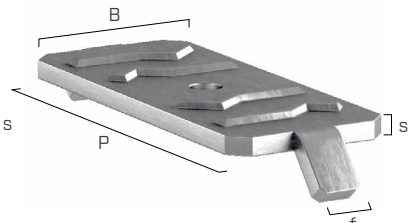

FLIP

CODE	material	P x B x s [mm] *[in]*	f [mm] *[in]*	pcs
FLAT	black alluminum	54 x 27 x 4 *2 1/8 x 1 1/16 x 0.16*	7 *1/4*	200
FLIP	zinc-plated steel	54 x 27 x 4 *2 1/8 x 1 1/16 x 0.16*	7 *1/4*	200

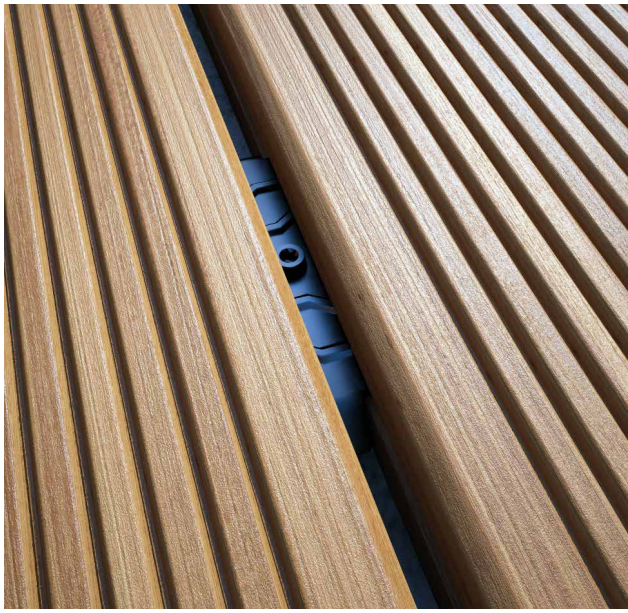

GAP

CONNECTOR FOR DECKING

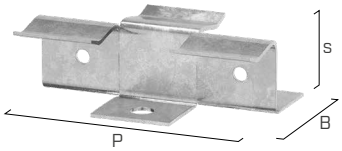

GAP 3

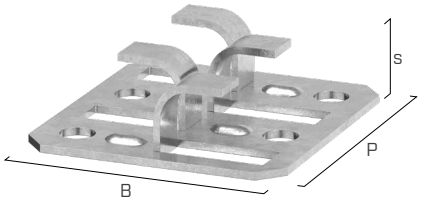

GAP 4

CODE	material	P x B x s [mm] *[in]*	f [mm] *[in]*	pcs
GAP3	A2 | AISI304	40 x 30 x 11 *1 9/16 x 1 3/16 x 7/16*	2 ÷ 5 *1/16 ÷ 3/16*	500
GAP4	zinc-plated steel	41,5 x 42,5 x 12 *1 5/8 x 1 11/16 x 1/2*	2 ÷ 5 *1/16 ÷ 3/16*	500

f = gap thickness



SNAP

CONNECTOR AND SPACER FOR DECKS

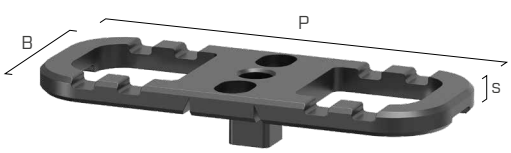



CODE	material	P x B x s [mm] *[in]*	f [mm] *[in]*	pcs
SNAP	polypropylene	70 x 28 x 4 *2 3/4 x 1 1/8 x 0.16*	7 *1/4*	100

f = gap thickness



TVM

CONNECTOR FOR DECKING

CALCULATION TOOL

A2 AISI 304

A2 AISI 304

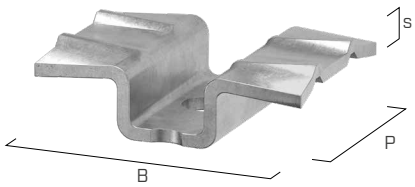

TVM1



TVM2



TVM3



TVMN4

CODE	material	P x B x s [mm] *[in]*	f [mm] *[in]*	pcs
TVM1	A2 | AISI304	22,5 x 31 x 2,4 *7/8 x 1 1/4 x 0.10*	7 ÷ 9 *1/4 ÷ 3/8*	500
TVM2	A2 | AISI304	22,5 x 28 x 2,4 *7/8 x 1 1/8 x 0.10*	7 ÷ 9 *1/4 ÷ 3/8*	500
TVM3	A2 | AISI304	30 x 29.4 x 2.4 *1 3/16 x 1 3/16 x 0.10*	7 ÷ 9 *1/4 ÷ 3/8*	500
TVMN4	A2 | AISI304 with black coating	23 x 36 x 2.4 *7/8 x 1 7/16 x 0.10*	7 ÷ 9 *1/4 ÷ 3/8*	200

f = gap thickness

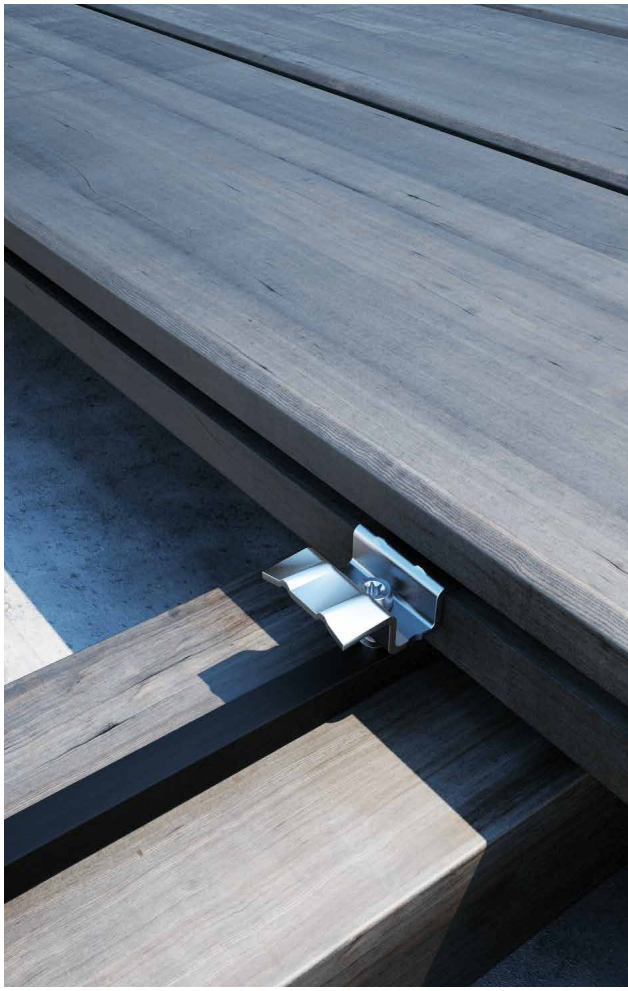

TERRALOCK

CONNECTOR FOR DECKING

CALCULATION TOOL

Zn ELECTRO PLATED

PA

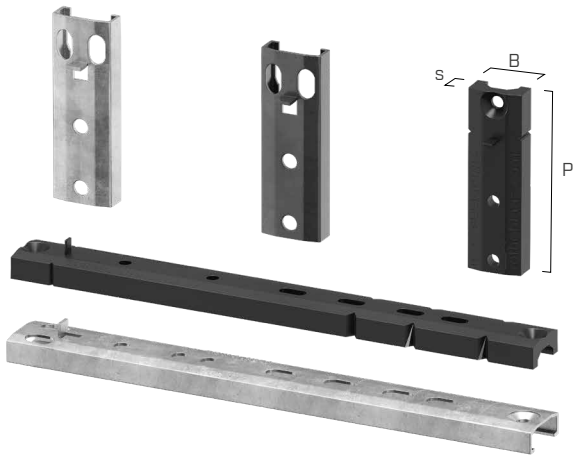

CODE	material	P x B x s [mm] *[in]*	f [mm] *[in]*	pcs
TER60ALU	zinc-plated steel	60 x 20 x 8 *2 3/8 x 13/16 x 5/16*	2 ÷ 10 *1/16 ÷ 3/8*	100
TER180ALU	zinc-plated steel	180 x 20 x 8 *7 1/8 x 13/16 x 5/16*	2 ÷ 10 *1/16 ÷ 3/8*	50
TER60ALUN	zinc-plated steel, black	60 x 20 x 8 *2 3/8 x 13/16 x 5/16*	2 ÷ 10 *1/16 ÷ 3/8*	100
TER180ALUN	zinc-plated steel, black	180 x 20 x 8 *7 1/8 x 13/16 x 5/16*	2 ÷ 10 *1/16 ÷ 3/8*	50
TER60PPM	black nylon	60 x 20 x 8 *2 3/8 x 13/16 x 5/16*	2 ÷ 10 *1/16 ÷ 3/8*	100
TER180PPM	black nylon	180 x 20 x 8 *7 1/8 x 13/16 x 5/16*	2 ÷ 10 *1/16 ÷ 3/8*	50

Upon request also available in A2 | AISI304 stainless steel for quantities over 20.000 pcs. (code **TER60A2** and **TER180A2**).
In the case of dimensionally unstable wood, the use of the metal version is recommended.

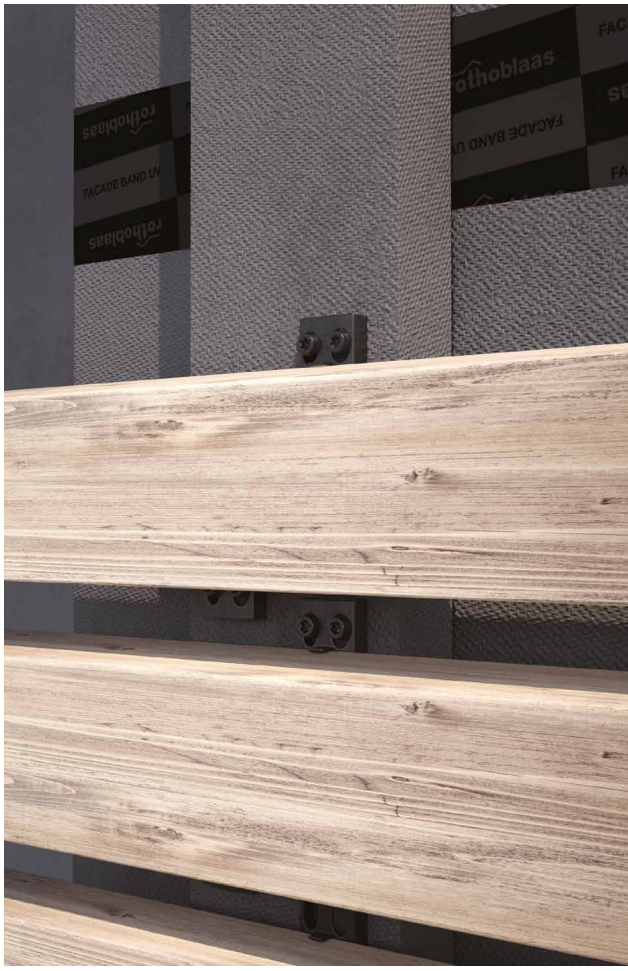

GROUND COVER

ANTI-VEGETATION TARP FOR SUBSTRATES

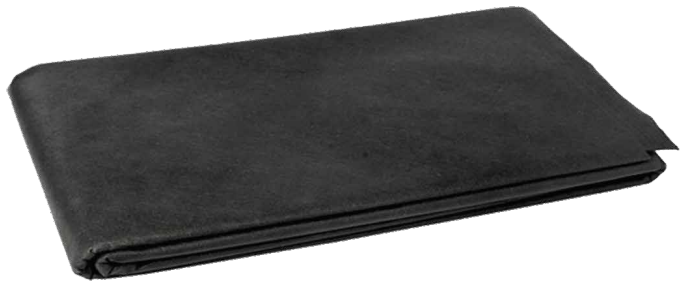



CODE	material	g/m² *oz/ft²*	H x L [m] *[ft]*	A [m²] *[ft²]*	pcs
COVER50	NWF	50 *0.16*	1.6 x 10 *5 x 33*	16 *172*	1

NAG

LEVELING PAD

CALCULATION TOOL

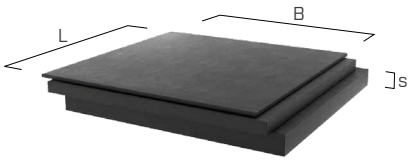



CODE	B x L x s [m] *[in]*	density [kg/m³] *[oz/in³]*	shore	pcs
NAG60602	60 x 60 x 2 *2 3/8 x 2 3/8 x 0.08*	1220 *0.69*	65	50
NAG60603	60 x 60 x 3 *2 3/8 x 2 3/8 x 0.12*	1220 *0.69*	65	30
NAG60605	60 x 60 x 5 *2 3/8 x 2 3/8 x 0.20*	1220 *0.69*	65	20

Operating temperature -35°C | +90°C.

TERRA BAND UV

BUTYL ADHESIVE TAPE





CODE	s [m] *[in]*	B [m] *[in]*	L [m] *[ft]*	pcs
TERRAUV75	0,8 *0.03*	75 *2 15/16*	10 *32*	1
TERRAUV100	0,8 *0.03*	100 *4*	10 *32*	1
TERRAUV200	0,8 *0.03*	200 *8*	10 *32*	1

s: thickness | **B**: base| **L**: length

GRANULO

GRANULAR RUBBER SUBSTRATE

CALCULATION TOOL



GRANULO PAD

GRANULO ROLL

GRANULO MATT

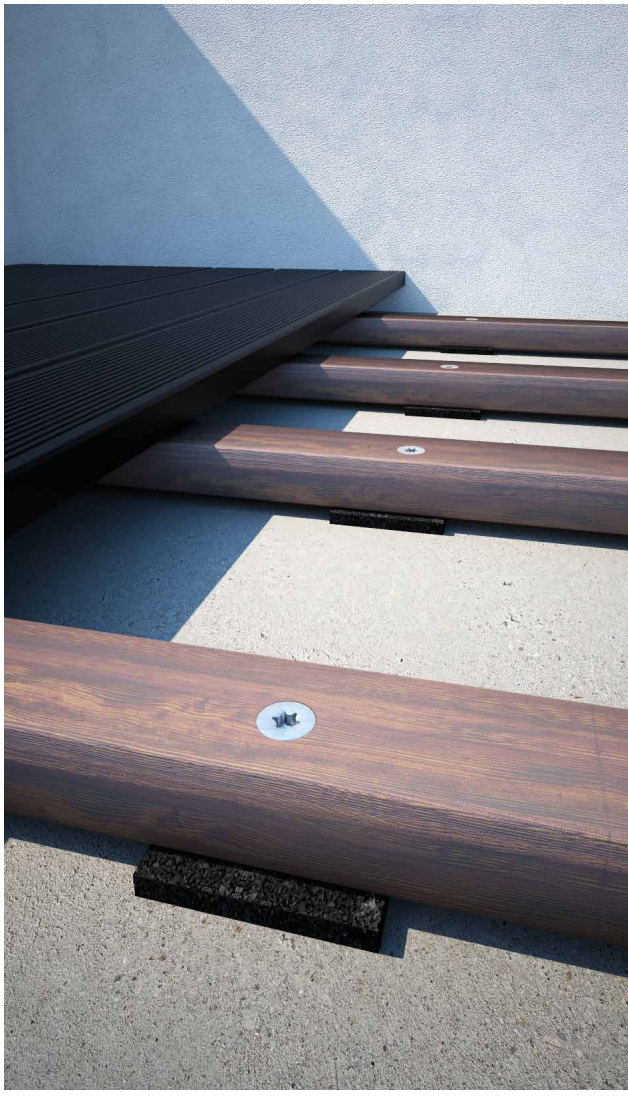

CODE	B [m] *[in]*	L [m] *[ft]*	s [m] *[in]*	pcs
GRANULO100	100 *4*	15 *49*	4 *0.16*	1
GRANULOPAD	80 *3 1/8*	0,08 *0.26*	10 *0.39*	20
GRANULOROLL	80 *3 1/8*	5 *19*	8 *0.31*	1
GRANULOMAT110	1000 *39 3/8*	10 *32*	6 *0.24*	1

s: thickness | **B**: base| **L**: length

PROFID

SPACER PROFILE

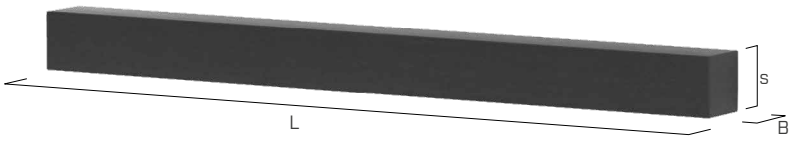



CODE	s [m] *[in]*	B [m] *[in]*	L [m] *[ft]*	density [kg/m^3] *[oz/in^3]*	shore	pcs
PROFID	8 *5/16*	8 *5/16*	40 *131*	1220 *0.69*	65	8

s: thickness | **B**: base| **L**: length

ALU TERRACE

ALUMINIUM PROFILE FOR PATIOS

CALCULATION TOOL



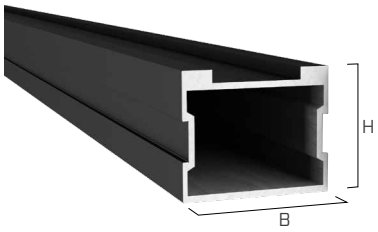



CODE	s [m] [in]	B [m] [in]	P [m] [in]	H [m] [in]	pcs
ALUTERRA30	1,8 *0.08*	53 *2 1/16*	2200 *86 5/8*	30 *1 3/16*	1
ALUTERRA50	2,5 *0.10*	60 *2 3/8*	2200 *86 5/8*	50 *1 15/16*	1

SUPPORT

ADJUSTABLE SUPPORT FOR DECKS

CALCULATION TOOL





SUPPORT CODES

SUP-S

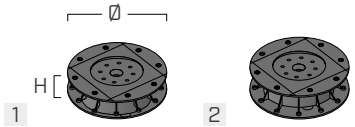

SUP-M

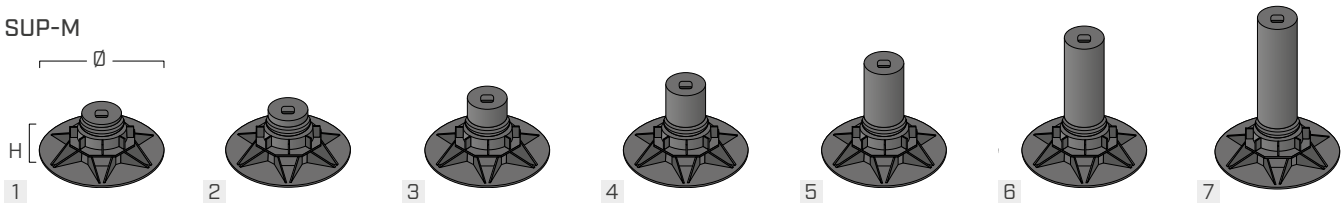

	CODE	Ø [mm]	Ø [in]	H [mm]	H [in]	pcs
1	SUPS2230	150	*5.91*	22 - 30	*7/8 x 1 3/16*	20
2	SUPS2840	150	*5.91*	28 - 40	*1 1/8 x 1 9/16*	20
1	SUPM3550	200	*7.88*	35 - 50	*1 3/8 x 1 15/16*	25
2	SUPM5070	200	*7.88*	50 - 70	*1 15/16 x 2 3/4*	25
3	SUPM65100	200	*7.88*	65 - 100	*2 9/16 x 4*	25
4	SUPM95130	200	*7.88*	95 - 130	*3 3/4 x 5 1/8*	25
5	SUPM125160	200	*7.88*	125 - 160	*4 15/16 x 6 1/4*	25
6	SUPM155190	200	*7.88*	155 - 190	*6 1/8 x 7 1/2*	25
7	SUPM185220	200	*7.88*	185 - 220	*7 1/4 x 8 5/8*	25

SUP-L

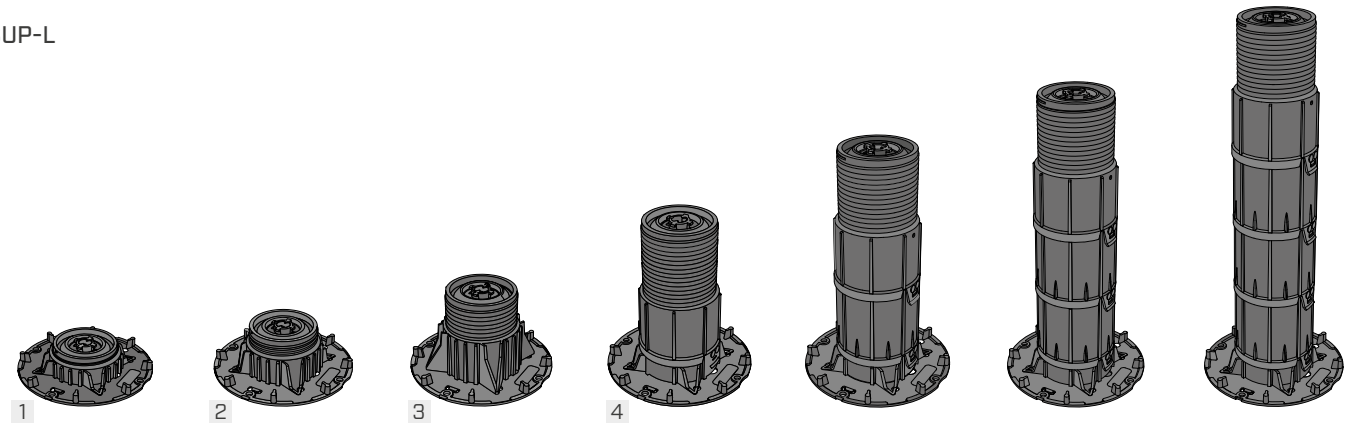

	CODE	Ø		H		pcs
		[mm]	*[in]*	[mm]	*[in]*	
1	**SUPL3750(*)**	200	*7.88*	37 - 50	*1 7/16 x 1 15/16*	20
2	**SUPL5075(*)**	200	*7.88*	50 - 75	*1 15/16 x 2 15/16*	20
3	**SUPL75125(*)**	200	*7.88*	75 - 125	*2 15/16 x 4 15/16*	20
4	**SUPL125225**	200	*7.88*	125 - 225	*4 15/16 x 8 7/8*	20
5	**SUPL225325**	200	*7.88*	225 - 325	*8 7/8 x 12 3/4*	20
6	**SUPL325425**	200	*7.88*	325 - 425	*12 3/4 x 16 3/4*	20
7	**SUPL425525**	200	*7.88*	425 - 525	*16 3/4 x 20 11/16*	20
8	**SUPL525625**	200	*7.88*	525 - 625	*20 11/16 x 24 5/8*	20
9	**SUPL625725**	200	*7.88*	625 - 725	*24 5/8 x 28 9/16*	20
10	**SUPL725825**	200	*7.88*	725 - 825	*28 9/16 x 32 1/2*	20
11	**SUPL825925**	200	*7.88*	825 - 925	*32 1/2 x 36 7/16*	20
12	**SUPL9251025**	200	*7.88*	925 - 1025	*36 7/16 x 40 3/8*	20

(*) SUPLEXT100 extension not usable. Heads to be ordered separately.
Codes 5-12 consist of the product SUPL125225 and of a number of SUPLEXT100 extensions to reach the indicated height range.

HEAD CODES

SUP-S

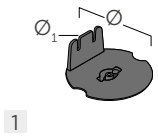

SUP-M

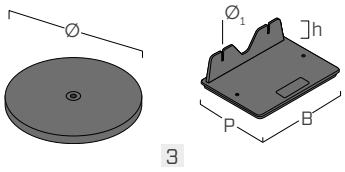

SUP-L

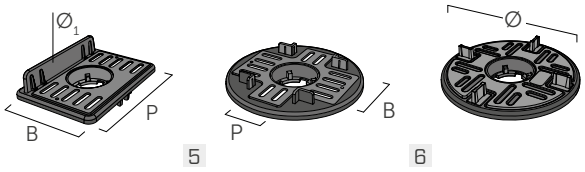

	CODE	application	B x P x H	Ø	$Ø_1$	pcs
			[m] *[in]*	[m] *[in]*	[m] *[in]*	
1	**SUPSLHEAD1**	-	-	70 *2.76*	3 x 14 *3 x 0.56*	20
2	**SUPMHEAD1**	-	-	120 *4.73*	- -	25
3	**SUPMHEAD2**	-	120 x 90 x 30 *4 3/4 x 3 1/2 x 1 3/16*	-	3 x 14 *3 x 0.56*	25
4	**SUPLHEAD1**	timber/aluminium battens	70 x 110 *2 3/4 x 4 3/8*	-	3 x 14 *3 x 0.56*	20
5	**SUPLHEAD2**	timber/aluminium battens	60 x 40 *2 3/8 x 1 9/16*	-	-	20
6	**SUPLHEAD3**	tiles	-	120 *4.73*	-	20

Everything you need to design and build outdoor environments. Download the Outdoor guide on our website or request the catalogue from your trusted agent.

rothoblaas.com



ANCHORS FOR CONCRETE

ANCHORS FOR CONCRETE

SCREW-IN ANCHORS

SKR EVO | SKS EVO
SCREW-IN ANCHOR FOR CONCRETE 524

SKR | SKS | SKP
SCREW-IN ANCHOR FOR CONCRETE CE1 528

MECHANICAL ANCHORS

ABU
HEAVY DUTY EXPANSION ANCHOR 531

ABE
HEAVY DUTY EXPANSION ANCHOR CE1 532

ABE A4
HEAVY DUTY EXPANSION ANCHOR CE1 534

AB1
HEAVY DUTY EXPANSION ANCHOR CE1 536

PLASTIC DOWELS AND SCREWS FOR DOORS AND WINDOWS

NDC
EXTRA-LONG NYLON ANCHOR CE WITH SCREW 538

NDS
EXTRA-LONG ANCHOR WITH SCREW 540

NDB
EXTRA-LONG ANCHOR WITH IMPACT SCREW. 540

NDK
UNIVERSAL NYLON ANCHOR 541

NDL
UNIVERSAL PROLONGED NYLON ANCHOR 541

MBS | MBZ
SELF-TAPPING SCREW FOR MASONRY 542

CHEMICAL ANCHORS

VIN-FIX
VINYL ESTER CHEMICAL ANCHOR WITHOUT STYRENE 545

VIN-FIX PRO NORDIC
VINYL ESTER CHEMICAL ANCHOR FOR LOW TEMPERATURES. 549

HYB-FIX
HIGH-PERFORMANCE HYBRID CHEMICAL ANCHOR 552

EPO-FIX
HIGH-PERFORMANCE EPOXY CHEMICAL ANCHOR 557

ACCESSORIES FOR CHEMICAL ANCHORS

INA
5.8 AND 8.8 STEEL CLASS THREADED ROD FOR CHEMICAL ANCHORS 562

IHP - IHM
BUSHINGS FOR PERFORATED MATERIALS 563

IR-PLU-FILL-BRUH-DUHXA-CAT
ACCESSORIES. 564

ANCHOR CHOICE

The variety of mechanical characteristics and installation parameters of the anchors makes it possible to meet multiple design requirements through different combinations. The use combined with our connection systems offers a complete range of solutions.

SCREW-IN ANCHORS			page
SKR EVO	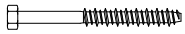	Screw-in anchor with hexagonal head	524
SKS EVO		Screw-in anchor with countersunk head	524
SKR	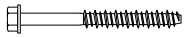	Screw-in anchor with hexagonal head CE1	528
SKS		Screw-in anchor with countersunk head CE1	528
SKP	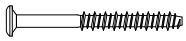	Screw-in anchor with rounded head CE1	528
HEAVY-DUTY METAL ANCHORS			
ABU	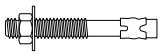	Heavy duty expansion anchor	531
ABE	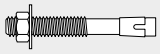	Heavy duty expansion anchor CE1	532
ABE A4	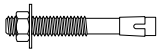	CE1 stainless steel heavy-duty expansion anchor	534
AB1	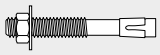	Heavy duty expansion anchor CE1	536
LIGHT ANCHOR			
NDC		Extra-long nylon anchor CE with screw	538
NDS	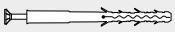	Extra-long anchor with screw	540
NDB		Extra-long anchor with impact screw	540
NDK	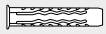	Universal nylon anchor	541
NDL	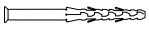	Universal prolonged nylon anchor	541
MBS | MBZ	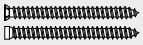	Self-tapping screw for masonry	542
CHEMICAL ANCHORS			
VIN-FIX	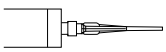	Vinyl ester chemical anchor without styrene	545
VIN-FIX PRO NORDIC	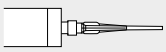	Vinyl ester chemical anchor for low temperatures	549
HYB-FIX	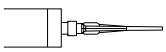	High-performance hybrid chemical anchor	552
EPO-FIX	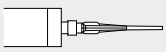	High-performance epoxy chemical anchor	557
INA		5.8 and 8.8 steel class threaded rod for chemical anchors	562
IHP - IHM		Bushings for perforated materials	563
IR		Bushing with internal metric thread	564

ANCHOR MATERIAL				SUPPORT MATERIAL						[mm]	[mm]	CERTIFICATION					INSTAL-LATION		FUNCTIONING		
zinc-plated steel	zinc plated steel C4 EVO	stainless steel	nylon	uncracked concrete	cracked concrete	light concrete	cellular concrete (AAC)	solid masonry	hollow masonry	diameter range	max thickness to fasten	CE (ETA)	seismic category (C1/C2)	fire	LEED (IEQ 4.1)	VOC emission class	through	non-through	by friction (expandable)	by shape (undercut)	by adhesion
-	●	-	-	●	-	-	-	-	-	7,5 ÷ 12	320	-	-	-	-	-	●	-	-	●	-
-	●	-	-	●	-	-	-	-	-	7,5	80	-	-	-	-	-	●	-	-	●	-
●	-	-	-	●	●	-	-	-	-	8 ÷ 16	210	Opt. 1	C2	-	-	-	●	-	-	●	-
●	-	-	-	●	●	-	-	-	-	6 ÷ 10	40	Opt. 1	C2	-	-	-	●	-	-	●	-
●	-	-	-	●	●	-	-	-	-	6	50	Opt. 1	-	-	-	-	●	-	-	●	-
●	-	-	-	●	-	-	-	-	-	M10 ÷ M16	80	-	-	-	-	-	●	-	●	-	-
●	-	-	-	●	●	-	-	-	-	M8 ÷ M16	90	Opt. 1	C2	R120	-	-	●	-	●	-	-
-	-	●	-	●	●	-	-	-	-	M8 ÷ M16	80	Opt. 1	C2	R120	-	-	●	-	●	-	-
●	-	-	-	●	●	-	-	-	-	M10 ÷ M16	84	Opt. 1	C2	R120	-	-	●	-	●	-	-
-	-	-	●	●	●	-	●	●	●	8 ÷ 10	170	CE	-	R90	-	-	●	-	●	-	-
-	-	-	●	●	-	-	-	●	●	10	125	-	-	-	-	-	●	-	●	-	-
-	-	-	●	●	-	-	-	●	●	6 ÷ 8	100	-	-	-	-	-	●	-	●	-	-
-	-	-	●	●	-	-	-	●	●	6 ÷ 14	-	-	-	-	-	-	-	●	●	-	-
-	-	-	●	●	-	-	-	●	●	12 ÷ 16	-	-	-	-	-	-	●	-	●	-	-
●	-	-	-	●	-	●	●	●	●	7,5	-	-	-	-	-	-	●	-	-	●	-
●	-	-	-	●	●	●	●	●	●	M8 ÷ M24	1500	Opt. 1	C2	-	●	A+	●	●	-	-	●
●	-	-	-	●	●	-	-	●	●	M8 ÷ M30	1500	Opt. 1	C1	-	●	-	●	●	-	-	●
●	-	-	-	●	●	-	-	-	-	M8 ÷ M30	1500	Opt. 1	C2	F120	●	A+	●	●	-	-	●
●	-	-	-	●	●	-	-	-	-	M8 ÷ M30	1500	Opt. 1	C2	F120	●	A+	●	●	-	-	●
●	-	-	-	-	-	●	●	●	●	M8 ÷ M27	-	-	-	-	-	-	●	●	-	-	●
●	-	-	●	-	-	●	●	●	●	M8 ÷ M16	-	-	-	-	-	-	●	●	-	-	●
●	-	-	-	●	●	-	-	-	-	M8 ÷ M16	1500	Opt. 1	-	-	-	-	-	●	-	-	●

WORKING PRINCIPLES

The loads acting on the anchor are transferred to the support via three different mechanisms depending on the anchor geometry.

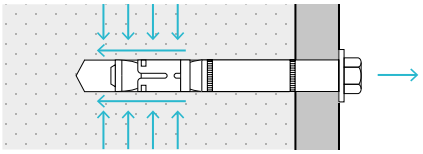

BY FRICTION (EXPANDABLE)
es. AB1

The pull-out capacity is provided by the friction force generated by the anchor expansion within the support.

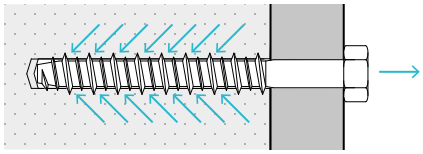

BY SHAPE
e.g. SKR

The anchor geometry allows interlocking with the support, ensuring a reliable fastening.

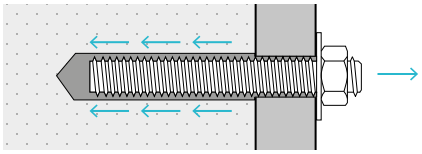

BY ADHESION
e.g. chemical anchors

The tensile loads are transferred to the support by the bond stress along the whole hole surface.

MATERIAL OF THE SUPPORT

CONCRETE

① **UNCRACKED**
compression area
(option 7)

② **CRACKED**
tension area
(option 1)

③ **SEISMIC LOAD**
cyclic loading: alternation between compressed/ stretched area
(C1-C2)

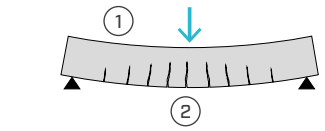

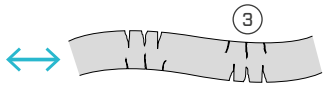

MASONRY

The mechanical properties of a masonry are strongly influenced by the type of base material used (calcium silicate, clay, lightweight concrete, cellular concrete).

SOLID

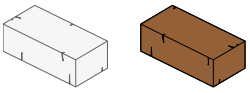

PERFORATED

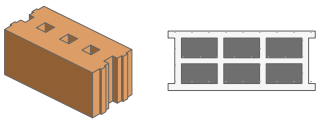

INSTALLATION

ANCHORS SPACING s

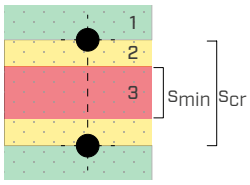

1 maximum-strength area: $s \geq s_{cr}$

2 reduced-strength area: $s_{min} \leq s < s_{cr}$

3 no-fix area: $s < s_{min}$

DISTANCE FROM EDGE c

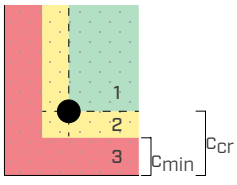

1 maximum-strength area: $c \geq c_{cr}$

2 reduced-strength area: $c_{min} \leq c < c_{cr}$

3 no-fix area: $c < c_{min}$

For edge distance and spacing bigger than the critical values, there is no interaction between the failure mechanisms of the single anchors. The failure cone can develop entirely providing the maximum strength possible. For edge distance and spacing smaller than the critical values, a reduction of the anchor performance should be accounted for by adopting the coefficients listed in the product certificate. It is not allowed to install anchors with edge distance and spacing smaller than the minimal values.

MINIMUM SUPPORT THICKNESS h_{min}

In order to avoid splitting phenomena and consequent significant strength reduction, it is not allowed to install anchors in supports with thickness $h < h_{min}$.

ANCHORAGE DEPTH h_{ef}

The anchors have to be installed ensuring an anchorage depth h_{ef} not less than the prescribed one. Mechanical anchors: generally a single pull-through-depth is adopted for each diameter selected. Chemical anchors: varying pull-through depths according to the boundary conditions in order to optimize the performarce.

FAILURE MECHANISMS

TENSION

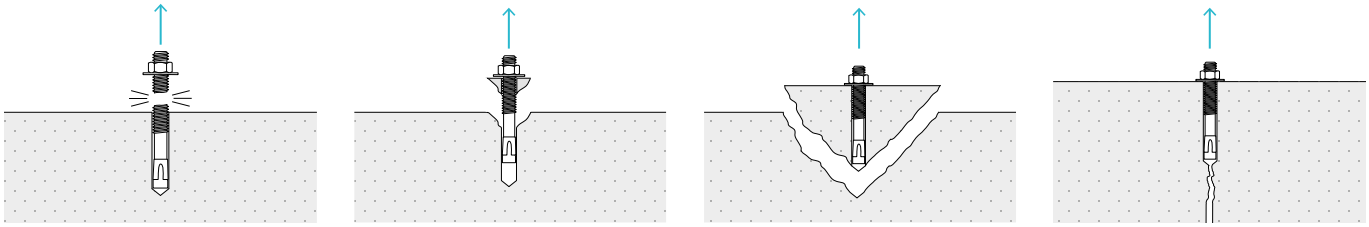

STEEL FAILURE
Steel failure

PULL-OUT
Pull-out failure

CONCRETE CONE FAILURE
Concrete cone failure

SPLITTING
Splitting failure

In case chemical anchors are used, a mechanism with combined pull-out and concrete cone failure is possible.

SHEAR

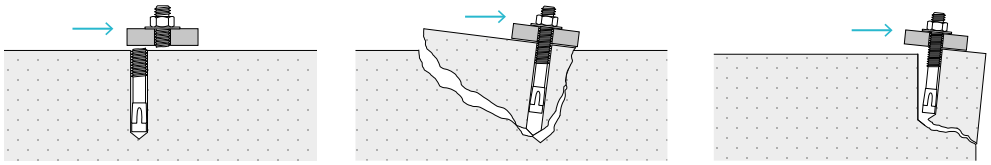

STEEL FAILURE
Steel failure with or without lever arm (eccentricity)

PRY-OUT
Pry-out failure

CONCRETE EDGE FAILURE
Concrete edge failure

INSTALLATION

THROUGH

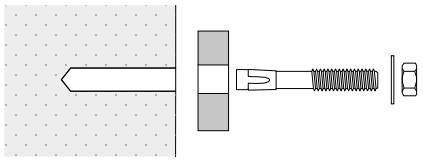

The anchor is inserted into the hole through the element to be fastened. Subsequently the anchor is expanded by applying the prescribed tightening torque. The hole in the element to be fastened is equal to or bigger than the hole in the support material (e.g. AB1, ABE).

NON-THROUGH

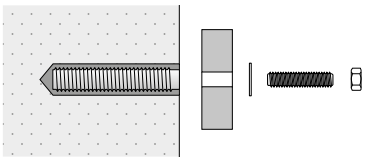

A part of the anchor is inserted into the hole before positioning the element to be fastened. Then the connection is tightened by inserting the screw, as in the case of INA threaded rod with IR internal thread sleeve.

SPACED

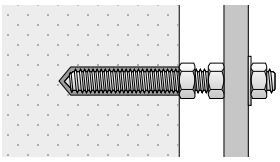

The element to be fastened is anchored at a certain distance from the support. To select the most suitable anchors, please see the product certificates.

SKR EVO | SKS EVO

SCREW-IN ANCHOR FOR CONCRETE

- Suitable for uncracked concrete
- Hexagonal head of increased size
- Thread is suitable for dry fastening
- Through fastening
- No fastener expansion
- Fastening of timber or steel elements to concrete supports

USA, Canada and more design values available online.

SERVICE CLASS	SC1 SC2 SC3
ATMOSPHERIC CORROSIVITY	C1 C2 C3 C4
WOOD CORROSIVITY	T1 T2 T3
MATERIAL	C4 EVO COATING carbon steel with C4 EVO coating



SKR EVO



SKS EVO

CODES AND DIMENSIONS

SKR EVO - hexagonal head

CODE	d_1		L		t_{fix}		$h_{1,min}$		h_{nom}		d_0		$d_{f\ timber}$		$d_{f\ steel}$		SW	T_{inst}		pcs
	[mm]	*[in]*	[mm]	*[in]*	[mm]	*[in]*	[mm]	*[in]*	[mm]	*[in]*	[mm]	*[in]*	[mm]	*[in]*	[mm]	*[in]*	[mm]	[Nm]	*[ft.-lbf]*	
SKREVO7560	7,5	*0.30*	**60**	*2 3/8*	10	*0.39*	60	*2 3/8*	50	*1 15/16*	6	*7/32*	8	*0.30*	8-10	*0.32 - 0.4*	13	15	*11*	50
SKREVO7580			**80**	*3 1/8*	30	*1.18*	60	*2 3/8*	50	*1 15/16*	6	*7/32*	8	*0.30*	8-10	*0.32 - 0.4*	13	15	*11*	50
SKREVO75100			**100**	*4*	20	*0.79*	90	*3 1/2*	80	*3 1/8*	6	*7/32*	8	*0.30*	8-10	*0.32 - 0.4*	13	15	*11*	50
SKREVO1080	10	*0.40*	**80**	*3 1/8*	30	*1.18*	65	*2 9/16*	50	*1 15/16*	8	*5/16*	10	*0.40*	10-12	*0.4 - 0.48*	16	25	*18*	50
SKREVO10100			**100**	*4*	20	*0.79*	95	*3 3/4*	80	*3 1/8*	8	*5/16*	10	*0.40*	10-12	*0.4 - 0.48*	16	25	*18*	25
SKREVO10120			**120**	*4 3/4*	40	*1.57*	95	*3 3/4*	80	*3 1/8*	8	*5/16*	10	*0.40*	10-12	*0.4 - 0.48*	16	25	*18*	25
SKREVO10140			**140**	*5 1/2*	60	*2.36*	95	*3 3/4*	80	*3 1/8*	8	*5/16*	10	*0.40*	10-12	*0.4 - 0.48*	16	25	*18*	25
SKREVO10160			**160**	*6 1/4*	80	*3.15*	95	*3 3/4*	80	*3 1/8*	8	*5/16*	10	*0.40*	10-12	*0.4 - 0.48*	16	25	*18*	25
SKREVO12100	12	*0.48*	**100**	*4*	20	*0.79*	100	*4*	80	*3 1/8*	10	*3/8*	12	*0.48*	12-14	*0.48 - 0.56*	18	50	*36*	25
SKREVO12120			**120**	*4 3/4*	40	*1.57*	100	*4*	80	*3 1/8*	10	*3/8*	12	*0.48*	12-14	*0.48 - 0.56*	18	50	*36*	25
SKREVO12140			**140**	*5 1/2*	60	*2.36*	100	*4*	80	*3 1/8*	10	*3/8*	12	*0.48*	12-14	*0.48 - 0.56*	18	50	*36*	25
SKREVO12160			**160**	*6 1/4*	80	*3.15*	100	*4*	80	*3 1/8*	10	*3/8*	12	*0.48*	12-14	*0.48 - 0.56*	18	50	*36*	25
SKREVO12200			**200**	*8*	120	*4.72*	100	*4*	80	*3 1/8*	10	*3/8*	12	*0.48*	12-14	*0.48 - 0.56*	18	50	*36*	25
SKREVO12240			**240**	*9 1/2*	160	*6.30*	100	*4*	80	*3 1/8*	10	*3/8*	12	*0.48*	12-14	*0.48 - 0.56*	18	50	*36*	25
SKREVO12280			**280**	*11*	200	*7.87*	100	*4*	80	*3 1/8*	10	*3/8*	12	*0.48*	12-14	*0.48 - 0.56*	18	50	*36*	25
SKREVO12320			**320**	*12 5/8*	240	*9.45*	100	*4*	80	*3 1/8*	10	*3/8*	12	*0.48*	12-14	*0.48 - 0.56*	18	50	*36*	25
SKREVO12400			**400**	*15 3/4*	320	*12.60*	100	*4*	80	*3 1/8*	10	*3/8*	12	*0.48*	12-14	*0.48 - 0.56*	18	50	*36*	25

SKS EVO - countersunk head

CODE	d_1		L		t_{fix}		$h_{1,min}$		h_{nom}		d_0		$d_{f\ timber}$		d_k		TX	T_{inst}	pcs
	[mm]	*[in]*	[mm]	*[in]*	[mm]	*[in]*	[mm]	*[in]*	[mm]	*[in]*	[mm]	*[in]*	[mm]	*[in]*	[mm]	*[in]*		[Nm]	
SKSEVO7560	7,5	*0.30*	**60**	*2 3/8*	10	*0.39*	60	*2 3/8*	50	*1 15/16*	6	*7/32*	8	*0.30*	13	***0,52***	TX40	-	50
SKSEVO7580			**80**	*3 1/8*	30	*1.18*	60	*2 3/8*	50	*1 15/16*	6	*7/32*	8	*0.30*	13	***0,52***	TX40	-	50
SKSEVO75100			**100**	*4*	20	*0.79*	90	*3 1/2*	80	*3 1/8*	6	*7/32*	8	*0.30*	13	***0,52***	TX40	-	50
SKSEVO75120			**120**	*4 3/4*	40	*1.57*	90	*3 1/2*	80	*3 1/8*	6	*7/32*	8	*0.30*	13	***0,52***	TX40	-	50
SKSEVO75140			**140**	*5 1/2*	60	*2.36*	90	*3 1/2*	80	*3 1/8*	6	*7/32*	8	*0.30*	13	***0,52***	TX40	-	50
SKSEVO75160			**160**	*6 1/4*	80	*3.15*	90	*3 1/2*	80	*3 1/8*	6	*7/32*	8	*0.30*	13	***0,52***	TX40	-	50

GEOMETRY

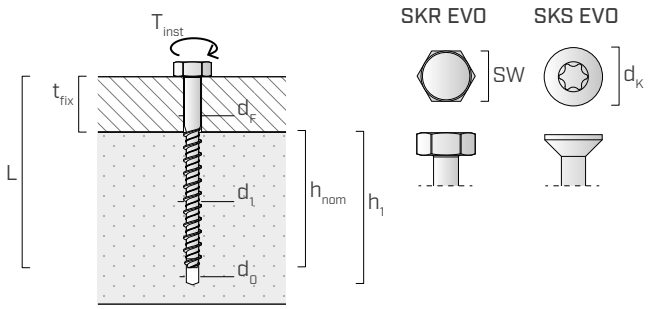

d_1	external diameter of anchor
L	anchor length
t_{fix}	maximum fastening thickness
h_1	minimum hole depth
h_{nom}	nominal anchoring depth
d_0	hole diameter in the concrete support
d_F	maximum hole diameter in the element to be fastened
SW	wrench size
d_K	head diameter
T_{inst}	tightening torque

ADDITIONAL PRODUCTS - ACCESSORIES

CODE	description	pcs
SOCKET13	SW 13 bushing 1/2" connection	1
SOCKET16	SW 16 bushing 1/2" connection	1
SOCKET18	SW 18 bushing 1/2" connection	1

MOUNTING

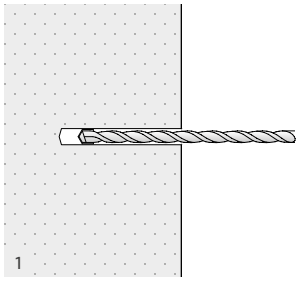

Drill a hole in rotary percussion mode

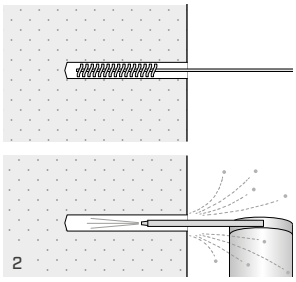

Clean the hole

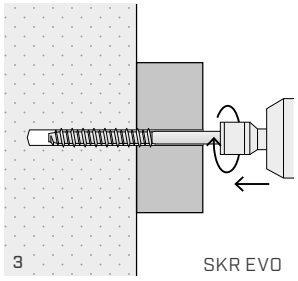

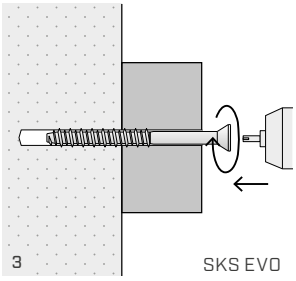

Position the object to be fixed and install the screw with a pulse screw gun

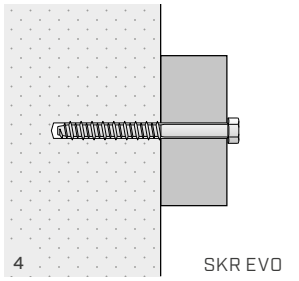

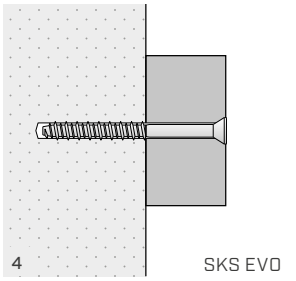

Ensure the anchor head is in complete contact with the object to be fixed

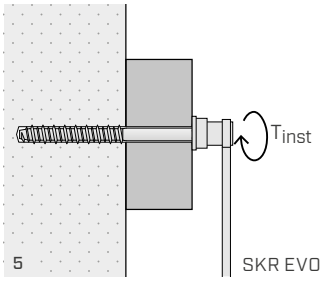

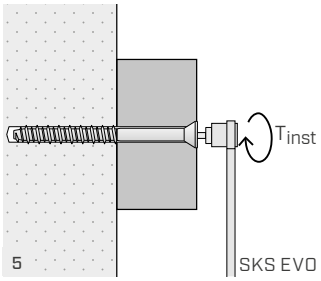

Check the tightening torque T_{inst}

INSTALLATION

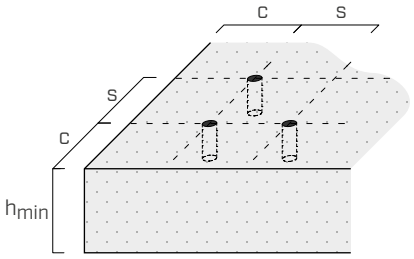

			SKR EVO			SKS EVO
Spacing and distances for tensile loads			**Ø7,5**	**Ø10**	**Ø12**	**Ø7,5**
Minimum spacing	$s_{min,N}$	[mm]	50	60	65	50
Minimum edge distance	$c_{min,N}$	[mm]	50	60	65	50
Minimum thickness of concrete support	h_{min}	[mm]	100	110	130	100
Critical spacing	$s_{cr,N}$	[mm]	100	150	180	100
Critical edge distance	$c_{cr,N}$	[mm]	50	70	80	50

Spacing and distances for shear loads			**Ø7,5**	**Ø10**	**Ø12**	**Ø7,5**
Minimum spacing	$s_{min,V}$	[mm]	50	60	70	50
Minimum edge distance	$c_{min,V}$	[mm]	50	60	70	50
Minimum thickness of concrete support	h_{min}	[mm]	100	110	130	100
Critical spacing	$s_{cr,V}$	[mm]	140	200	240	140
Critical edge distance	$c_{cr,V}$	[mm]	70	110	130	70

For spacing and distances smaller than the critical ones, strength values have to be reduced depending on the installation parameters.

STRUCTURAL VALUES

Valid for a single anchor in thickened C20/25 grade concrete with a thin reinforcing layer when spacing and edge-distance are not limiting parameters.

ADMISSIBLE VALUES

		UNCRACKED CONCRETE		
		tension	**shear**[1]	**head pull-through**
		$N_{1,rec}$ [kN]	V_{rec} [kN]	$N_{2,rec}$ [kN]
SKR EVO	**7,5**	2,13	2,50	1,19[2]
	10	6,64	6,65	1,86[2]
	12	8,40	8,18	2,83[2]
SKS EVO	**7,5**	2,13	2,50	0,72

NOTES

(1) When evaluating the anchor global-strength, the shear strength on the element to be fastened (e.g. timber, concrete, etc.) must be considered separately based on the material adopted.

(2) All values refer to SKR installed with DIN 9021 (ISO 9073) washer.

GENERAL PRINCIPLES

- Recommended admissible shear and tensile values are compliant with Certificate Nr. 2006/5205/1 released from Politecnico di Milano and obtained by considering a safety factor of 4 for the failure load.



First rule
Do not fall

Accidents at heights happen more often than you think, which is why it is important to entrust your safety to professionals.

From design to installation, from certification to maintenance: our technical consultants are at your disposal and will help **secure you and your employees at all stages of the project**.



Protect your work with us:

rothoblaas.com

rothoblaas

Solutions for Building Technology

SKR | SKS | SKP

SCREW-IN ANCHOR FOR CONCRETE CE1

MY PROJECT SOFTWARE | SEISMIC C2 | CE ETA-24/0024

- CE option 1 for cracked and uncracked concrete
- Seismic performance category C1 and C2 (M10-M16)
- Through fastening
- No fastener expansion
- Flange head with self-locking knurling for metal-to-concrete applications (SKR-SKP)
- Countersunk head for timber-to-concrete applications (SKS)
- Flange head for thin plate applications (SKP)

USA, Canada and more design values available online.

SERVICE CLASS	SC1 SC2
ATMOSPHERIC CORROSIVITY	C1 C2
WOOD CORROSIVITY	T1 T2
MATERIAL	Zn ELECTRO PLATED electrogalvanized carbon steel

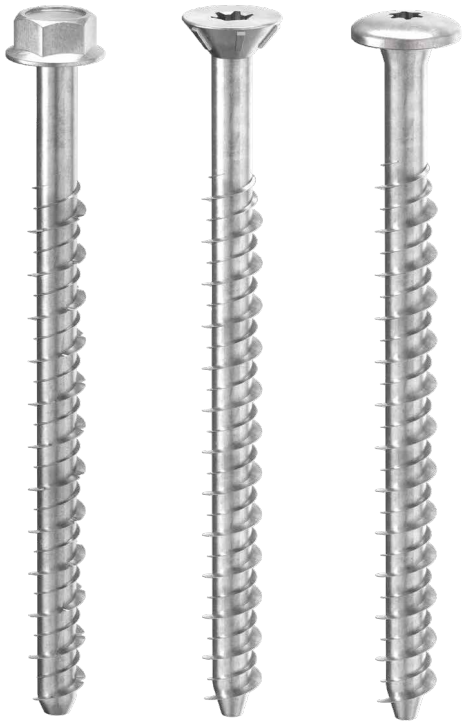

SKR SKS SKP

CODES AND DIMENSIONS

SKR - hexagonal head with mock washer

CODE	d_1	L		t_{fix}		h_1		h_{nom}		h_{ef}		d_0		d_F		SW	T_{inst} (*)		pcs
	[mm] *[in]*	[mm]	*[in]*	[mm]	*[in]*	[mm]	*[in]*	[mm]	*[in]*	[mm]	*[in]*	[mm]	*[in]*	[mm]	*[in]*	[mm]	[Nm]	*[ft.-lbf]*	
SKR8100	**8** *0.32*	100	*4*	40	*1.57*	75	*2 15/16*	60	*2 3/8*	48	*1 7/8*	6	*7/32*	9	*0.35*	10	210	*154*	50
SKR1080	**10** *0.40*	80	*3 1/8*	10	*0.39*	85	*3 3/8*	70	*2 3/4*	56	*2 3/16*	8	*5/16*	12	*0.47*	13	210	*154*	50
SKR10100		100	*4*	30	*1.18*	85	*3 3/8*	70	*2 3/4*	56	*2 3/16*	8	*5/16*	12	*0.47*	13	210	*154*	25
SKR10120		120	*4 3/4*	50	*1.97*	85	*3 3/8*	70	*2 3/4*	56	*2 3/16*	8	*5/16*	12	*0.47*	13	210	*154*	25
SKR1290	**12** *0.48*	90	*3 1/2*	10	*0.39*	100	*4*	80	*3 1/8*	64	*2 1/2*	10	*3/8*	14	*0.55*	15	330	*243*	25
SKR12110		110	*4 3/8*	30	*1.18*	100	*4*	80	*3 1/8*	64	*2 1/2*	10	*3/8*	14	*0.55*	15	330	*243*	25
SKR12150		150	*6*	70	*2.76*	100	*4*	80	*3 1/8*	64	*2 1/2*	10	*3/8*	14	*0.55*	15	330	*243*	25
SKR12210		210	*8 1/4*	130	*5.12*	100	*4*	80	*3 1/8*	64	*2 1/2*	10	*3/8*	14	*0.55*	15	330	*243*	20
SKR12250		250	*10*	170	*6.69*	100	*4*	80	*3 1/8*	64	*2 1/2*	10	*3/8*	14	*0.55*	15	330	*243*	15
SKR12290		290	*11 7/16*	210	*8.27*	100	*4*	80	*3 1/8*	64	*2 1/2*	10	*3/8*	14	*0.55*	15	330	*243*	15
SKR16130	**16** *0.63*	130	*5 1/8*	20	*0.79*	140	*5 1/2*	110	*4 3/8*	85	*3 3/8*	14	*9/16*	18	*0.71*	21	330	*243*	10

(*) Maximum pulse screw gun power setting values (see installation sequence).

SKS - countersunk head

CODE	d_1	L		t_{fix}		h_1		h_{nom}		h_{ef}		d_0		d_F		d_K		TX	pcs
	[mm] *[in]*	[mm]	*[in]*	[mm]	*[in]*	[mm]	*[in]*	[mm]	*[in]*	[mm]	*[in]*	[mm]	*[in]*	[mm]	*[in]*	[mm]	*[in]*		
SKS660	**6** *0.24*	60	*2 3/8*	10	*0.39*	55	*2 3/16*	50	*1 15/16*	38	*1 1/2*	5	*3/16*	7	*0.28*	11	*0.43*	TX 30	100
SKS880	**8** *0.32*	80	*3 1/8*	20	*0.79*	75	*2 15/16*	60	*2 3/8*	48	*1 7/8*	6	*7/32*	9	*0.35*	14	*0.55*	TX 30	50
SKS8100		100	*4*	40	*1.57*	75	*2 15/16*	60	*2 3/8*	48	*1 7/8*	6	*7/32*	9	*0.35*	14	*0.55*	TX 30	50
SKS10100	**10** *0.40*	100	*4*	30	*1.18*	85	*3 3/8*	70	*2 3/4*	56	*2 3/16*	8	*5/16*	12	*0.47*	20	*0.79*	TX 40	50

SKP - convex head

CODE	d_1	L		t_{fix}		h_1		h_{nom}		h_{ef}		d_0		d_F		d_K		TX	pcs
	[mm] *[in]*	[mm]	*[in]*	[mm]	*[in]*	[mm]	*[in]*	[mm]	*[in]*	[mm]	*[in]*	[mm]	*[in]*	[mm]	*[in]*	[mm]	*[in]*		
SKP680	**6** *0.24*	80	*3 1/8*	30	*1.18*	55	*2 3/16*	50	*1 15/16*	38	*1 1/2*	5	*3/16*	7	*0.28*	12	*0.47*	TX 30	50
SKP6100		100	*4*	50	*1.97*	55	*2 3/16*	50	*1 15/16*	38	*1 1/2*	5	*3/16*	7	*0.28*	12	*0.47*	TX 30	50

GEOMETRY

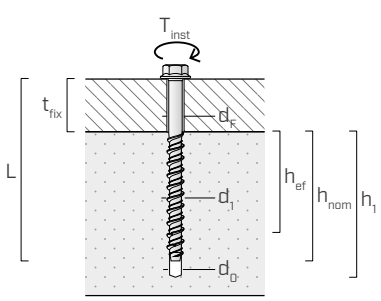

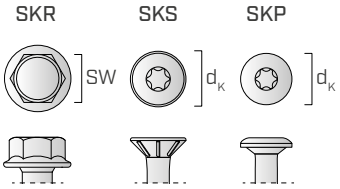

d_1	external diameter of anchor
L	anchor length
t_{fix}	maximum fastening thickness
h_1	minimum hole depth
h_{nom}	nominal anchoring depth
h_{ef}	effective anchoring depth
d_0	hole diameter in the concrete support
d_F	maximum hole diameter in the element to be fastened
SW	wrench size
d_K	head diameter
T_{inst}	tightening torque

ADDITIONAL PRODUCTS - ACCESSORIES

CODE	description	pcs
SOCKET10	SW 10 bushing 1/2" connection	1
SOCKET13	SW 13 bushing 1/2" connection	1
SOCKET15	SW 15 bushing 1/2" connection	1
SOCKET21	SW 21 bushing 1/2" connection	1

MOUNTING

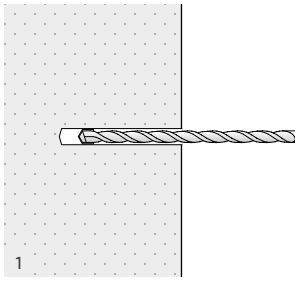

Drill a hole in rotary percussion mode

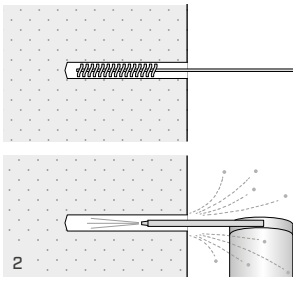

Clean the hole

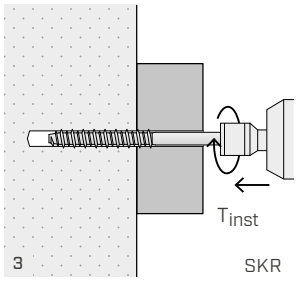

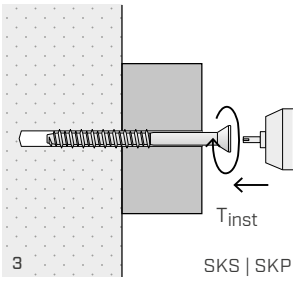

Position the object to be fastened and install the screw with a pulse screw gun respecting the T_{inst} value

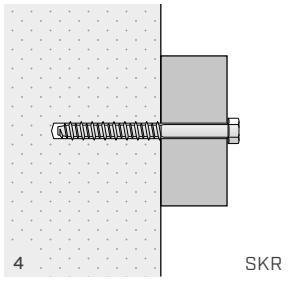

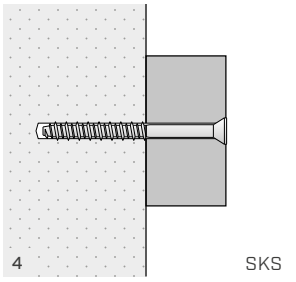

Make certain that the screw head is in complete contact with the object to be fixed

MECHANICAL EXPANSION ANCHORS RANGE

ABU

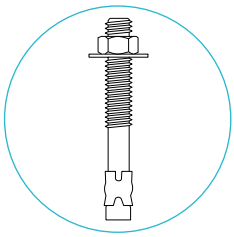

Heavy duty expansion anchor

ABE

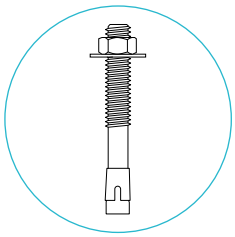

Heavy duty expansion anchor CE1

ABE A4

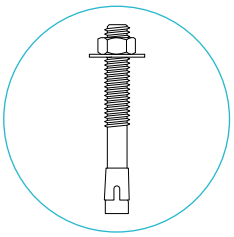

CE1 stainless steel heavy-duty expansion anchor

AB1

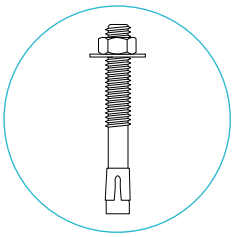

Heavy duty expansion anchor CE1

The table below shows the different mechanical expansion anchors and their respective available lengths, divided by diameter, in order to facilitate the identification of the best solution.

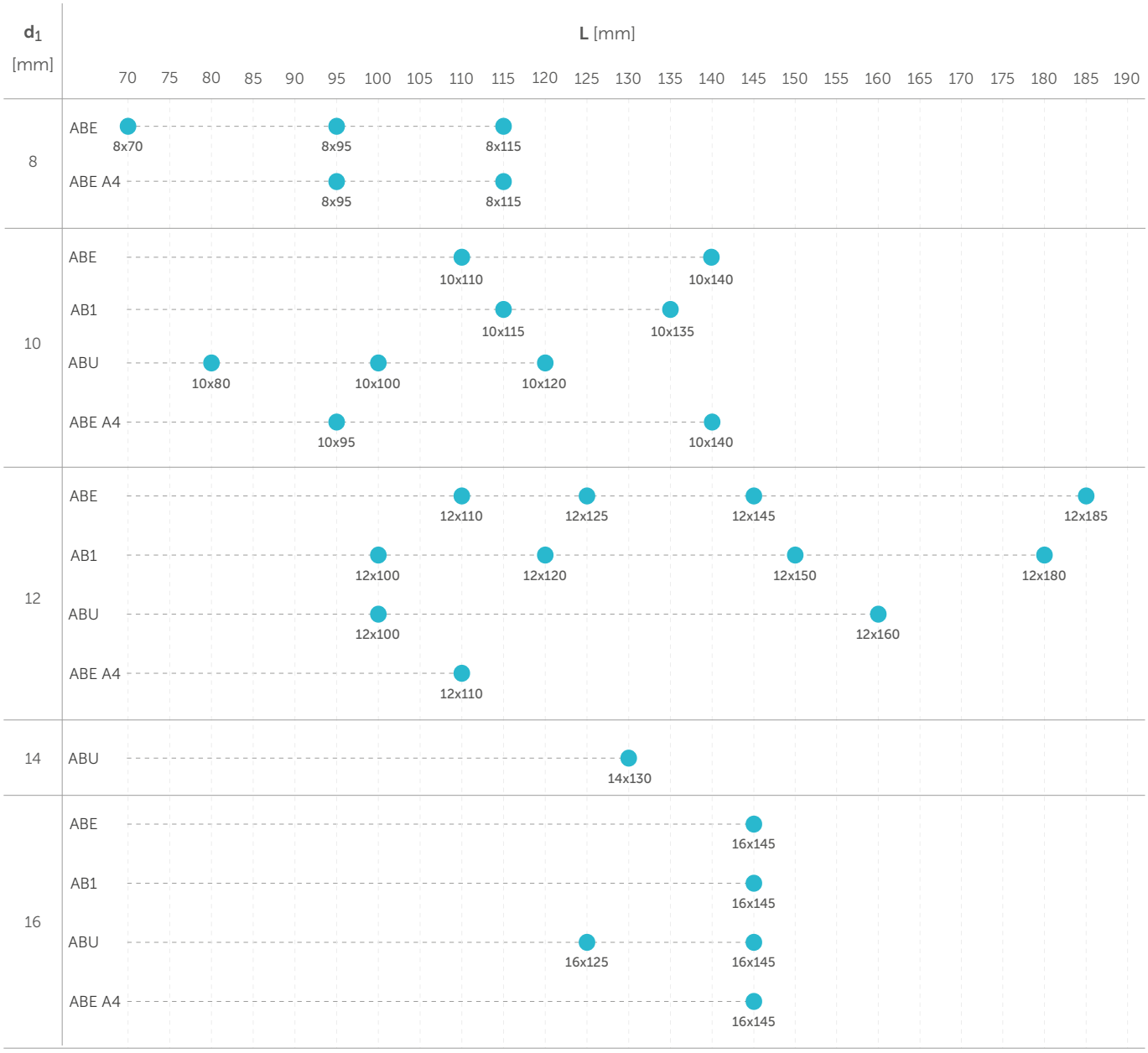

ABU

HEAVY DUTY EXPANSION ANCHOR



- Complete with nut and washer
- Long thread
- Electrogalvanized carbon steel
- Through fastening
- Torque-controlled expansion
- Suitable for dense materials

SERVICE CLASS	SC1 SC2	MATERIAL	Zn ELECTRO PLATED electrogalvanized carbon steel
ATMOSPHERIC CORROSIVITY	C1 C2		

CODES AND DIMENSIONS

CODE	d = d_0	L_t		t_{fix}		f		h_1		d_f		SW	T_{inst}		pcs
	[mm] *[in]*	[mm]	*[in]*	[mm]	*[in]*	[mm]	*[in]*	[mm]	*[in]*	[mm]	*[in]*	[mm]	[Nm]	*[ft.-lbf]*	
ABU1080	**10** *0.40*	**80**	*3 1/8*	20	*0.79*	45	*1.77*	50	*1 15/16*	12	*0.47*	17	30	*22*	50
ABU10100		**100**	*4*	40	*1.57*	62	*2.44*	50	*1 15/16*	12	*0.47*	17	30	*22*	50
ABU10120		**120**	*4 3/4*	60	*2.36*	74	*2.91*	50	*1 15/16*	12	*0.47*	17	30	*22*	25
ABU12100	**12** *0.48*	**100**	*4*	20	*0.79*	62	*2.44*	65	*2 9/16*	14	*0.55*	19	80	*59*	25
ABU12160		**160**	*6 1/4*	80	*3.15*	106	*4.17*	65	*2 9/16*	14	*0.55*	19	80	*59*	25
ABU14130	**14** *0.56*	**130**	*5 1/8*	20	*0.79*	80	*3.15*	75	*2 15/16*	16	*0.63*	22	100	*73*	15
ABU16125	**16** *0.63*	**125**	*4 15/16*	20	*0.79*	68	*2.68*	85	*3 3/8*	18	*0.71*	24	140	*103*	15
ABU16145		**145**	*5 11/16*	40	*1.57*	92	*3.62*	85	*3 3/8*	18	*0.71*	24	140	*103*	15

GEOMETRY

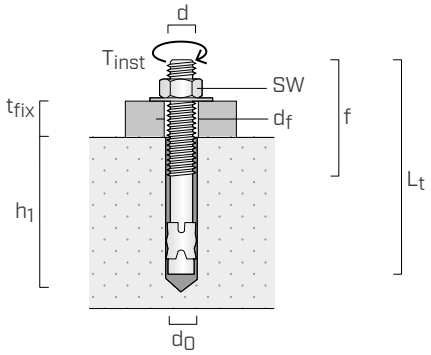

d	anchor diameter
d_0	hole diameter in the concrete support
L_t	anchor length
t_{fix}	maximum fastening thickness
f	thread length
h_1	minimum hole depth
SW	wrench size
T_{inst}	tightening torque

ABE

HEAVY DUTY EXPANSION ANCHOR CE1



- CE option 1 for cracked and uncracked concrete
- Seismic performance category C1 (M8-M10-M12-M16) and C2 (M10-M12-M16)
- 1000 hours of exposure in salt spray test according to EN ISO 9227:2012
- Fire resistance R120
- Complete with nut and washer
- Suitable for dense materials
- Through fastening
- Torque-controlled expansion

USA, Canada and more design values available online.

SERVICE CLASS	SC1 SC2	MATERIAL	Zn ELECTRO PLATED bright zinc-plated carbon steel with zinc-nickel coating
ATMOSPHERIC CORROSIVITY	C1 C2		

CODES AND DIMENSIONS

CODE	d = d_0		L_t		t_{fix} | $t_{fix,red}$		h_1 | $h_{1,red}$		h_{nom} | $h_{nom,red}$		h_{ef} | $h_{ef,red}$		d_f		SW	T_{inst}		pcs
	[mm]	*[in]*	[mm]	*[in]*	[mm]	*[in]*	[mm]	*[in]*	[mm]	*[in]*	[mm]	*[in]*	[mm]	*[in]*	[mm]	[Nm]	*[ft.-lbf]*	
ABE870	M8	*0.32*	**70**	***2 3/4***	5	*0.20*	65	*2 9/16*	55	*2 3/16*	48	*1 7/8*	9	*0.35*	13	20	*14*	100
ABE895	M8	*0.32*	**95**	***3 3/4***	25	*0.98*	65	*2 9/16*	55	*2 3/16*	48	*1 7/8*	9	*0.35*	13	20	*14*	100
ABE8115	M8	*0.32*	**115**	***4 1/2***	45	*1.77*	65	*2 9/16*	55	*2 3/16*	48	*1 7/8*	9	*0.35*	13	20	*14*	100
ABE10110	M10	*0.40*	**110**	***4 3/8***	30 | 50	*1.18 | 1.97*	80 | 60	*3 1/8 | 2 3/8*	70 | 50	*2 3/4 | 1 15/16*	60 | 40	*2 3/8 | 1 9/16*	12	*0.47*	17	45	*33*	50
ABE10140	M10	*0.40*	**140**	***5 1/2***	60 | 80	*2.36 | 3.15*	80 | 60	*3 1/8 | 2 3/8*	70 | 50	*2 3/4 | 1 15/16*	60 | 40	*2 3/8 | 1 9/16*	12	*0.47*	17	45	*33*	50
ABE12110	M12	*0.48*	**110**	***4 3/8***	15	*0.59*	90	*3 1/2*	81	*3 3/16*	70	*2 3/4*	14	*0.55*	19	60	*44*	50
ABE12125	M12	*0.48*	**125**	***4 15/16***	30	*1.18*	90	*3 1/2*	81	*3 3/16*	70	*2 3/4*	14	*0.55*	19	60	*44*	50
ABE12145	M12	*0.48*	**145**	***5 11/16***	50	*1.97*	90	*3 1/2*	81	*3 3/16*	70	*2 3/4*	14	*0.55*	19	60	*44*	50
ABE12185	M12	*0.48*	**185**	***7 1/4***	90	*3.54*	90	*3 1/2*	81	*3 3/16*	70	*2 3/4*	14	*0.55*	19	60	*44*	50
ABE16145	M16	*0.63*	**145**	***5 11/16***	30	*1.18*	110	*4 3/8*	98	*3 7/8*	80	*3 1/8*	18	*0.71*	24	80	*59*	25

GEOMETRY

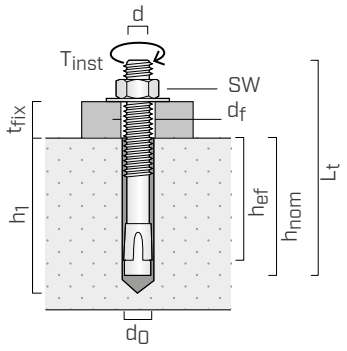

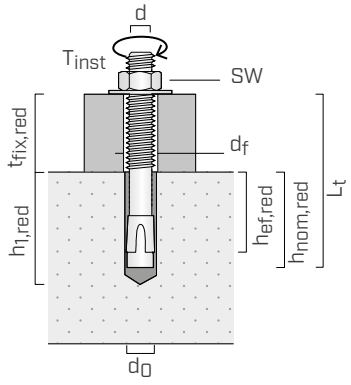

d	anchor diameter
d_0	hole diameter in the concrete support
L_t	anchor length
t_{fix}	maximum fastening thickness
h_1	minimum hole depth
h_{nom}	nominal anchoring depth
h_{ef}	effective anchoring depth
d_f	maximum hole diameter in the element to be fastened
SW	wrench size
T_{inst}	tightening torque

MOUNTING

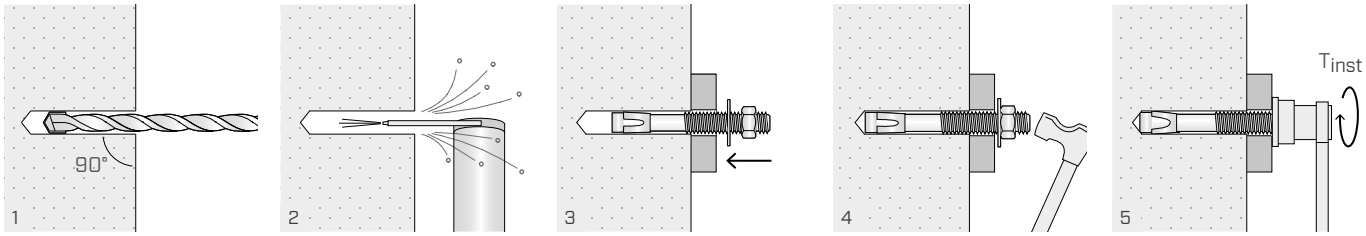

INSTALLATION

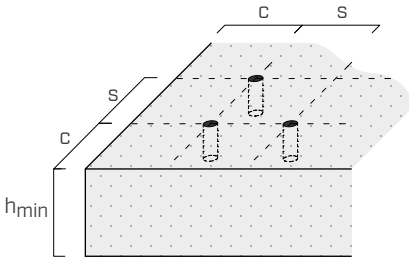

Spacing and minimum distances			M8	M10	M12	M16
Minimum spacing	s_{min}	[mm]	60	80	110	130
Minimum edge distance	c_{min}	[mm]	70	55	60	90
Minimum thickness of concrete support	h_{min}	[mm]	110	120	140	160
Spacing and critical distances			**M8**	**M10**	**M12**	**M16**
Critical spacing	$s_{cr,N}$ (1)	[mm]	144	$3 \cdot h_{ef}$	210	240
	$s_{cr,sp}$ (2)	[mm]	192	240	280	280
Critical edge distance	$c_{cr,N}$ (1)	[mm]	72	$1{,}5 \cdot h_{ef}$	105	120
	$c_{cr,sp}$ (2)	[mm]	96	120	140	140

For spacing and distances smaller than the critical ones, strength values have to be reduced depending on the installation parameters.
For h_{ef} values see table of codes and dimensions.

STRUCTURAL VALUES

Valid for a single anchor in thickened C20/25 grade concrete with a thin reinforcing layer when spacing and edge-distance are not limiting parameters.

CHARACTERISTIC VALUES

	UNCRACKED CONCRETE				CRACKED CONCRETE			
rod	**tension** (3)		**shear** (4)		**tension** (3)		**shear**	
	$N_{Rk,p}$ [kN]	γ_{Mp}	$V_{Rk,s}$ [kN]	γ_{Ms}	$N_{Rk,p}$ [kN]	γ_{Mp}	$V_{Rk,s}$ [kN]	γ_M
M8	9	1,5	9,2	1,5	4	1,5	9,2	1,5
M10*	7,5 | 15		9,1 | 14,5		5,5 | 7,5		9,1 | 14,5	
M12	18		21,1		16		21,1	
M16	26		34		20		34	

*The values refer to the installation of the dowel with the insertion depth value of: h_{nom}=50mm | $h_{nom=70mm}$ respectively.

Ψ_c incremental factor for $N_{Rk,p}$ (5) uncracked concrete			
	C30/37	**C40/50**	**C50/60**
M8	1,12	1,21	1,28
M10*	1,18 | 1,22	1,32 | 1,41	1,45 | 1,58
M12	1,20	1,36	1,50
M16	1,17	1,31	1,42

Ψ_c incremental factor for $N_{Rk,p}$ (5) cracked concrete			
	C30/37	**C40/50**	**C50/60**
M8	1,22	1,41	1,57
M10*	1,04 | 1,18	1,06 | 1,32	1,08 | 1,45
M12	1,22	1,41	1,58
M16	1,19	1,35	1,49

*The values refer to the installation of the dowel with the insertion depth value of: h_{nom}=50mm | $h_{nom=70mm}$ respectively.

NOTES

(1) Breakage characteristics for formation of concrete cone for tensile loads.
(2) Splitting failure mode for tensile loads.
(3) Pull-out failure mode.
(4) Steel failure mode.
(5) Tensile-strength increment factor (excluding steel failure).

GENERAL PRINCIPLES

- Characteristic values according to ETA-20/0295.
- The design values are obtained from the characteristic values as follows: $R_d = R_k/\gamma_M$.
  Coefficients γ_M are listed in the table in accordance with the failure characteristics and product certificates.
- For the calculation of anchors with reduced spacing, or too close to the edge, please refer to ETA. Similarly, in case of fastening on concrete-supports with a better-grade, limited thickness or a thick reinforcing layer please see ETA.
- For the design of anchors subjected to seismic loading refer to ETA and to EN 1992-4:2018.
- For the calculation of anchors subjected to fire refer to the ETA and the Technical Report 020.

ABE A4

HEAVY DUTY EXPANSION ANCHOR CE1

- CE option 1 for cracked and uncracked concrete
- Seismic performance category C1 (M8-M10-M12-M16) and C2 (M10-M12-M16)
- Fire resistance R120
- Complete with nut and washer
- Suitable for dense materials
- Through fastening
- Torque-controlled expansion



USA, Canada and more design values available online.

SERVICE CLASS	SC1 SC2 SC3 SC4
ATMOSPHERIC CORROSIVITY	C1 C2 C3 C4 C5
MATERIAL	A4 AISI 316 — A4 | AISI316 austenitic stainless steel

CODES AND DIMENSIONS

CODE	d = d_0		L_t		t_{fix} | $t_{fix,red}$		h_1 | $h_{1,red}$		h_{nom} | $h_{nom,red}$		h_{ef} | $h_{ef,red}$		d_f		SW	T_{inst}		pcs
	[mm]	*[in]*	[mm]	*[in]*	[mm]	*[in]*	[mm]	*[in]*	[mm]	*[in]*	[mm]	*[in]*	[mm]	*[in]*	[mm]	[Nm]	*[ft.-lbf]*	
ABE895A4	**M8**	*0.32*	**95**	***3 3/4***	25	*0.98*	65	*2 9/16*	55	*2 3/16*	48	*1 7/8*	9	*0.35*	13	20	*14*	100
ABE8115A4	**M8**	*0.32*	**115**	***4 1/2***	45	*1.77*	65	*2 9/16*	55	*2 3/16*	48	*1 7/8*	9	*0.35*	13	20	*14*	100
ABE1095A4	**M10**	*0.40*	**95**	***3 3/4***	15 | 35	*0.59 | 1.38*	80 | 60	*3 1/8 | 2 3/8*	70 | 50	*2 3/4 | 1 15/16*	60 | 40	*2 3/8 | 1 9/16*	12	*0.47*	17	45	*33*	100
ABE10140A4	**M10**	*0.40*	**140**	***5 1/2***	60 | 80	*2.36 | 3.15*	80 | 60	*3 1/8 | 2 3/8*	70 | 50	*2 3/4 | 1 15/16*	60 | 40	*2 3/8 | 1 9/16*	12	*0.47*	17	45	*33*	50
ABE12110A4	**M12**	*0.48*	**110**	***4 3/8***	15	*0.59*	90	*3 1/2*	81	*3 3/16*	70	*2 3/4*	14	*0.55*	19	60	*44*	50
ABE16145A4	**M16**	*0.63*	**145**	***5 11/16***	30	*1.18*	110	*4 3/8*	98	*3 7/8*	80	*3 1/8*	18	*0.71*	24	80	*59*	25

GEOMETRY

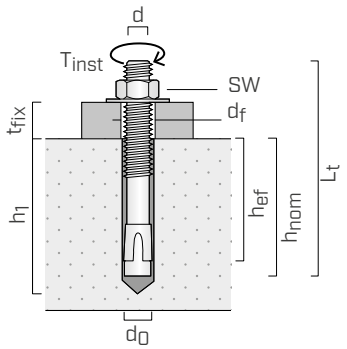

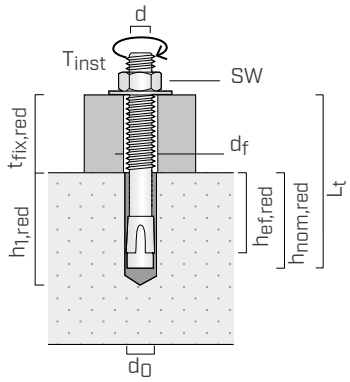

d	anchor diameter
d_0	hole diameter in the concrete support
L_t	anchor length
t_{fix}	maximum fastening thickness
h_1	minimum hole depth
h_{nom}	nominal anchoring depth
h_{ef}	effective anchoring depth
d_f	maximum hole diameter in the element to be fastened
SW	wrench size
T_{inst}	tightening torque

MOUNTING

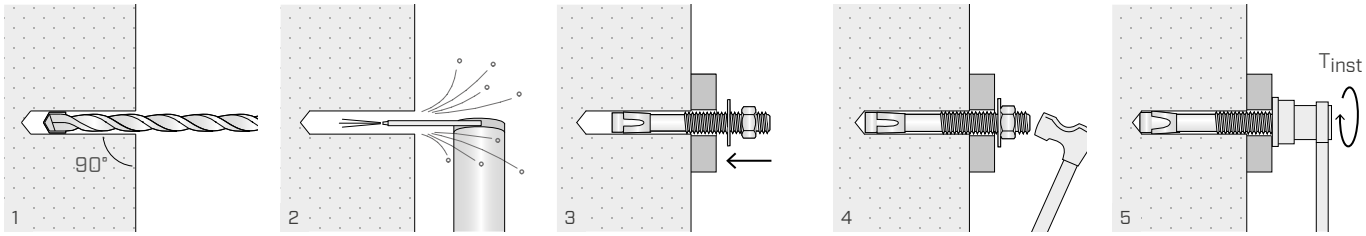

INSTALLATION

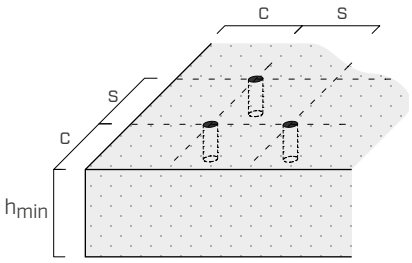

Spacing and minimum distances			M8	M10	M12	M16
Minimum spacing	s_{min}	[mm]	50	80	100	120
Minimum edge distance	c_{min}	[mm]	50	65	60	70
Minimum thickness of concrete support	h_{min}	[mm]	100	120	140	160
Spacing and critical distances			**M8**	**M10**	**M12**	**M16**
Critical spacing	$s_{cr,N}$ (1)	[mm]	144	3·hef	210	240
	$s_{cr,sp}$ (2)	[mm]	192	240	280	320
Critical edge distance	$c_{cr,N}$ (1)	[mm]	72	1,5·hef	105	120
	$c_{cr,sp}$ (2)	[mm]	96	120	140	160

For spacing and distances smaller than the critical ones, strength values have to be reduced depending on the installation parameters.
For h_{ef} values see table of codes and dimensions.

STRUCTURAL VALUES

Valid for a single anchor in thickened C20/25 grade concrete with a thin reinforcing layer when spacing and edge-distance are not limiting parameters.

CHARACTERISTIC VALUES

	UNCRACKED CONCRETE				CRACKED CONCRETE			
rod	tension (3)		shear (4)		tension (3)		shear	
	$N_{Rk,p}$ [kN]	γ_{Mp}	$V_{Rk,s}$ [kN]	γ_{Ms}	$N_{Rk,p}$ [kN]	γ_{Mp}	$V_{Rk,s}$ [kN]	γ_{M}
M8	12	1,5	9,2	1,33	4	1,5	9,2	1,33
M10*	7,5 | 20		11,4 | 14,5		4,5 | 9		11,4 | 14,5	
M12	24		21,1		16		21,1	
M16	26		39,3		20		39,3	

*The values refer to the installation of the dowel with the insertion depth value of: h_{nom}=50mm | $h_{nom=70mm}$ respectively.

Ψ_c incremental factor for $N_{Rk,p}$ (5) uncracked concrete			
	C30/37	C40/50	C50/60
M8	1,11	1,20	1,27
M10*	1,18 | 1,16	1,34 | 1,29	1,47 | 1,40
M12	1,21	1,39	1,54
M16	1,22	1,41	1,58

Ψ_c incremental factor for $N_{Rk,p}$ (5) cracked concrete			
	C30/37	C40/50	C50/60
M8	1,22	1,41	1,58
M10*	1,22 | 1,22	1,41 | 1,41	1,58 | 1,58
M12	1,22	1,40	1,57
M16	1,20	1,37	1,51

*The values refer to the installation of the dowel with the insertion depth value of: h_{nom}=50mm | $h_{nom=70mm}$ respectively.

NOTES

(1) Breakage characteristics for formation of concrete cone for tensile loads.
(2) Splitting failure mode for tensile loads.
(3) Pull-out failure mode.
(4) Steel failure mode.
(5) Tensile-strength increment factor (excluding steel failure).

GENERAL PRINCIPLES

- Characteristic values according to ETA-20/0295.
- The design values are obtained from the characteristic values as follows: $R_d = R_k/\gamma_M$.
  Coefficients γ_M are listed in the table in accordance with the failure characteristics and product certificates.
- For the calculation of anchors with reduced spacing, or too close to the edge, please refer to ETA. Similarly, in case of fastening on concrete-supports with a better-grade, limited thickness or a thick reinforcing layer please see ETA.
- For the design of anchors subjected to seismic loading refer to ETA and to EN 1992-4:2018.
- For the calculation of anchors subjected to fire refer to the ETA and the Technical Report 020.

AB1

HEAVY DUTY EXPANSION ANCHOR CE1



- CE option 1 for cracked and uncracked concrete
- Seismic performance category C1 (M10-M16) and C2 (M12-M16)
- Fire resistance R120
- Complete with nut and washer
- Suitable for dense materials
- Through fastening
- Torque-controlled expansion

USA, Canada and more design values available online.

SERVICE CLASS	SC1 SC2	MATERIAL	Zn ELECTRO PLATED — electrogalvanized carbon steel
ATMOSPHERIC CORROSIVITY	C1 C2		

CODES AND DIMENSIONS

CODE	d = d_0		L_t		t_{fix} | $t_{fix,red}$		h_1 | $h_{1,red}$		h_{nom} | $h_{nom,red}$		h_{ef} | $h_{ef,red}$		d_f		SW	T_{inst}		pcs
	[mm]	[in]	[mm]	[in]	[mm]	[in]	[mm]	[in]	[mm]	[in]	[mm]	[in]	[mm]	[in]	[mm]	[Nm]	[ft.-lbf]	
AB110115	M10	0.4	115	4 1/2	35	1.38	75	2.95	68	2.68	60	2.36	12	0.47	17	40	29	25
AB110135	M10	0.4	135	5 5/16	55	2.17	75	2.95	68	2.68	60	2.36	12	0.47	17	40	29	25
AB112100	M12	0.48	100	4	4	0.16	85	3.35	80	3.15	70	2.76	14	0.55	19	60	44	25
AB112120	M12	0.48	120	4 3/4	24	0.94	85	3.35	80	3.15	70	2.76	14	0.55	19	60	44	25
AB112150	M12	0.48	150	6	54	2.13	85	3.35	80	3.15	70	2.76	14	0.55	19	60	44	25
AB112180	M12	0.48	180	7 1/8	84	3.31	85	3.35	80	3.15	70	2.76	14	0.55	19	60	44	25
AB116145	M16	0.63	145	5 11/16	25 | 45	0.98|1.77	110 | 90	4.33|3.54	97 | 77	3.82|3.03	85 | 65	3.35|2.56	18	0.71	24	90	66	10

GEOMETRY

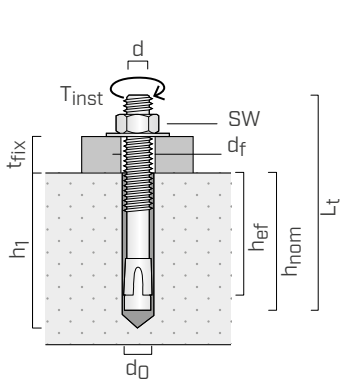

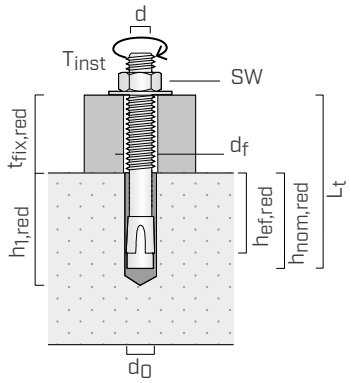

d	anchor diameter
d_0	hole diameter in the concrete support
L_t	anchor length
t_{fix}	maximum fastening thickness
h_1	minimum hole depth
h_{nom}	nominal anchoring depth
h_{ef}	effective anchoring depth
d_f	maximum hole diameter in the element to be fastened
SW	wrench size
T_{inst}	tightening torque

MOUNTING

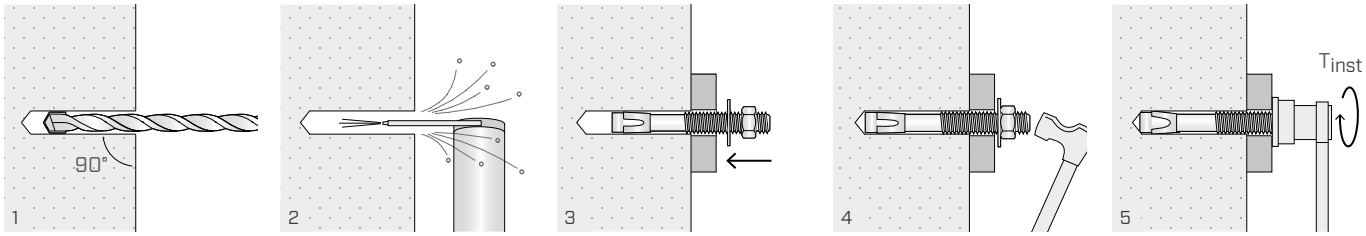

INSTALLATION

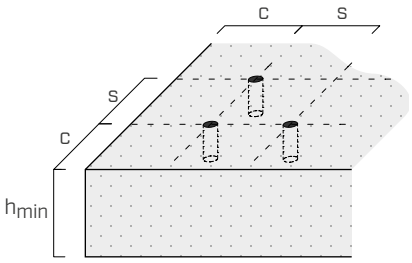

Spacing and minimum distances			M10	M12	M16(*)
Minimum spacing	s_{min}	[mm]	60	70	80
Minimum edge distance	c_{min}	[mm]	60	70	90
Minimum thickness of concrete support	h_{min}	[mm]	120	140	140
Spacing and critical distances			**M10**	**M12**	**M16(*)**
Critical spacing	$s_{cr,N}$(1)	[mm]	180	210	255
	$s_{cr,sp}$(2)	[mm]	300	350	$2 \cdot c_{cr,sp}$
Critical edge distance	$c_{cr,N}$(1)	[mm]	90	105	127,5
	$c_{cr,sp}$(2)	[mm]	150	175	$2,5 \cdot h_{ef}$

For spacing and distances smaller than the critical ones, strength values have to be reduced depending on the installation parameters.

*Values refer to installation of the M16 anchor in non-cracked concrete with insertion depth $h_{nom=}$97 mm

STRUCTURAL VALUES

Valid for a single anchor in thickened C20/25 grade concrete with a thin reinforcing layer when spacing and edge-distance are not limiting parameters.

CHARACTERISTIC VALUES

	UNCRACKED CONCRETE				CRACKED CONCRETE			
rod	**tension(3)**		**shear(4)**		**tension(3)**		**shear(4)**	
	$N_{Rk,p}$ [kN]	γ_{Mp}	$V_{Rk,s}$ [kN]	γ_{Ms}	$N_{Rk,p}$ [kN]	γ_{Mp}	V_{Rk} [kN]	γ_{Ms}
M10	16		17,4		9		17,4	
M12	25	1,5	25,3	1,25	16	1,5	25,3	1,25
M16*	35		55		25		55	

*The characteristic values refer to the installation of the dowel with the h_{nom}= 97 mm.

incremental factor for $N_{Rk,p}$(5)			
Ψ_c	M10-M12	C30/37	1,16
		C40/50	1,31
		C50/60	1,41
	M16	C30/37	1,22
		C40/50	1,41
		C50/60	1,58

NOTES

(1) Breakage characteristics for formation of concrete cone for tensile loads.
(2) Splitting failure mode for tensile loads.
(3) Pull-out failure mode.
(4) Steel failure mode.
(5) Tensile-strength increment factor (excluding steel failure).

GENERAL PRINCIPLES

- The characteristic values for diameters M10 and M12 are calculated according to ETA-17/0481, for diameter M16 the values are calculated according to ETA-99/0010.
- The design values are obtained from the characteristic values as follows: $R_d = R_k/\gamma_M$.
  Coefficients γ_M are listed in the table in accordance with the failure characteristics and product certificates.
- For the calculation of anchors with reduced spacing, or too close to the edge, please refer to ETA. Similarly, in case of fastening on concrete-supports with a better-grade, limited thickness or a thick reinforcing layer please see ETA.
- For the design of anchors subjected to seismic loading refer to ETA and to EN 1992-4:2018.
- For the calculation of anchors subjected to fire refer to the ETA and the Technical Report 020.

NDC

EXTRA-LONG NYLON ANCHOR CE WITH SCREW



- Certified use for cracked and uncracked concrete, solid and hollow brick masonry (category of use a, b, c)
- R90 fire resistance for Ø10 mm
- Plastic anchor for use in concrete and masonry, in non-structural applications
- Complete with zinc plated steel screw with countersunk head
- Through fastening

USA, Canada and more design values available online.

SERVICE CLASS	SC1 SC2	
ATMOSPHERIC CORROSIVITY	C1 C2	
MATERIAL	Zn ELECTRO PLATED electrogalvanized carbon steel	PA polyamide/nylon

CODES AND DIMENSIONS

CODE	d_0	L_t		d_v x L_v		t_{fix}		h_1		h_{ef}		d_f		bit	pcs
	[mm] *[in]*	[mm]	*[in]*	[mm]	*[in]*	[mm]	*[in]*	[mm]	*[in]*	[mm]	*[in]*	[mm]	*[in]*		
NDC880	**8** *0.32*	**80**	***3 1/8***	5.5 x 85	*0.22 x 3 3/8*	10	*0.39*	80	*3 1/8*	70	*2 3/4*	8,5	*0.33*	TX30	50
NDC8100		**100**	***4***	5.5 x 105	*0.22 x 4 1/8*	30	*1.18*	80	*3 1/8*	70	*2 3/4*	8,5	*0.33*	TX30	50
NDC8120		**120**	***4 3/4***	5.5 x 125	*0.22 x 4 15/16*	50	*1.97*	80	*3 1/8*	70	*2 3/4*	8,5	*0.33*	TX30	50
NDC8140		**140**	***5 1/2***	5.5 x 145	*0.22 x 5 11/16*	70	*2.76*	80	*3 1/8*	70	*2 3/4*	8,5	*0.33*	TX30	50
NDC10100	**10** *0.40*	**100**	***4***	7 x 105	*0.28 x 4 1/8*	30	*1.18*	80	*3 1/8*	70	*2 3/4*	10,5	*0.41*	TX40	50
NDC10120		**120**	***4 3/4***	7 x 125	*0.28 x 4 15/16*	50	*1.97*	80	*3 1/8*	70	*2 3/4*	10,5	*0.41*	TX40	50
NDC10140		**140**	***5 1/2***	7 x 145	*0.28 x 5 11/16*	70	*2.76*	80	*3 1/8*	70	*2 3/4*	10,5	*0.41*	TX40	25
NDC10160		**160**	***6 1/4***	7 x 165	*0.28 x 6 1/2*	90	*3.54*	80	*3 1/8*	70	*2 3/4*	10,5	*0.41*	TX40	25
NDC10200		**200**	***8***	7 x 205	*0.28 x 8 1/16*	130	*5.12*	80	*3 1/8*	70	*2 3/4*	10,5	*0.41*	TX40	25
NDC10240		**240**	***9 1/2***	7 x 245	*0.28 x 9 5/8*	170	*6.69*	80	*3 1/8*	70	*2 3/4*	10,5	*0.41*	TX40	20

GEOMETRY

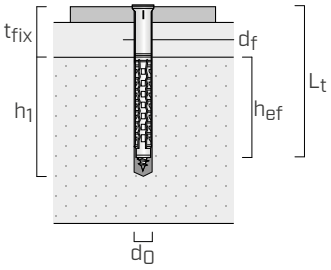

d_0	anchor diameter = hole diameter in the concrete support
L_t	anchor length
d_v x L_v	screw diameter x screw length
t_{fix}	maximum fastening thickness
h_1	minimum hole depth
h_{ef}	effective anchoring depth
d_f	maximum hole diameter in the element to be fastened

MOUNTING

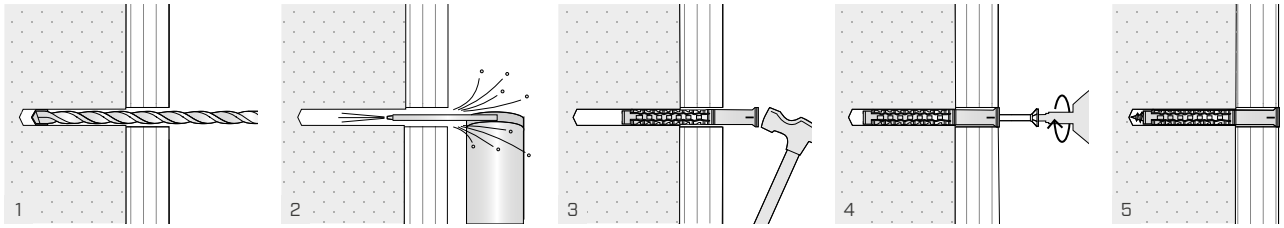

INSTALLATION

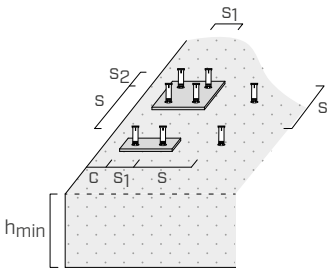

Spacing and minimum distances on concrete				NDC Ø8	NDC Ø10
Minimum spacing	concrete C12/15	s_{min}	[mm]	70	85
	concrete ≥ C16/20			50	60
Minimum edge distance	concrete C12/15	c_{min}	[mm]	70	70
	concrete ≥ C16/20			50	50
Critical edge distance	concrete C12/15	$c_{cr,N}$	[mm]	100	140
	concrete ≥ C16/20			70	100
Minimum thickness of concrete support		h_{min}	[mm]	100	100

For spacing and distances smaller than the critical ones, strength values have to be reduced depending on the installation parameters.

Spacing and distances on masonry				NDC Ø8 / Ø10
Minimum edge distance		c_{min}	[mm]	100
Minimum spacing for single anchor		s_{min}	[mm]	250
Minimum perpendicular spacing of the group of anchors to the free edge		$s_{1,min}$	[mm]	200
Minimum parallel spacing of a group of anchors to the free edge		$s_{2,min}$	[mm]	400
Minimum support thickness	solid brick EN 771-1	h_{min}	[mm]	115
	solid brick in calcareous sandstone EN 771-2			115
	brick with vertical holes EN 771-1 (e.g. Doppio Uni)			115
	hollow brick EN 771-1 (560 x 200 x 274 mm)			200
	calcareous sandstone hollow brick DIN106 / EN 771-2			240

STRUCTURAL VALUES ON CONCRETE[1]

Valid for a single anchor in thick grade concrete when spacing and edge-distance are not limiting parameters.

CHARACTERISTIC VALUES

	tension[2]			shear[3]	
	$N_{Rk,p}$ [kN]		γ_{Mc}	$V_{Rk,s}$ [kN]	γ_{Ms}
	C12/15	≥ C16/20			
Ø8	1,2	2,0	1,8	4,8	1,25
Ø10	2,0	3,0	1,8	6,4	1,5

NOTES

(1) For the anchor calculation in masonry applications, see ETA.
(2) Pull-out failure mode.
(3) Steel failure mode (screw).

GENERAL PRINCIPLES

- Characteristic values according to ETA-12/0261.
- The design values are obtained from the characteristic values as follows: $R_d = R_k/\gamma_M$.
  Coefficients γ_M are listed in the table and are in accordance with the product certificates.
- For the calculation of anchors with reduced spacing, or too close to the edge, please refer to ETA. Similarly, in case of fastening on concrete-supports with a better-grade or limited thickness please see ETA.

NDS

EXTRA-LONG ANCHOR WITH SCREW



- Plastic anchor for applications on semi-hollow and hollow brick
- Through fastening
- Complete with zinc plated steel screw with countersunk head
- Anti-rotational wings

CODES AND DIMENSIONS

CODE	d_0	L_t		d_v x L_v		t_{fix}		$h_{1,min}$		bit	pcs
	[mm] *[in]*	[mm]	*[in]*	[mm]	*[in]*	[mm]	*[in]*	[mm]	*[in]*		
NDS10100	**10** *0.40*	**100**	***4***	7 x 105	*0.28 x 4 1/8*	25	*0.98*	85	*3 3/8*	TX40	25
NDS10120		**120**	***4 3/4***	7 x 125	*0.28 x 4 15/16*	45	*1.77*	85	*3 3/8*	TX40	25
NDS10140		**140**	***5 1/2***	7 x 145	*0.28 x 5 11/16*	65	*2.56*	85	*3 3/8*	TX40	25
NDS10160		**160**	***6 1/4***	7 x 165	*0.28 x 6 1/2*	85	*3.35*	85	*3 3/8*	TX40	25
NDS10200		**200**	***8***	7 x 205	*0.28 x 8 1/16*	125	*4.92*	85	*3 3/8*	TX40	25

NDB

EXTRA-LONG ANCHOR WITH IMPACT SCREW



- Plastic anchor with countersunk collar
- Through fastening
- Complete with zinc plated steel impact-screw with countersunk head

CODES AND DIMENSIONS

CODE	d_0	L_t		d_v x L_v		t_{fix}		$h_{1,min}$		h_{ef}		d_k		bit	pcs
	[mm] *[in]*	[mm]	*[in]*	[mm]	*[in]*	[mm]	*[in]*	[mm]	*[in]*	[mm]	*[in]*	[mm]	*[in]*		
NDB640	**6** *0.24*	**40**	***1 9/16***	3.8 x 45	*0.15 x 1 3/4*	10	*0.39*	30	*1 3/16*	27	*1 1/16*	10,0	*0.39*	PZ 2	200
NDB655		**55**	***2 3/16***	3.8 x 60	*0.15 x 2 3/8*	25	*0.98*	30	*1 3/16*	27	*1 1/16*	10,0	*0.39*	PZ 2	100
NDB667		**67**	***2 5/8***	3.8 x 72	*0.15 x 2 13/16*	37	*1.46*	30	*1 3/16*	27	*1 1/16*	10,0	*0.39*	PZ 2	100
NDB860	**8** *0.32*	**60**	***2 3/8***	4.8 x 65	*0.15 x 2 9/16*	25	*0.98*	40	*1 9/16*	35	*1 3/8*	12,2	*0.48*	PZ 3	100
NDB875		**75**	***2 15/16***	4.8 x 80	*0.15 x 3 1/8*	40	*1.57*	40	*1 9/16*	35	*1 3/8*	12,2	*0.48*	PZ 3	100
NDB8100		**100**	***4***	4.8 x 105	*0.15 x 4 1/8*	65	*2.56*	40	*1 9/16*	35	*1 3/8*	12,2	*0.48*	PZ 3	50
NDB8120		**120**	***4 3/4***	4.8 x 125	*0.15 x 4 15/16*	85	*3.35*	40	*1 9/16*	35	*1 3/8*	12,2	*0.48*	PZ 3	50
NDB8135		**135**	***5 5/16***	4.8 x 140	*0.15 x 5 1/2*	100	*3.94*	40	*1 9/16*	35	*1 3/8*	12,2	*0.48*	PZ 3	50

GEOMETRY

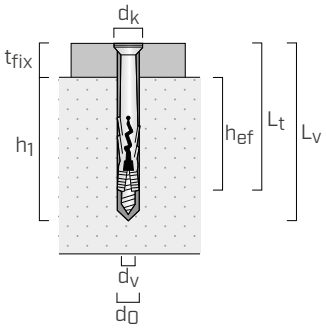

d_0	anchor diameter = hole diameter in the concrete support
L_t	anchor length
d_v x L_v	screw diameter x screw length
t_{fix}	maximum fastening thickness
h_1	minimum hole depth
h_{ef}	effective anchoring depth
d_k	head diameter

MOUNTING

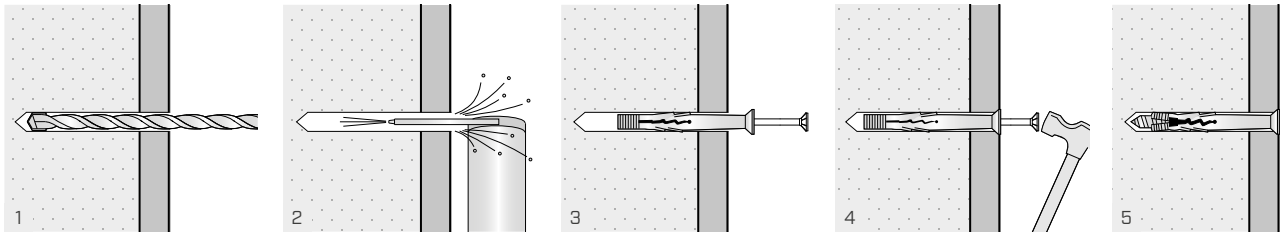

NDK

UNIVERSAL NYLON ANCHOR

CODES AND DIMENSIONS

UNIVERSAL - with collar

CODE	d_0		L_t		d_{screw}		pcs
	[mm]	*[in]*	[mm]	*[in]*	[mm]	*[in]*	
NDKU635	**6**	***0.24***	**35**	***1 3/8***	4 - 5	*0.16 - 0.2*	100
NDKU850	**8**	***0.32***	**50**	***1 15/16***	4.5 - 6	*0.18 - 0.24*	100
NDKU1060	**10**	***0.40***	**60**	***2 3/8***	6 - 8	*0.24 - 0.31*	50



GL - 4 sectors

CODE	d_0		L_t		d_{screw}		pcs
	[mm]	*[in]*	[mm]	*[in]*	[mm]	*[in]*	
NDKG840	**8**	***0.32***	**40**	***1 9/16***	4.5 - 6	*0.18 - 0.24*	100
NDKG1260	**12**	***0.48***	**60**	***2 3/8***	8 - 10	*0.31 - 0.39*	50
NDKG1470	**14**	***0.56***	**70**	***2 3/4***	10 - 12	*0.39 - 0.47*	25



NDL

UNIVERSAL PROLONGED NYLON ANCHOR

CODES AND DIMENSIONS

CODE	d_0	L_t		$d_{coach\ screw}$		pcs
	[mm] *[in]*	[mm]	*[in]*	[mm]	*[in]*	
NDL12160	**12** *0.48*	**160**	***6 1/4***	10	*0.39*	25
NDL12200		**200**	***8***	10	*0.39*	25
NDL12240		**240**	***9 1/2***	10	*0.39*	25
NDL14100	**14** *0.56*	**100**	***4***	12	*0.47*	50
NDL14130		**130**	***5 1/8***	12	*0.47*	50
NDL14160		**160**	***6 1/4***	12	*0.47*	25
NDL16140	**16** *0.63*	**140**	***5 1/2***	12	*0.47*	25
NDL16160		**160**	***6 1/4***	12	*0.47*	20
NDL16200		**200**	***8***	12	*0.47*	20
NDL16240		**240**	***9 1/2***	12	*0.47*	20



Ø12 - Ø14 Ø16

MBS | MBZ

SELF-TAPPING SCREW FOR MASONRY

- Electrogalvanized carbon steel
- Suitable for dense and semi-hollow materials
- Fastening of doors and windows
- The countersunk head (MBS) allows PVC window frames to be installed without damaging the frame
- The cylindrical head (MBZ) is able to penetrate and remain embedded in timber frames
- Strength values in different substrates tested in cooperation with the Institute for Window Technology (IFT) in Rosenheim
- The HI-LOW thread allows for safe fastening even near the edges of the support, thanks to the reduced tension induced on the material.
- Through fastening

USA, Canada and more design values available online.

SERVICE CLASS	SC1 SC2
MATERIAL	Zn ELECTRO PLATED electrogalvanized carbon steel



MBS



MBZ

CODES AND DIMENSIONS

MBS - countersunk screw

CODE	d_1 [mm] *[in]*	L [mm]	L *[in]*	pcs
MBS7552	**7,5** ***0.30*** **TX 30**	52	*2 1/16*	100
MBS7572		72	*2 13/16*	100
MBS7592		92	*3 5/8*	100
MBS75112		112	*4 7/16*	100
MBS75132		132	*5 3/16*	100
MBS75152		152	*6*	100
MBS75182		182	*7 3/16*	100
MBS75212		212	*8 3/8*	100
MBS75242		242	*9 1/2*	100

MBZ - cylindrical head

CODE	d_1 [mm] *[in]*	L [mm]	L *[in]*	pcs
MBZ7552	**7,5** ***0.30*** **TX 30**	52	*2 1/16*	100
MBZ7572		72	*2 13/16*	100
MBZ7592		92	*3 5/8*	100
MBZ75112		112	*4 7/16*	100
MBZ75132		132	*5 3/16*	100
MBZ75152		152	*6*	100
MBZ75182		182	*7 3/16*	100
MBZ75212		212	*8 3/8*	100
MBZ75242		242	*9 1/2*	100



FIELDS OF USE

Fastening of timber (MBZ) and PVC (MBS) window frames on the following supports:

- solid and perforated brick
- solid and perforated concrete
- light concrete
- autoclaved aerated concrete

GEOMETRY AND PARAMETERS OF INSTALLATION

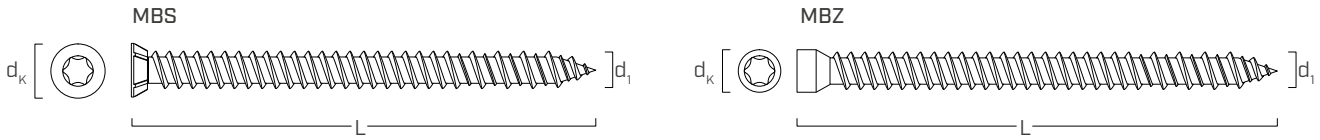

			MBS	MBZ
Nominal diameter	**d_1**	**[mm]**	**7,5**	**7,5**
Head diameter	d_k	[mm]	10,85	8,4
Diameter of pre-drilling hole concrete/brickwork	d_0	[mm]	6,0	6,0
Pre-drilling hole diameter in the timber element	d_V	[mm]	6,2	6,2
Hole diameter in the PVC element	d_F	[mm]	7,5	-

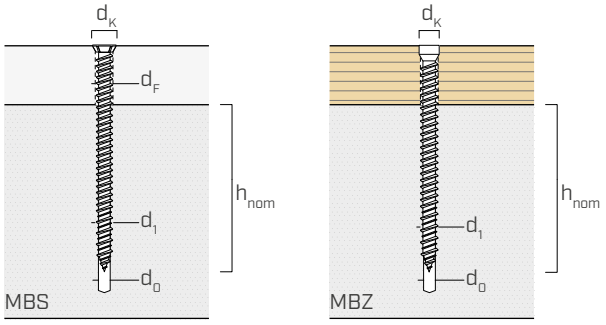

d_1 screw diameter
d_K head diameter
d_0 diameter of pre-drilling hole concrete/brickwork
d_V pre-drilling hole diameter in the timber element
d_F hole diameter in the PVC element
h_{nom} nominal anchoring depth

INSTALLATION

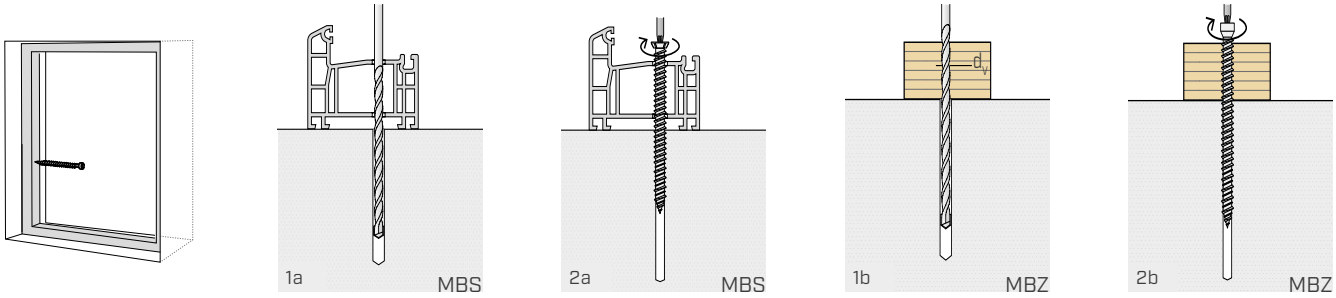

STRUCTURAL VALUES

WITHDRAWAL RESISTANCE

Type of support	**$h_{nom,min}$** [mm]	**N_{rec}**[(1)] [kN]
Concrete[(2)]	30	0,89
Solid brick	40	0,65
	80	1,18
Hollow brick	40	0,12
	60	0,24
Light concrete	80	0,17
Cellular concrete	80	0,11

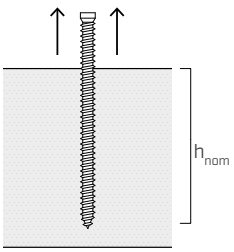

[(1)]The recommended withdrawal values are obtained considering a safety coefficient of 3.
[(2)]Concrete C20/25

CHEMICAL ANCHORS COMPARED

Rothoblaas offers a wide range of chemical anchors, custom-designed to meet different performance requirements. In fact, our range comprises three distinct families, each based on a unique main component: **vinylester** (VIN-FIX), urethane-methacrylate **hybrid** (HYB-FIX) and **epoxy** (EPO-FIX). Each family has significant differences, but the most important ones concern processing time, curing time and adhesion tension.

ADHESION TENSION

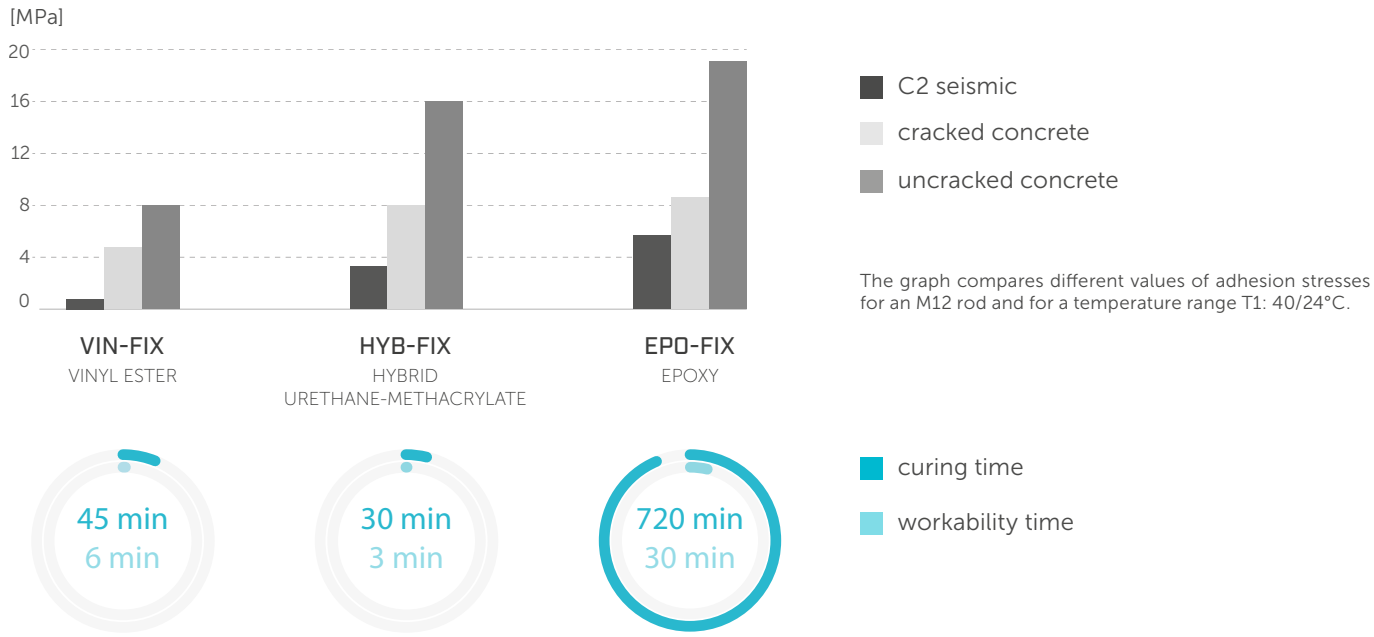

The graph compares different values of adhesion stresses for an M12 rod and for a temperature range T1: 40/24°C.

The above times refer to a substrate temperature of 20°C.

Choose between the maximum strength of the EPO-FIX epoxy anchor, the versatility and installation comfort of the VIN-FIX vinylester anchor or get the best of both worlds with the HYB-FIX hybrid anchor, which offers high performance and ease of use.

SEISMIC FOCUS

C1 AND C2 SEISMIC PERFORMANCE CATEGORY

According to EN 1992-4:2018, the seismic performance level required of anchors for structural use is a function of the seismicity level (a_g - S) of the building use class.
In Italy, the technical standards for construction (NTC 2018) require that seismic category C2 be met regardless of the building's use class.

FILL WASHER

The FILL washer is used to cancel the amplification effect of shear actions (hammering effect) that occurs during an earthquake in the presence of unfilled annular space. In the case of installation without filling the annular space, the **seismic strength** of the connection is **halved**.

$$N_{Rk,p\ without\ FILL} = \frac{N_{Rk,p\ with\ FILL}}{2}$$

This washer, thanks to the presence of a filler hole, allows the gap between the plate hole and the threaded rod to be filled after the connection has been tightened.

The correct use of the FILL washer therefore allows the full potential of the anchor to be exploited. Use of the nozzle tip reducer (STINGRED) required.

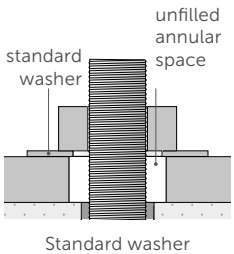

Standard washer

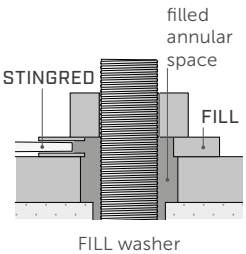

FILL washer



FILL
FILLING WASHER

page 564

VIN-FIX

VIDEO | MY PROJECT SOFTWARE | LEED tested | A+ | SEISMIC C2 | CE ETA-20/0363 ETA-21/0982

VINYL ESTER CHEMICAL ANCHOR WITHOUT STYRENE

- CE option 1 for cracked and uncracked concrete
- Certified use for post-installed threaded rods and reinforcing rods according to ETA-20/0363 Option 1
- C2 Seismic performance category (M12-M16)
- Comply with LEED® v4
- A+ Class: emission of volatile organic compounds (VOC) in living environments
- Certified for masonry use in solid and semi-hollow material (categories b, c, d)
- Dry, wet concrete or submerged holes
- Certified for use on aerated autoclaved concrete blocks (AAC)

USA, Canada and more design values available online.



CODES AND DIMENSIONS

CODE	format		pcs
	[ml]	*[US fl oz]*	
FIX300	300	*10.14*	12
FIX420	420	*14.20*	12

Expiry from date of manufacturing: 12 months for 300 ml, 18 months for 420 ml.
Storage temperature between +5 and +25° C.

ADDITIONAL PRODUCTS - ACCESSORIES

type	description	format	pcs
MAM400	gun for cartridge	420 ml	1
FLY	gun for cartridge	300 ml	1
STING	nozzle	-	12
STINGRED	nozzle tip reducer	-	1
FILL	filling washer	M8 - M24	-
BRUH	steel pipe cleaner	M8 - M30	-
BRUHAND	grip and extension for pipe cleaner	-	1
CAT	compressed air tool	-	1
PONY	blow pump	-	1

GEOMETRY

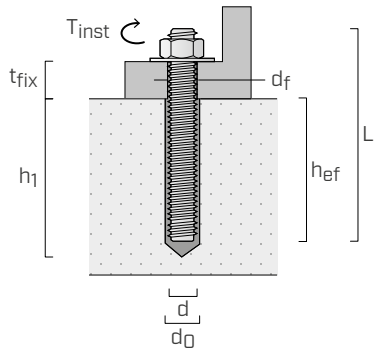

d	anchor diameter
d_0	hole diameter in the concrete support
h_{ef}	effective anchoring depth
d_f	hole diameter in the element to be fastened
T_{inst}	maximum tightening torque
L	anchor length
t_{fix}	maximum fastening thickness
h_1	minimum hole depth

MOUNTING

CONCRETE

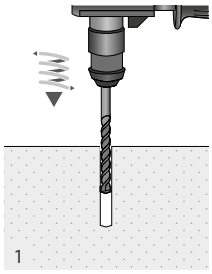

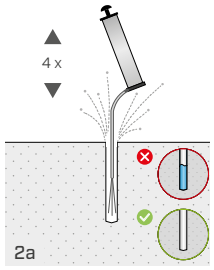

hole diameter ≤ 20 mm

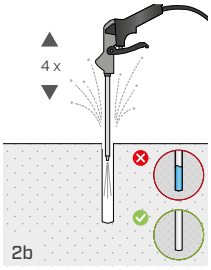

hole diameter > 20 mm or depth greater than 240 mm

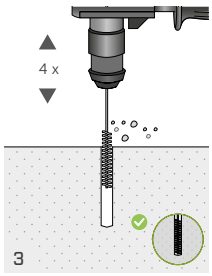

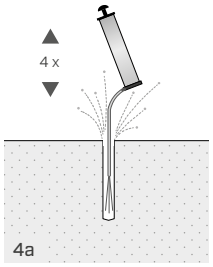

hole diameter ≤ 20 mm

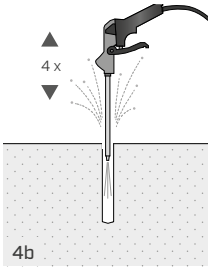

hole diameter > 20 mm or depth greater than 240 mm

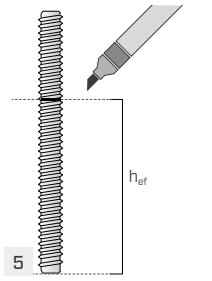

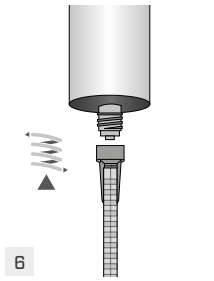

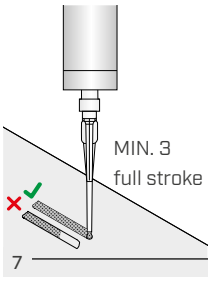

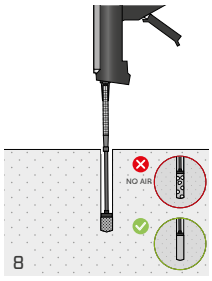

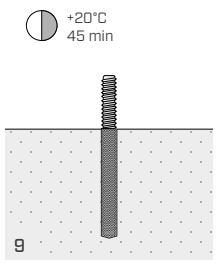

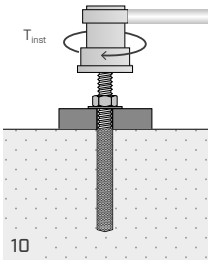

SOLID MASONRY

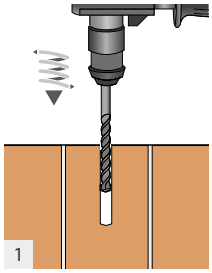

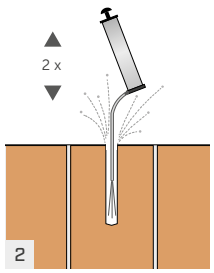

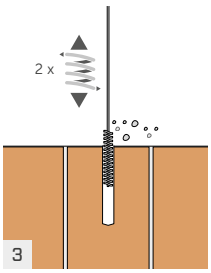

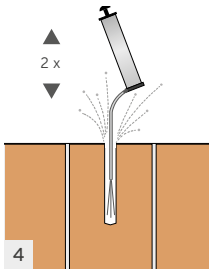

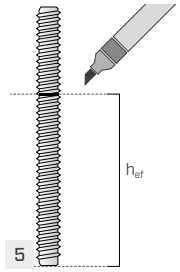

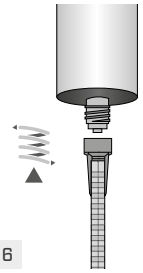

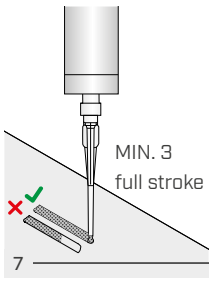

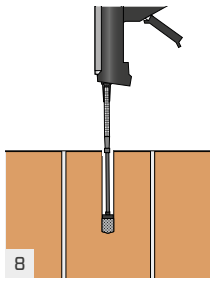

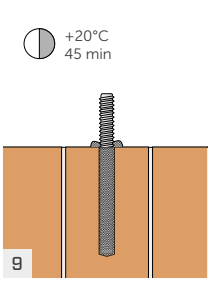

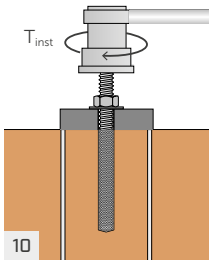

HOLLOW MASONRY

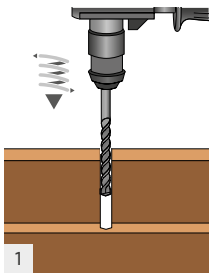

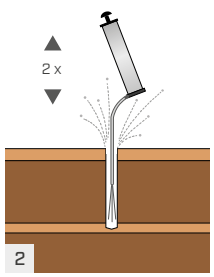

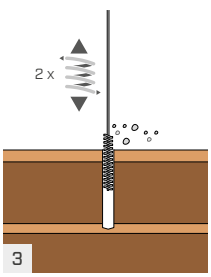

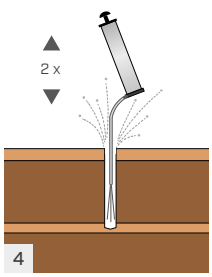

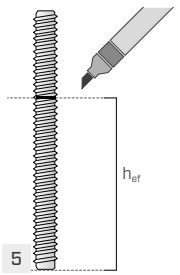

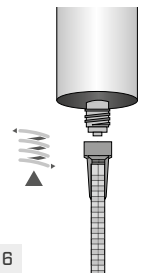

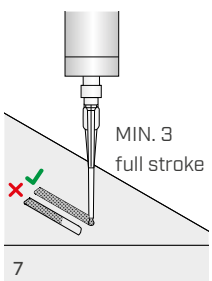

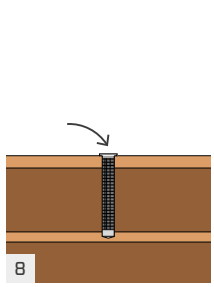

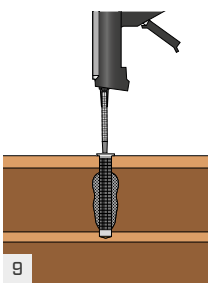

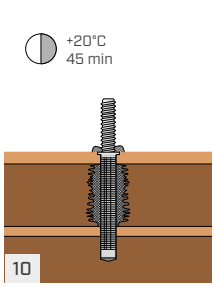

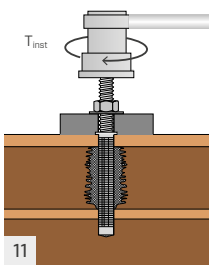

INSTALLATION

INSTALLATION GEOMETRY ON CONCRETE | THREADED RODS

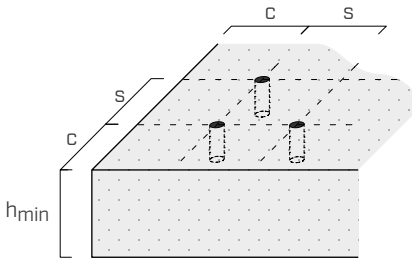



d	[mm]	M8	M10	M12	M16	M20	M24
d_0	[mm]	10	12	14	18	24	28
$h_{ef,min}$	[mm]	60	60	70	80	90	96
$h_{ef,max}$	[mm]	160	200	240	320	400	480
d_f	[mm]	9	12	14	18	22	26
T_{inst}	[Nm]	10	20	40	80	120	160

			M8	M10	M12	M16	M20	M24
Minimum spacing	s_{min}	[mm]	40	50	60	80	100	120
Minimum edge distance	c_{min}	[mm]	40	50	60	80	100	120
Minimum thickness of concrete support	h_{min}	[mm]	$h_{ef} + 30 \geq 100$ mm				$h_{ef} + 2\ d_0$	

For spacing and distances smaller than the critical ones, strength values have to be reduced depending on the installation parameters.

INSTALLATION TIME AND TEMPERATURE

support temperature	cartridge temperature	workability time	curing time before loading
-5 ÷ -1 °C (*)	+5 ÷ +40 °C	90 min	6 h
0 ÷ +4 °C		45 min	3 h
+5 ÷ +9 °C		25 min	2 h
+10 ÷ +14 °C		20 min	100 min
+15 ÷ +19 °C		15 min	80 min
+20 ÷ +29 °C		6 min	45 min
+30 ÷ +34 °C		4 min	25 min
+35 ÷ +39 °C		2 min	20 min

(*) Temperatures not permitted for masonry.

Component A classification: Eye Irrit. 2; Skin Sens. 1.

Component B classification: Eye Irrit. 2; Skin Sens. 1.

STRUCTURAL CHARACTERISTIC VALUES

Valid for a single threaded rod (INA or MGS) in very thick C20/25 grade concrete with a thin reinforcing layer when spacing and edge-distance are not limiting parameters.

UNCRACKED CONCRETE[1]

TENSION

rod	$h_{ef,standard}$	$N_{Rk,p}$[2] [kN]				$h_{ef,max}$	$N_{Rk,s}$[3] [kN]			
	[mm]	5.8 steel	γ_{Mp}	8.8 steel	γ_{Mp}	[mm]	5.8 steel	γ_{Ms}	8.8 steel	γ_{Ms}
M8	**80**	17,1	1,8	17,1	1,8	**160**	18	1,5	29	1,5
M10	**90**	22,6		22,6		**200**	29		46	
M12	**110**	33,2		33,2		**240**	42		67	
M16	**128**	51,5		51,5		**320**	79		126	
M20	**170**	85,5		85,5		**400**	123		196	
M24	**210**	126,7		126,7		**480**	177		282	

SHEAR

rod	h_{ef}	$V_{Rk,s}$[3] [kN]			
	[mm]	5.8 steel	γ_{Ms}	8.8 steel	γ_{Ms}
M8	**≥ 60**	11	1,25	15	1,25
M10	**≥ 60**	17		23	
M12	**≥ 70**	25		34	
M16	**≥ 80**	47		63	
M20	**≥ 100**	74		98	
M24	**≥ 125**	106		141	

incremental factor for $N_{Rk,p}$[4]		
Ψ_c	C25/30	1,04
	C30/37	1,08
	C40/50	1,15
	C50/60	1,19

CRACKED CONCRETE[1]

TENSION

rod	$h_{ef,standard}$	$N_{Rk,p}$[2] [kN]				$h_{ef,max}$	$N_{Rk,p}$ | $N_{Rk,s}$ [kN]			
	[mm]	5.8 steel	γ_{Mp}	8.8 steel	γ_{Mp}	[mm]	5.8 steel	γ_{Ms}	8.8 steel	γ_{Ms}
M8	**80**	9,0	1,8	9,0	1,8	**160**	18,0	1,5[3]	18,1	1,8[2]
M10	**90**	12,7		12,7		**200**	28,3	1,8[2]	28,3	
M12	**110**	18,7		18,7		**240**	40,7		40,7	
M16	**128**	29,0		29,0		**320**	72,4		72,4	

SHEAR

rod	$h_{ef,standard}$	V_{Rk} [kN]			
	[mm]	5.8 steel	γ_{Ms}	8.8 steel	γ_M
M8	**80**	11	1,25[3]	15	1,25[3]
M10	**90**	17		23	
M12	**110**	25		34	
M16	**128**	47		58	1,8[5]

incremental factor for $N_{Rk,p}$[6]		
Ψ_c	C25/30	1,02
	C30/37	1,04
	C40/50	1,07
	C50/60	1,09

NOTES

(1) For the calculation of anchors in masonry or in case of high bond rods, please see ETA document.

(2) Pull-out and concrete cone failure.

(3) Steel failure mode.

(4) Tensile-strength increment factor (excluding steel failure) for uncracked concrete.

(5) Pry-out failure mode.

(6) Tensile-strength increment factor (excluding steel failure) for uncracked concrete.

UK CONSTRUCTION PRODUCT EVALUATION

- UKTA-0836-23/6844.

GENERAL PRINCIPLES

- The characteristic values are according to EN 1992-4:2018 with a factor α_{sus}=0,6 and in accordance with ETA-20/0363.
- The design values are obtained from the characteristic values as follows: $R_d = R_k/\gamma_M$. Coefficients γ_M are listed in the table in accordance with the failure characteristics and product certificates.
- For the calculation of anchors with reduced spacing, or too close to the edge, please refer to ETA. Similarly, in case of fastening on concrete-supports with a better-grade, limited thickness or a thick reinforcing layer please see ETA.
- For the design of anchors subjected to seismic loading refer to ETA and to EN 1992-4:2018.
- For specifications of the diameters covered by the various certifications (cracked concrete, uncracked concrete, seismic applications), please refer to ETA.

VIN-FIX PRO NORDIC

VINYL ESTER CHEMICAL ANCHOR FOR LOW TEMPERATURES

- CE option 1 for cracked and uncracked concrete
- Certified for use in masonry (category c, w/d)
- C1 Seismic performance category (M12-M24)
- Maintains workability at low temperatures - 10 °C
- Comply with LEED ®, IEQ Credit 4.1
- Dry or wet concrete
- Concrete with submerged holes
- No stress in the support
- Without styrene

USA, Canada and more design values available online.



CODES AND DIMENSIONS

CODE	format		pcs
	[ml]	*[US fl oz]*	
VIN410N	410	*13.86*	12

Expiry from date of manufacturing: 18 months.
Storage temperature between 0 and +25° C.

ADDITIONAL PRODUCTS - ACCESSORIES

type	description	format	pcs
MAM400	gun for cartridge	410 ml	1
STING	nozzle	-	12
PONY	blow pump	-	1

GEOMETRY

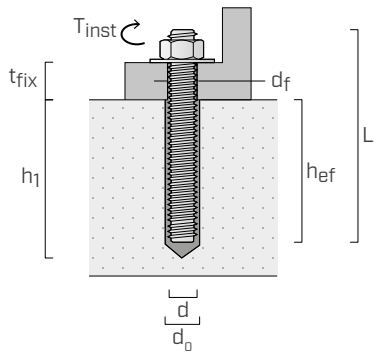

d	anchor diameter
d_0	hole diameter in the concrete support
h_{ef}	effective anchoring depth
d_f	maximum hole diameter in the element to be fastened
T_{inst}	tightening torque
L	anchor length
t_{fix}	maximum fastening thickness
h_1	minimum hole depth

MOUNTING

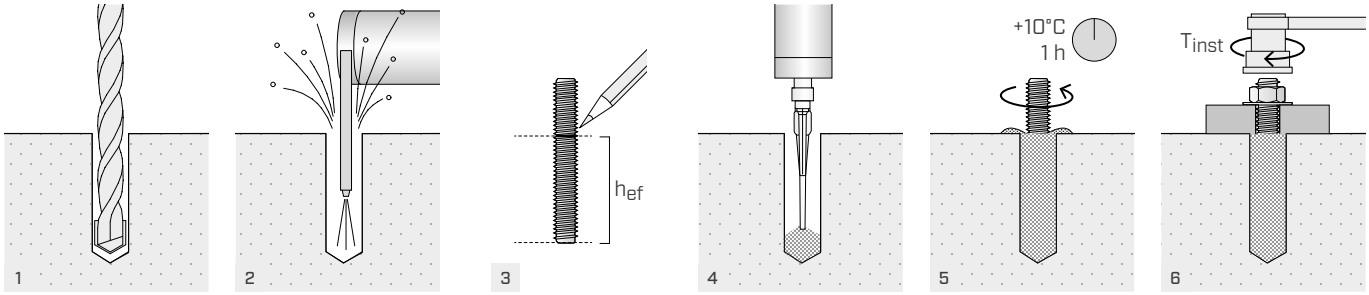

INSTALLATION

INSTALLATION GEOMETRY ON CONCRETE | THREADED RODS (TYPE INA or MGS)

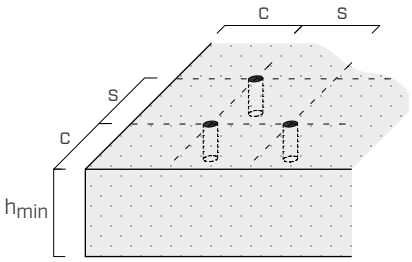



d	[mm]	M8	M10	M12	M16	M20	M24	M27	M30
d_0	[mm]	10	12	14	18	22	26	30	35
$h_{ef,min}$	[mm]	64	80	96	128	160	192	216	240
$h_{ef,max}$	[mm]	160	200	240	320	400	480	540	600
d_f	[mm]	9	12	14	18	22	26	30	33
T_{inst}	[Nm]	10	20	40	80	150	200	240	275

			M8	M10	M12	M16	M20	M24	M27	M30
Minimum spacing	s_{min}	[mm]	h_{ef} / 2							
Minimum edge distance	c_{min}	[mm]	h_{ef} / 2							
Minimum thickness of concrete support	h_{min}	[mm]	h_{ef} + 30 ≥ 100 mm				h_{ef} + 2 d_0			

For spacing and distances smaller than the critical ones, strength values have to be reduced depending on the installation parameters.

INSTALLATION TIME AND TEMPERATURE

support temperature	cartridge temperature	workability time	curing time before loading	
			dry support	wet support
-20 ÷ -11 °C*	0 ÷ +20 °C	45 min *	35 h *	70 h *
-10 ÷ -6 °C		35 min	12 h	24 h
-5 ÷ -1 °C		15 min	5 h	10 h
0 ÷ +4 °C		10 min	2,5 h	5 h
+5 ÷ +9 °C		6 min	80 min	160 min
+10 °C		6 min	60 min	120 min

*Use not included in certification.

STRUCTURAL CHARACTERISTIC VALUES

Valid for a single threaded rod (INA or MGS) in very thick C20/25 grade concrete with a thin reinforcing layer when spacing and edge-distance are not limiting parameters.

UNCRACKED CONCRETE[1]

TENSION

rod	$h_{ef,standard}$	$N_{Rk,p}$[2] [kN]			
	[mm]	5.8 steel	γ_{Mp}	8.8 steel	γ_{Mp}
M8	**80**	17,1	1,8	17,1	1,8
M10	**90**	28,3		28,3	
M12	**110**	39,4		39,4	
M16	**128**	57,9		57,9	
M20	**170**	90,8		90,8	
M24	**210**	126,7		126,7	
M27	**240**	132,3	2,1	132,3	2,1
M30	**270**	140,0		140,0	

SHEAR

rod	h_{ef}	$V_{Rk,s}$[3] [kN]			
	[mm]	5.8 steel	γ_{Ms}	8.8 steel	γ_{Ms}
M8	**≥ 64**	9,0	1,25	15,0	1,25
M10	**≥ 80**	15,0		23,0	
M12	**≥ 96**	21,0		34,0	
M16	**≥ 128**	39,0		63,0	
M20	**≥ 160**	61,0		98,0	
M24	**≥ 192**	88,0		141,0	
M27	**≥ 216**	115,0		184,0	
M30	**≥ 240**	140,0		224,0	

CRACKED CONCRETE[1]

TENSION

rod	$h_{ef,standard}$	$N_{Rk,p}$[2] [kN]			
	[mm]	5.8 steel	γ_{Mp}	8.8 steel	γ_{Mp}
M12	**110**	18,7	1,8	18,7	1,8
M16	**128**	29,0		29,0	
M20	**170**	48,1		48,1	
M24	**210**	71,3		71,3	

SHEAR

rod	$h_{ef,standard}$	V_{Rk} [kN]			
	[mm]	5.8 steel	γ_{Ms}	8.8 steel	γ_{Mc}
M12	**110**	21,0	1,25 [3]	37,3	1,5 [5]
M16	**128**	39,0		57,9	
M20	**170**	61,0		96,1	
M24	**210**	88,0		142,5	

incremental factor for $N_{Rk,p}$[4]		
Ψ_c	C25/30	1,02
	C30/37	1,04
	C40/50	1,08
	C50/60	1,10

NOTES

(1) For the calculation of anchors in masonry or in case of high bond rods, please see ETA document.

(2) Pull-out and concrete cone failure.

(3) Steel failure mode.

(4) Tensile-strength increment factor (excluding steel failure) for both cracked and uncracked concrete.

(5) Pry-out failure mode.

Component A classification: Flam. Liq. 3; Eye Irrit. 2; Skin Sens. 1; Aquatic Chronic 3.

Component B classification: Eye Irrit. 2; Skin Sens. 1; Aquatic Acute 1; Aquatic Chronic 1.

GENERAL PRINCIPLES

- Characteristic values according to ETA-16/0600.
- The design values are obtained from the characteristic values as follows: $R_d = R_k/\gamma_M$. Coefficients γ_M are listed in the table in accordance with the failure characteristics and product certificates.
- For the calculation of anchors with reduced spacing, or too close to the edge, please refer to ETA. Similarly, in case of fastening on concrete-supports with a better-grade, limited thickness or a thick reinforcing layer please see ETA.
- For the design of anchors subjected to seismic loading refer to ETA and to EN 1992-4:2018.
- For specifications of the diameters covered by the various certifications (cracked concrete, uncracked concrete, seismic applications, masonry), please refer to ETA.

HYB-FIX

VIDEO | MY PROJECT SOFTWARE | LEED tested | A+ | F120 | SEISMIC C2 | CE ETA-20/1285

HIGH-PERFORMANCE HYBRID CHEMICAL ANCHOR

- Urethane-methacrylate based resin
- CE option 1 for cracked and uncracked concrete
- C2 Seismic performance category (M12-M24)
- Certified fire resistance F120
- Comply with LEED® v4.1 BETA
- A+ Class: emission of volatile organic compounds (VOC) in living environments
- Ideal for extra-heavy anchors and post-installed reinforcement rods
- Excellent long-term creep behaviour
- Dry or wet concrete
- Concrete with submerged holes
- Overhead application allowed
- Certified installation also with hollow drill bit



USA, Canada and more design values available online.

CODES AND DIMENSIONS

CODE	format		pcs
	[ml]	*[US fl oz]*	
HYB280	280	*9.47*	12
HYB420	420	*14.20*	12

Expiry from date of manufacturing: 18 months.
Storage temperature between +5 and +25° C.

ADDITIONAL PRODUCTS - ACCESSORIES

type	description	format	pcs
MAM400	gun for cartridge	420 ml	1
FLY	gun for cartridge	280 ml	1
STING	nozzle	-	12
STINGEXT	extension tube for nozzle	-	1
STINGRED	nozzle tip reducer	-	1
PLU	injection nozzle	M12 - M30	-
FILL	filling washer	M8 - M24	-
BRUH	steel pipe cleaner	M8 - M30	-
BRUHAND	grip and extension for pipe cleaner	-	1
IR (INTERNAL THREADED ROD)	bushing with internal metric thread	M8 - M16	-
PONY	blow pump	-	1
CAT	compressed air tool	-	1
HDE	hollow drill bit for concrete	M8 - M30	-
DUXHA	hollow drill bit for concrete	M16 - M30	-
DUISPS	class M suction system	-	1

INSTALLATION TIME AND TEMPERATURE

support temperature	workability time	curing time before loading	
		dry support	wet support
-5 ÷ -1 °C	50 min	5 h	10 h
0 ÷ +4 °C	25 min	3,5 h	7 h
+5 ÷ +9 °C	15 min	2 h	4 h
+10 ÷ +14 °C	10 min	1 h	2 h
+15 ÷ +19 °C	6 min	40 min	80 min
+20 ÷ +29 °C	3 min	30 min	60 min
+30 ÷ +40 °C	2 min	30 min	60 min

Cartridge storage temperature +5 - +40°.

MOUNTING

Hole execution: three different installation possibilities.

a. INSTALLATION WITH HOLLOW DRILL BIT (HDE)

b. ASSEMBLY WITH HP + BRUH (only valid in non-cracked concrete)

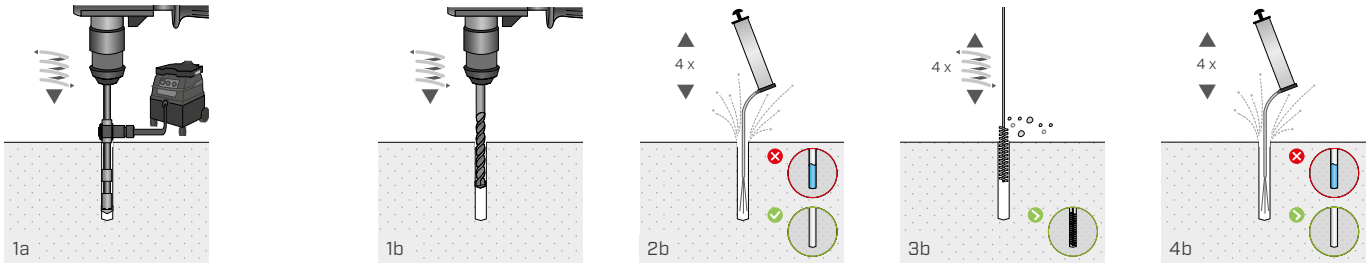

c. ASSEMBLY WITH CAT + BRUH

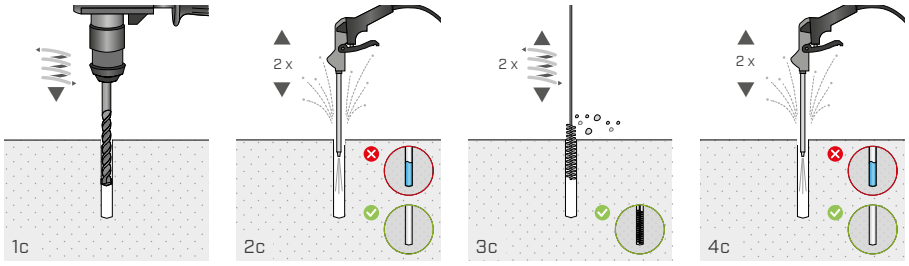

Rod installation:

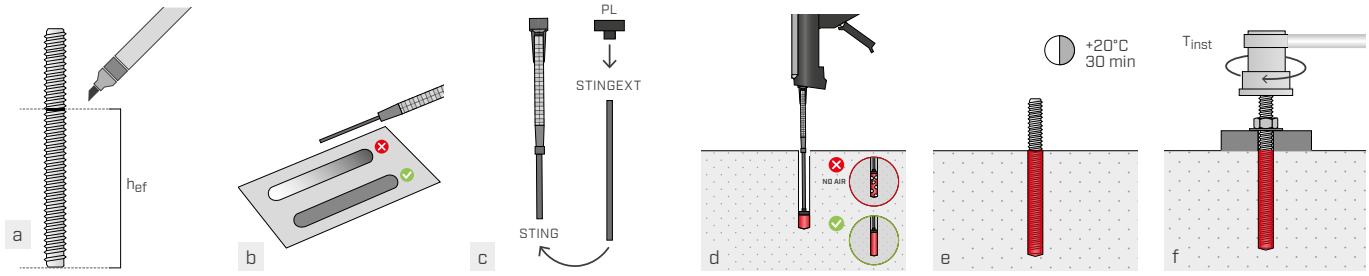

INSTALLATION

INSTALLATION GEOMETRY FEATURES ON CONCRETE

THREADED RODS (INA or MGS TYPE)

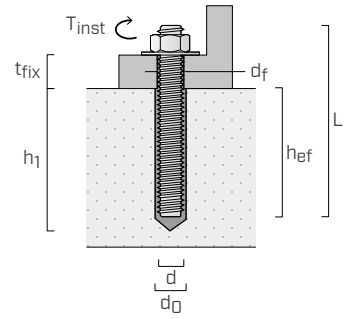

d	anchor diameter
d_0	hole diameter in the concrete support
h_{ef}	effective anchoring depth
d_f	hole diameter in the element to be fastened
T_{inst}	maximum tightening torque
L	anchor length
t_{fix}	maximum fastening thickness
h_1	minimum hole depth



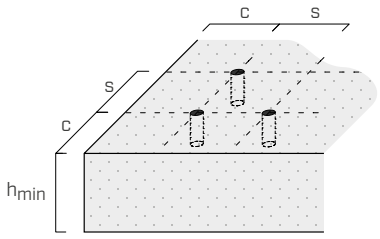

d	[mm]	M8	M10	M12	M16	M20	M24	M27	M30
d_0	[mm]	10	12	14	18	22	28	30	35
$h_{ef,min}$	[mm]	60	60	70	80	90	96	108	120
$h_{ef,max}$	[mm]	160	200	240	320	400	480	540	600
d_f	[mm]	9	12	14	18	22	26	30	33
T_{inst}	[Nm]	10	20	40	60	100	170	250	300

			M8	M10	M12	M16	M20	M24	M27	M30
Minimum spacing	s_{min}	[mm]	40	50	60	75	95	115	125	140
Minimum edge distance	c_{min}	[mm]	35	40	45	50	60	65	75	80
Minimum thickness of concrete support	h_{min}	[mm]	h_{ef} + 30 ≥ 100 mm			h_{ef} + 2 d_0				

For spacing and distances smaller than the critical ones, strength values have to be reduced depending on the installation parameters.

BUSHING WITH INTERNAL METRIC THREAD (IR TYPE)

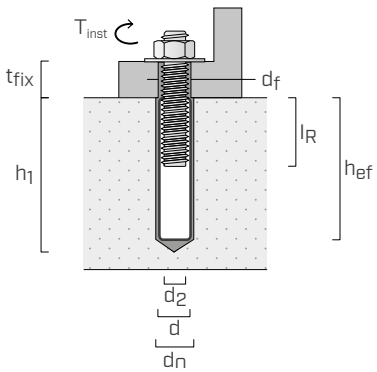

d_2	internal threaded rod diameter
d	diameter of the element anchored on concrete
d_0	hole diameter in the concrete support
h_{ef}	effective anchoring depth
d_f	hole diameter in the element to be fastened
T_{inst}	maximum tightening torque
t_{fix}	maximum fastening thickness
h_1	minimum hole depth
l_R	length of internal threaded rod



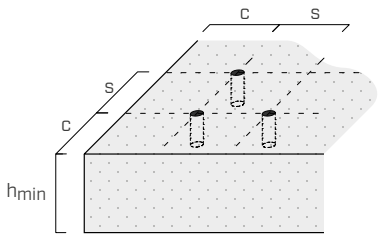

		IR-M8	IR-M10	IR-M12	IR-M16
d_2	[mm]	8	10	12	16
d	[mm]	12	16	20	24
d_0	[mm]	14	18	22	28
$h_{ef,min}$	[mm]	70	80	90	96
$h_{ef,max}$	[Nm]	240	320	400	480
d_f	[mm]	9	12	14	18
T_{inst}	[mm]	10	20	40	60
$l_{R,min}$	[mm]	8	10	12	16
$l_{R,max}$	[mm]	20	25	30	32

			IR-M8	IR-M10	IR-M12	IR-M16
Minimum spacing	s_{min}	[mm]	60	75	95	115
Minimum edge distance	c_{min}	[mm]	45	50	60	65
Minimum thickness of concrete support	h_{min}	[mm]	h_{ef} + 30 ≥ 100 mm	h_{ef} + 2 d_0		

For spacing and distances smaller than the critical ones, strength values have to be reduced depending on the installation parameters.

STRUCTURAL CHARACTERISTIC VALUES

Valid for a single threaded rod (INA or MGS) in very thick C20/25 grade concrete with a thin reinforcing layer when spacing and edge-distance are not limiting parameters.

UNCRACKED CONCRETE[1]

TENSION

rod	$h_{ef,standard}$	$N_{Rk,p}/N_{Rk,s}$ [kN]				h_{ef}	$N_{Rk,s}$[2] [kN]			
	[mm]	5.8 steel	γ_M	8.8 steel	γ_M	[mm]	5.8 steel	γ_{Ms}	8.8 steel	γ_{Ms}
M8	80	18,0	$\gamma_{Ms} = 1,5$[2]	29,0	$\gamma_{Ms} = 1,5$[2]	≥ 80	18,0	1,5	29,0	1,5
M10	90	29,0		42,0	$\gamma_{Mc} = 1,5$[4][5]	≥ 100	29,0		46,0	
M12	110	42,0		56,8		≥ 130	42,0		67,0	
M16	128	71,2	$\gamma_{Mc} = 1,5$[4][5]	71,2		≥ 180	78,0		125,0	
M20[3]	170	109,0		109,0		≥ 250	122,0		196,0	
M24[3]	210	149,7		149,7		≥ 325	176,0		282,0	
M27[3]	240	182,9		182,9		≥ 390	230,0		368,0	
M30[3]	270	218,2		218,2		≥ 440	280,0		449,0	

SHEAR

rod	h_{ef}	$V_{Rk,s}$[2] [kN]			
	[mm]	5.8 steel	γ_{Ms}	8.8 steel	γ_{Ms}
M8	≥ 60	11,0	1,25	15,0	1,25
M10	≥ 60	17,0		23,0	
M12	≥ 70	25,0		34,0	
M16	≥ 80	47,0		63,0	
M20[3]	≥ 100	74,0		98,0	
M24[3]	≥ 130	106,0		141,0	
M27[3]	≥ 155	138,0		184,0	
M30[3]	≥ 175	168,0		224,0	

CRACKED CONCRETE[1]

TENSION

rod	$h_{ef,standard}$	$N_{Rk,p}$ [kN]				$h_{ef,max}$	$N_{Rk,s}/N_{Rk,p}$ [kN]			
	[mm]	5.8 steel	γ_{Mp}	8.8 steel	γ_M	[mm]	5.8 steel	γ_M	8.8 steel	γ_M
M8	80	14,1	$\gamma_{Mp} = 1,5$[5][6]	14,1	$\gamma_{Mp} = 1,5$[5][6]	160	18,0	$\gamma_{Ms} = 1,5$[2]	28,2	$\gamma_{Mp} = 1,5$[5][6]
M10	90	21,2		21,2		200	29,0		46,0	$\gamma_{Ms} = 1,5$[2]
M12	110	33,2		33,2		240	42,0		67,0	
M16	128	49,9	$\gamma_{Mc} = 1,5$[4][5]	49,9	$\gamma_{Mc} = 1,5$[4][5]	320	78,0		125,0	
M20[3]	170	76,3		76,3		400	122,0		196,0	
M24[3]	210	104,8		104,8		480	176,0		253,3	$\gamma_{Mp} = 1,5$[5][6]
M27[3]	240	128,0		128,0		540	230,0		320,6	
M30[3]	270	152,8		152,8		600	280,0		395,8	

SHEAR

rod	$h_{ef,standard}$	$V_{Rk,s}$[2] [kN]			
	[mm]	5.8 steel	γ_{Ms}	8.8 steel	γ_{Ms}
M8	80	11,0	1,25	15,0	1,25
M10	90	17,0		23,0	
M12	110	25,0		34,0	
M16	128	47,0		63,0	
M20[3]	170	74,0		98,0	
M24[3]	210	106,0		141,0	
M27[3]	240	138,0		184,0	
M30[3]	270	168,0		224,0	

incremental factor for $N_{Rk,p}$[7]		
ψ_c	C25/30	1,02
	C30/37	1,04
	C40/50	1,08
	C50/60	1,10

NOTES

(1) Refer to the relevant ETA document for use of rebars.

(2) Steel failure mode.

(3) Installation is only allowed with CAT and HDE.

(4) Concrete cone failure method.

(5) Valid concrete material safety coefficient value using CAT in the installation. For different installation systems, use a coefficient of γ_M equal to 1,8.

(6) Pull-out and concrete cone failure.

(7) Tensile-strength increment factor (excluding steel and concrete cone failure) for both cracked and uncracked concrete.

GENERAL PRINCIPLES

- The characteristic values are according to EN 1992-4:2018 with a factor α_{sus}=0.6 and in accordance with ETA-20/1285.
- The design values are obtained from the characteristic values as follows: $R_d = R_k/\gamma_M$. Coefficients γ_M are listed in the table in accordance with the failure characteristics and product certificates.
- For the calculation of anchors with reduced spacing, or too close to the edge, please refer to ETA. Similarly, in case of fastening on concrete-supports with a better-grade, limited thickness or a thick reinforcing layer please see ETA.
- For the design of anchors subjected to seismic loading refer to ETA and to EN 1992-4:2018.
- For specifications of the diameters covered by the various certifications (cracked concrete, uncracked concrete, seismic applications), please refer to ETA.

Component A and Component B classification: Skin Sens. 1. May cause an allergic skin reaction.

STRUCTURAL CHARACTERISTIC VALUES

Valid for a single threaded rod (INA or MGS) when installed with IR in C20/25 grade concrete with a thin reinforcing layer, considering spacing, edge-distance, and base-concrete thickness as non-limiting parameters.

UNCRACKED CONCRETE[1]

TENSION

rod	h_{ef} [mm]	h_{min}[2] [mm]	$N_{Rk,s}/N_{Rk,p}$ [kN] 5.8 steel	γ_{Ms}	8.8 steel	γ_M
IR-M8	**80**	**110**	17,0	1,5[3]	27,0	γ_{Ms} = 1,5[3]
IR-M10	**80**	**116**	29,0		35,2	γ_{Mc} = 1,5[5][6]
IR-M12[4]	**125**	**169**	42,0		67,0	γ_{Ms} = 1,5[3]
IR-M16[4]	**170**	**226**	76,0		109,0	γ_{Mc} = 1,5[5][6]

SHEAR

rod	h_{ef} [mm]	h_{min}[2] [mm]	$V_{Rk,s}$[3] [kN] 5.8 steel	γ_{Ms}	8.8 steel	γ_{Ms}
IR-M8	**80**	**110**	9,0	1,25	14,0	1,25
IR-M10	**80**	**116**	15,0		23,0	
IR-M12[4]	**125**	**169**	21,0		34,0	
IR-M16[4]	**170**	**226**	38,0		60,0	

CRACKED CONCRETE[1]

TENSION

rod	h_{ef} [mm]	h_{min}[2] [mm]	$N_{Rk,s}/N_{Rk,p}$ [kN] 5.8 steel	γ_M	8.8 steel	γ_M	h_{ef} [mm]	$N_{Rk,s}$[3] [kN] 5.8 steel	γ_{Ms}	8.8 steel	γ_{Ms}
IR-M8	**80**	**110**	17,0	γ_{Ms} = 1,5[3]	19,6	γ_{Mc} = 1,5[6][7]	**≥ 120**	17,0	1,5	27,0	1,5
IR-M10	**80**	**116**	24,6	γ_{Mc} = 1,5[5][6]	24,6	γ_{Mc} = 1,5[5][6]	**≥ 150**	29,0		46,0	
IR-M12[4]	**125**	**169**	42,0	γ_{Ms} = 1,5[3]	48,1		**≥ 180**	42,0		67,0	
IR-M16[4]	**170**	**226**	76,0		76,3		**≥ 250**	76,0		121,0	

SHEAR

rod	h_{ef} [mm]	h_{min}[2] [mm]	$V_{Rk,s}$[3] [kN] 5.8 steel	γ_{Ms}	8.8 steel	γ_{Ms}
IR-M8	**80**	**110**	9,0	1,25	14,0	1,25
IR-M10	**80**	**116**	15,0		23,0	
IR-M12[4]	**125**	**169**	21,0		34,0	
IR-M16[4]	**170**	**226**	38,0		60,0	

incremental factor for $N_{Rk,p}$[8]		
Ψ_c	C25/30	1,02
	C30/37	1,04
	C40/50	1,08
	C50/60	1,10

NOTES

(1) Refer to the relevant ETA document for use of rebars.
(2) Minimum thickness of concrete support.
(3) Steel failure mode.
(4) Installation is only allowed with CAC and HDE.
(5) Concrete cone failure method.
(6) Valid concrete material safety coefficient value using CAT in the installation. For different installation systems, use a coefficient of γ_M equal to 1,8.
(7) Pull-out and concrete cone failure.
(8) Tensile-strength increment factor (excluding steel failure) for both cracked and uncracked concrete.

GENERAL PRINCIPLES

- The characteristic values are according to EN 1992-4:2018 with a factor α_{sus}=0.6 and in accordance with ETA-20/1285.
- The design values are obtained from the characteristic values as follows: $R_d = R_k/\gamma_M$. Coefficients γ_M are listed in the table in accordance with the failure characteristics and product certificates.
- For the calculation of anchors with reduced spacing, or too close to the edge, please refer to ETA. Similarly, in case of fastening on concrete-supports with a better-grade, limited thickness or a thick reinforcing layer please see ETA.
- For the design of anchors subjected to seismic loading refer to ETA and to EN 1992-4:2018.
- For specifications of the diameters covered by the various certifications (cracked concrete, uncracked concrete, seismic applications), please refer to ETA.

Component A and Component B classification: Skin Sens. 1. May cause an allergic skin reaction.

EPO-FIX

VIDEO | MY PROJECT SOFTWARE | LEED tested | A+ | F120 | SEISMIC C2 | CE ETA-23/0419 ETA-23/0420

HIGH-PERFORMANCE EPOXY CHEMICAL ANCHOR

- CE option 1 for cracked and uncracked concrete
- C2 Seismic performance category (M12-M24)
- Certificate for recasting with reinforcement bars (ETA-23/0420)
- Certified fire resistance F120
- Comply with LEED® v4 and v4.1 BETA
- A+ Class: emission of volatile organic compounds (VOC) in living environments
- Ideal for extra-heavy anchor systems and reinforcement rods
- Excellent long-term creep behaviour
- Dry or wet concrete
- Concrete with submerged holes
- Overhead application allowed
- Certified installation also with hollow drill bit
- Maximum tensile strength

USA, Canada and more design values available online.



CODES AND DIMENSIONS

CODE	format		pcs
	[ml]	*[US fl oz]*	
EPO585	585	*19.78*	12

Expiry from date of manufacturing: 24 months.
Storage temperature between +5 and +35° C.

ADDITIONAL PRODUCTS - ACCESSORIES

type	description	format	pcs
MAMDB	double cartridge gun	585 ml	1
STING	nozzle	-	12
STINGRED	nozzle tip reducer	-	1
FILL	filling washer	M8-M24	-
BRUH	steel pipe cleaner	M8-M30	-
BRUHAND	grip and extension for pipe cleaner	-	1
CAT	compressed air tool	-	1
PONY	blow pump	-	1
IR (INTERNAL THREADED ROD)	bushing with internal metric thread	M8-M16	-

INSTALLATION TIME AND TEMPERATURE

support temperature	cartridge temperature	workability time	curing time before loading(*)
0°C ÷ + 4°C	5°C ÷ + 40°C	90 min	144 h
5°C ÷ + 9°C		80 min	48 h
10°C ÷ + 14°C		60 min	28 h
15°C ÷ + 19°C		40 min	18 h
20°C ÷ + 24°C		30 min	12 h
25°C ÷ + 34°C		12 min	9 h
35°C ÷ + 39°C		8 min	6 h
+ 40°C		8 min	4 h

(*)For wet support, the waiting time for load application must be doubled

MOUNTING

Hole execution: three different installation possibilities.

a. INSTALLATION WITH HOLLOW DRILL BIT (HDE)

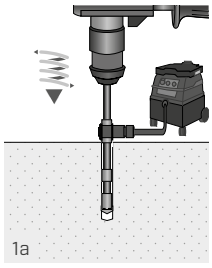

b. ASSEMBLY WITH HAMMER DRILLING HD

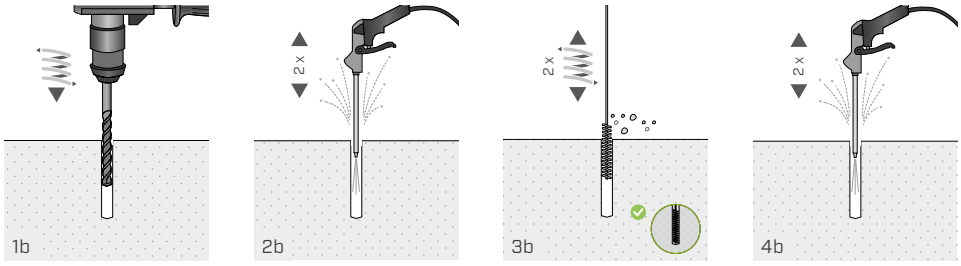

c. ASSEMBLY WITH DIAMOND DRILL BIT

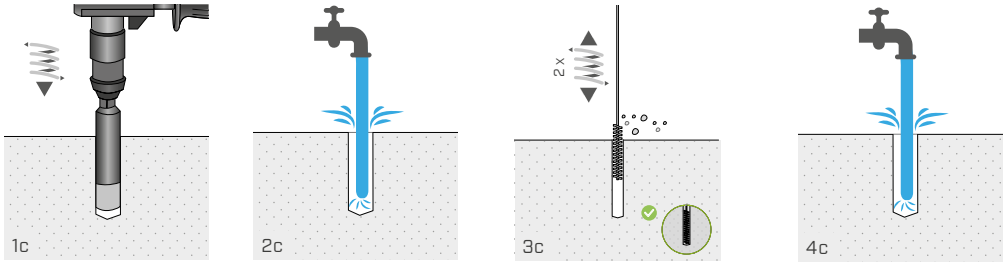

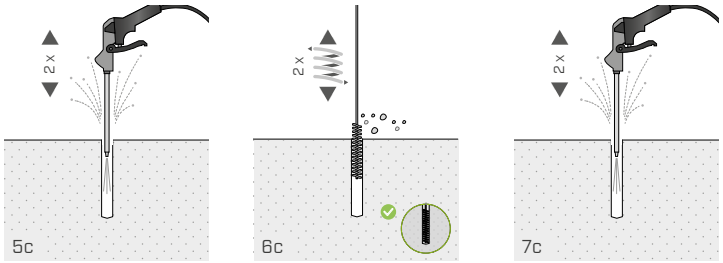

Rod installation:

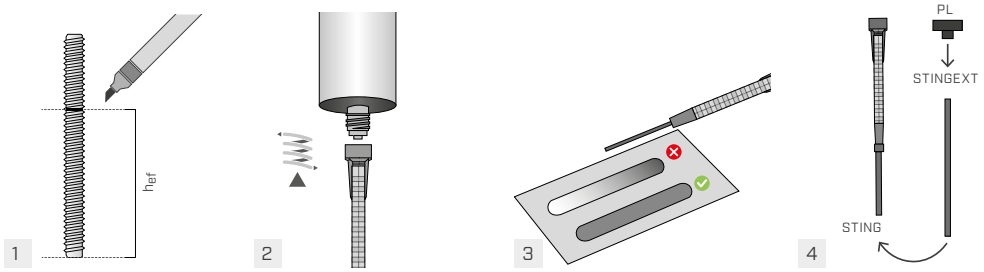

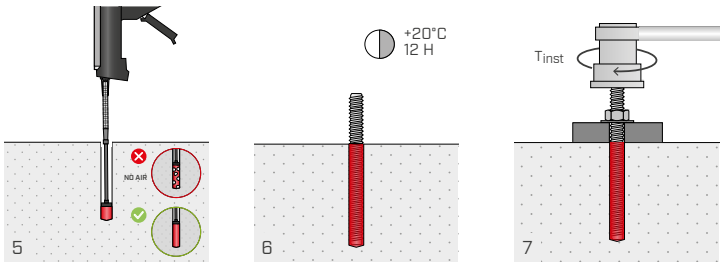

INSTALLATION

INSTALLATION GEOMETRY FEATURES ON CONCRETE

THREADED RODS (INA or MGS TYPE)

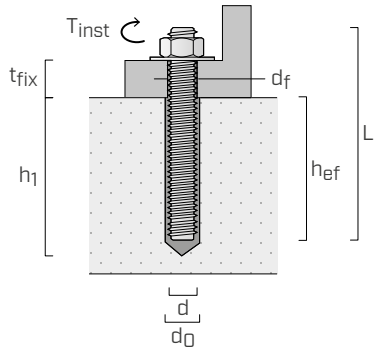

d	anchor diameter
d_0	hole diameter in the concrete support
h_{ef}	effective anchoring depth
d_f	hole diameter in the element to be fastened
T_{inst}	maximum tightening torque
L	anchor length
t_{fix}	maximum fastening thickness
h_1	minimum hole depth



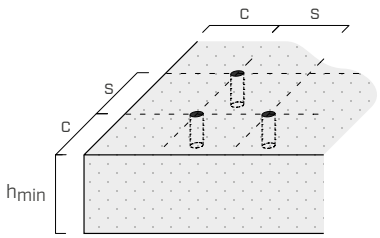

d	[mm]	M8	M10	M12	M16	M20	M24	M27	M30
d_0	[mm]	10	12	14	18	22	28	30	35
$h_{ef,min}$	[mm]	60	60	70	80	90	96	108	120
$h_{ef,max}$	[mm]	160	200	240	320	400	480	540	600
d_f	[mm]	9	12	14	18	22	26	30	33
T_{inst}	[Nm]	10	20	40	60	100	170	250	300

			M8	M10	M12	M16	M20	M24	M27	M30
Minimum spacing	s_{min}	[mm]	40	50	60	75	95	115	125	140
Minimum edge distance	c_{min}	[mm]	35	40	45	50	60	65	75	80
Minimum thickness of concrete support	h_{min}	[mm]	h_{ef} + 30 ≥ 100 mm			h_{ef} + 2 d_0				

BUSHING WITH INTERNAL METRIC THREAD (IR TYPE)

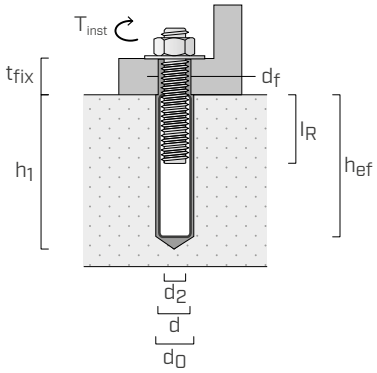

d_2	internal threaded rod diameter
d	diameter of the element anchored on concrete
d_0	hole diameter in the concrete support
h_{ef}	effective anchoring depth
d_f	hole diameter in the element to be fastened
T_{inst}	maximum tightening torque
t_{fix}	maximum fastening thickness
h_1	minimum hole depth
l_R	length of internal threaded rod



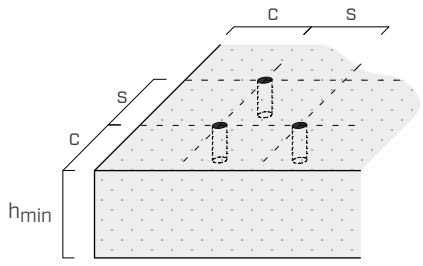

d	[mm]	IR-M6	IR-M8	IR-M10	IR-M12	IR-M16	IR-M20
d_2	[mm]	6	8	10	12	16	20
d	[mm]	10	12	16	20	24	30
d_0	[mm]	12	14	18	22	28	35
$h_{ef,min}$	[mm]	60	70	80	90	96	120
$h_{ef,max}$	[mm]	200	240	320	400	480	600
d_f	[mm]	7	9	12	14	18	22
T_{inst}	[Nm]	20	40	60	100	170	300
$l_{R,min}$	[mm]	6	8	10	12	16	20
$l_{R,max}$	[mm]	10	12	16	20	24	30

			IR-M6	IR-M8	IR-M10	IR-M12	IR-M16	IR-M20
Minimum spacing	s_{min}	[mm]	50	60	75	95	115	140
Minimum edge distance	c_{min}	[mm]	40	45	50	60	65	80
Minimum thickness of concrete support	h_{min}	[mm]	h_{ef} + 30 ≥ 100 mm		h_{ef} + 2 d_0			

STRUCTURAL CHARACTERISTIC VALUES

Valid for a single threaded rod (INA or MGS) when installed in C20/25 grade concrete with a thin reinforcing layer, considering spacing, edge-distance, and base-concrete thickness as non-limiting parameters.

UNCRACKED CONCRETE[5]

TENSION

rod	$h_{ef,standard}$ [mm]	$N_{Rk,c}$ | $N_{Rk,s}$ [kN] 5.8 steel	γ_M	8.8 steel	γ_M	$h_{ef,max}$ [mm]	$N_{Rk,s}$ [kN] 5.8 steel	γ_M	8.8 steel	γ_M
M8	**80**	18,0	$\gamma_{Ms} = 1,5^{(1)}$	29,0	$\gamma_{Ms} = 1,5^{(1)}$	**160**	18,0	$\gamma_{Ms} = 1,5$	29,0	$\gamma_{Ms} = 1,5$
M10	**90**	29,0		42,0		**200**	29,0		46,0	
M12	**110**	42,0		56,8		**240**	42,0		67,0	
M16	**128**	71,2	$\gamma_{Mc} = 1,5^{(2)}$	71,2	$\gamma_{Mc} = 1,5^{(2)}$	**320**	79,0		126,0	
M20	**170**	109,0		109,0		**400**	123,0		196,0	
M24	**210**	149,7		149,7		**480**	177,0		282,0	
M27	**240**	182,9		182,9		**540**	230,0		367,0	
M30	**270**	218,3		218,3		**600**	281,0		449,0	

SHEAR

rod	h_{ef} [mm]	$V_{Rk,s}$[1] [kN] 5.8 steel	γ_{Ms}	8.8 steel	γ_{Ms}
M8	**≥ 60**	11,0	1,25	15,0	1,25
M10	**≥ 60**	17,0		23,0	
M12	**≥ 70**	25,0		34,0	
M16	**≥ 80**	47,0		63,0	
M20	**≥ 120**	74,0		98,0	
M24	**≥ 150**	106,0		141,0	
M27	**≥ 180**	138,0		184,0	
M30	**≥ 200**	168,0		224,0	

CRACKED CONCRETE[5]

TENSION

rod	$h_{ef,standard}$ [mm]	$N_{Rk,p}$ | $N_{Rk,c}$ [kN] 5.8 steel	γ_M	8.8 steel	γ_M	$h_{ef,max}$ [mm]	$N_{Rk,s}$ | $N_{Rk,p}$ [kN] 5.8 steel	γ_M	8.8 steel	γ_M
M8	**80**	14,1	$\gamma_{Mp} = 1,5^{(4)}$	14,1	$\gamma_{Mp} = 1,5^{(4)}$	**160**	18,0	$\gamma_{Ms} = 1,5$	28,2	$\gamma_{Mp} = 1,5^{(4)}$
M10	**90**	19,8		19,8		**200**	29,0		44,0	
M12	**110**	35,3		35,3		**240**	42,0		67,0	$\gamma_{Ms} = 1,5^{(1)}$
M16	**128**	49,9	$\gamma_{Mc} = 1,5^{(2)}$	49,9	$\gamma_{Mc} = 1,5^{(2)}$	**320**	78,0		125,0	
M20	**170**	76,3		76,3		**400**	122,0		196,0	
M24	**210**	104,8		104,8		**480**	176,0		282,0	
M27	**240**	128,0		128,0		**540**	230,0		368,0	
M30	**270**	152,8		152,8		**600**	280,0		449,0	

SHEAR

rod	h_{ef} [mm]	$V_{Rk,s}$[1] [kN] 5.8 steel	γ_{Ms}	8.8 steel	γ_{Ms}
M8	**80**	11,0	1,25	15,0	1,25
M10	**90**	17,0		23,0	
M12	**110**	25,0		34,0	
M16	**128**	47,0		63,0	
M20	**170**	74,0		98,0	
M24	**210**	106,0		141,0	
M27	**240**	138,0		184,0	
M30	**270**	168,0		224,0	

incremental factor for $N_{RK,p}$[3]		
Ψ_c	C25/30	1,02
	C30/37	1,04
	C40/50	1,07
	C50/60	1,10

NOTES

(1) Steel failure mode.

(2) Concrete cone failure method.

(3) Tensile-strength increment factor (excluding steel failure) for both cracked and uncracked concrete.

(4) Pull-out and concrete cone failure.

(5) Refer to the relevant ETA document for use high bond rods.

In the presence of flooded holes, the factors γ_M in the case of both the concrete cone slipping and failure and the concrete cone formation are both equal to 1.8

Component A classification: Skin Irrit. 2; Eye Irrit. 2; Skin Sens. 1; Aquatic Chronic 2.

Component B classification: Acute Tox. 4; Skin Corr. 1A; Eye Dam. 1; Skin Sens. 1

GENERAL PRINCIPLES

- The characteristic values are according to EN 1992-4:2018 with a factor α_{sus}=0.6 and in accordance with ETA-23/0419.
- The design values are obtained from the characteristic values as follows: $R_d = R_k/\gamma_M$. Coefficients γ_M are listed in the table in accordance with the failure characteristics and product certificates.
- For the calculation of anchors with reduced spacing, or too close to the edge, please refer to ETA. Similarly, in case of fastening on concrete-supports with a better-grade, limited thickness or a thick reinforcing layer please see ETA.
- For the design of anchors subjected to seismic loading refer to ETA and to EN 1992-4:2018.
- For specifications of the diameters covered by the various certifications (cracked concrete, uncracked concrete, seismic applications), please refer to ETA.

STRUCTURAL CHARACTERISTIC VALUES

Valid for a single threaded rod (INA or MGS) when installed with IR in C20/25 grade concrete with a thin reinforcing layer, considering spacing, edge-distance, and base-concrete thickness as non-limiting parameters.

UNCRACKED CONCRETE

TENSION

rod	$h_{ef,min}$ [mm]	$N_{Rk,c}$ | $N_{Rk,s}$ [kN]			
		5.8 steel	γ_M	8.8 steel	γ_M
IR-M6	60	10,0	1,5(1)	16,0	1,5(1)
IR-M8	70	17,0		27,0	
IR-M10	80	29,0		35,2	1,5(2)
IR-M12	90	42,0	1,5(2)	42,0	
IR-M16	96	46,3		46,3	
IR-M20	120	64,7		64,7	

SHEAR

rod	$h_{ef,min}$ [mm]	$V_{Rk,s}$(1) [kN]			
		5.8 steel	γ_{Ms}	8.8 steel	γ_{Ms}
IR-M6	60	5,0	1,25	8,0	1,25
IR-M8	70	9,0		14,0	
IR-M10	80	15,0		23,0	
IR-M12	90	21,0		34,0	
IR-M16	96	38,0		60,0	
IR-M20	120	61,0		98,0	

CRACKED CONCRETE

TENSION

rod	$h_{ef,min}$ [mm]	$N_{Rk,s}$ | $N_{Rk,c}$ [kN]		h_{ef} [mm]	$N_{Rk,s}$ [kN]		h_{ef} [mm]	$N_{Rk,s}$ [kN]	
		5.8 steel	γ_M		5.8 steel	γ_M		8.8 steel	γ_M
IR-M6	60	10,0	1,5(1)	≥ 70	10,0	1,5(1)	≥ 70	16,0	1,5(1)
IR-M8	70	17,0		≥ 80	17,0		≥ 90	27,0	
IR-M10	80	24,6	1,5(2)	≥ 100	29,0		≥ 130	46,0	
IR-M12	90	29,4		≥ 120	42,0		≥ 160	67,0	
IR-M16	96	32,4		≥ 180	76,0		≥ 240	121,0	
IR-M20	120	45,3		≥ 240	123,0		≥ 330	196,0	

SHEAR

rod	$h_{ef,min}$ [mm]	$V_{Rk,s}$ | $V_{Rk,cp}$ [kN]			
		5.8 steel	γ_{Ms}	8.8 steel	γ_M
IR-M6	60	5,0	1,25	8,0	1,25(1)
IR-M8	70	9,0		14,0	
IR-M10	80	15,0		23,0	
IR-M12	90	21,0		34,0	
IR-M16	96	38,0		64,8	1,5(5)
IR-M20	120	61,0		90,5	

incremental factor for $N_{RK,p}$(3)		
Ψ_c	C25/30	1,02
	C30/37	1,04
	C40/50	1,07
	C50/60	1,10

NOTES

(1) Steel failure mode.

(2) Concrete cone failure method.

(3) Tensile-strength increment factor (excluding steel failure) for both cracked and uncracked concrete.

(4) Pull-out and concrete cone failure.

(5) Pry-out failure in the concrete.

In the presence of flooded holes, the factors γ_M in the case of both the concrete cone pull-out and failure and concrete cone formation are both equal to 1.8.

Component A classification: Skin Irrit. 2; Eye Irrit. 2; Skin Sens. 1; Aquatic Chronic 2.

Component B classification: Acute Tox. 4; Skin Corr. 1A; Eye Dam. 1; Skin Sens. 1

GENERAL PRINCIPLES

- The values are according to EN 1992-4:2018 with a factor α_{sus}=0.6 and in accordance with ETA-23/0419.
- The design values are obtained from the characteristic values as follows: $R_d = R_k/\gamma_M$. Coefficients γ_M are listed in the table in accordance with the failure characteristics and product certificates.
- For the calculation of anchors with reduced spacing, or too close to the edge, please refer to ETA. Similarly, in case of fastening on concrete-supports with a better-grade, limited thickness or a thick reinforcing layer please see ETA.
- For the design of anchors subjected to seismic loading refer to ETA and to EN 1992-4:2018.
- For specifications of the diameters covered by the various certifications (cracked concrete, uncracked concrete, seismic applications), please refer to ETA.

INA

5.8 AND 8.8 STEEL CLASS THREADED ROD FOR CHEMICAL ANCHORS



- Complete with nut (ISO4032) and washer (ISO7089)
- 5.8 and 8.8 steel with bright zinc plated
- Optimised lengths to maximise rod strength in concrete applications and to avoid waste.

CODES AND DIMENSIONS

5.8 STEEL CLASS THREADED ROD

CODE	d		L_t		d_0		d_f		pcs
	[mm]	*[in]*	[mm]	*[in]*	[mm]	*[in]*	[mm]	*[in]*	
INA588110	**M8**	***0.32***	**110**	***4 3/8***	10	*0.40*	≤ 9	*≤ 0.35*	25
INA5810105	**M10**	***0.40***	**105**	***4 1/8***	12	*0.48*	≤ 12	*≤ 0.47*	25
INA5810140			**140**	***5 1/2***	12	*0.48*	≤ 12	*≤ 0.47*	25
INA5812140	**M12**	***0.48***	**140**	***5 1/2***	14	*0.56*	≤ 14	*≤ 0.55*	25
INA5812195			**195**	***7 11/16***	14	*0.56*	≤ 14	*≤ 0.55*	25
INA5816160	**M16**	***0.63***	**160**	***6 1/4***	18	*0.71*	≤ 18	*≤ 0.71*	15
INA5816195			**195**	***7 11/16***	18	*0.71*	≤ 18	*≤ 0.71*	15
INA5816245			**245**	***9 5/8***	18	*0.71*	≤ 18	*≤ 0.71*	15
INA5820245	**M20**	***0.79***	**245**	***9 5/8***	24	*0.95*	≤ 22	*≤ 0.87*	10
INA5820330			**330**	***13***	24	*0.95*	≤ 22	*≤ 0.87*	10
INA5824330	**M24**	***0.95***	**330**	***13***	28	*1.11*	≤ 26	*≤ 1.02*	5
INA5827330	**M27**	***1.07***	**330**	***13***	32	*1.26*	≤ 30	*≤ 1.18*	5

d_0 = hole diameter in the support / d_f = hole diameter in the element to be fastened

8.8 STEEL CLASS THREADED ROD

CODE	d		L_t		d_0		d_f		pcs
	[mm]	*[in]*	[mm]	*[in]*	[mm]	*[in]*	[mm]	*[in]*	
INA8812140	**M12**	***0.48***	**140**	***5 1/2***	14	*0.56*	≤ 14	*≤ 0.55*	25
INA8812195			**195**	***7 11/16***	14	*0.56*	≤ 14	*≤ 0.55*	25
INA8812245			**245**	***9 5/8***	14	*0.56*	≤ 14	*≤ 0.55*	25
INA8816160	**M16**	***0.63***	**160**	***6 1/4***	18	*0.71*	≤ 18	*≤ 0.71*	15
INA8816195			**195**	***7 11/16***	18	*0.71*	≤ 18	*≤ 0.71*	15
INA8816245			**245**	***9 5/8***	18	*0.71*	≤ 18	*≤ 0.71*	15
INA8816330			**330**	***13***	18	*0.71*	≤ 18	*≤ 0.71*	15
INA8820245	**M20**	***0.79***	**245**	***9 5/8***	24	*0.95*	≤ 22	*≤ 0.87*	10
INA8820330			**330**	***13***	24	*0.95*	≤ 22	*≤ 0.87*	10
INA8820495			**495**	***19 1/2***	24	*0.95*	≤ 22	*≤ 0.87*	10
INA8824330	**M24**	***0.95***	**330**	***13***	28	*1.11*	≤ 26	*≤ 1.02*	5
INA8824495			**495**	***19 1/2***	28	*1.11*	≤ 26	*≤ 1.02*	5
INA8827330	**M27**	***1.07***	**330**	***13***	32	*1.26*	≤ 30	*≤ 1.18*	5
INA8827495			**495**	***19 1/2***	32	*1.26*	≤ 30	*≤ 1.18*	5

d_0 = hole diameter in the support / d_f = hole diameter in the element to be fastened

MOUNTING

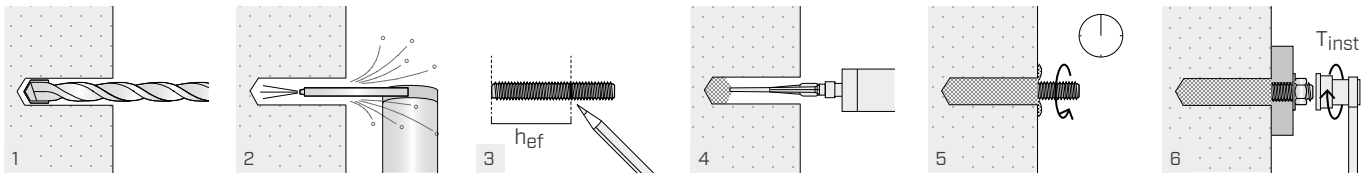

IHP - IHM

BUSHINGS FOR PERFORATED MATERIALS

CODES AND DIMENSIONS

IHP - PLASTIC MESH

CODE	d_0		L		rod		pcs
	[mm]	*[in]*	[mm]	*[in]*	[mm]	*[in]*	
IHP1685	**16**	***0.63***	**85**	***3 3/8***	M10 (M8)	*0.4 (0.32)*	10
IHP16130	**16**	***0.63***	**130**	***5 1/8***	M10 (M8)	*0.4 (0.32)*	10
IHP2085	**20**	***0.79***	**85**	***3 3/8***	M12	*0.48*	10



IHM - METAL NET

CODE	d_0		L		rod		pcs
	[mm]	*[in]*	[mm]	*[in]*	[mm]	*[in]*	
IHM121000	**12**	***0.48***	**1000**	***39 3/8***	M8	*0.32*	50
IHM161000	**16**	***0.63***	**1000**	***39 3/8***	M8/M10	*0.32 (0.4)*	50
IHM221000	**22**	***0.87***	**1000**	***39 3/8***	M12/M16	*0.48 (0.63)*	25



MOUNTING

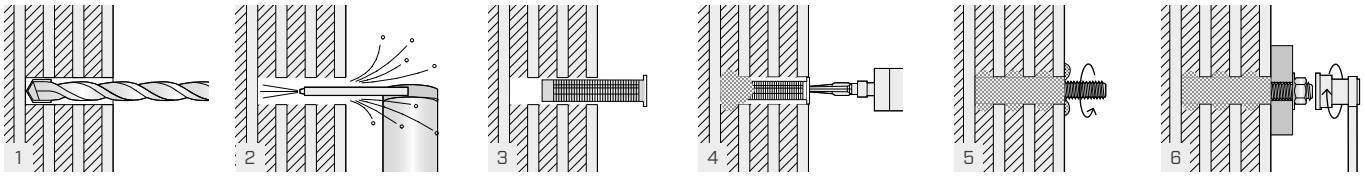

IR

BUSHING WITH INTERNAL METRIC THREAD



- 5.8 grade zinc plated steel
- It makes it possible to reach the maximum tensile performance of the chemical anchor system
- Certified installation with the chemical anchor HYB-FIX and EPO-FIX

CODE	d_2		d		d_0		L		d_f		pcs
	[mm]	*[in]*	[mm]	*[in]*	[mm]	*[in]*	[mm]	*[in]*	[mm]	*[in]*	
IRM880	**M8**	***0.32***	12	*0.48*	14	*0.56*	80	*3 1/8*	≤ 9	*≤ 0.35*	10
IRM1080	**M10**	***0.40***	16	*0.63*	18	*0.71*	80	*3 1/8*	≤ 12	*≤ 0.47*	10
IRM12125	**M12**	***0.48***	20	*0.79*	24	*0.95*	125	*4 15/16*	≤ 14	*≤ 0.55*	10
IRM16170	**M16**	***0.63***	24	*0.95*	28	*1.11*	170	*6 3/4*	≤ 18	*≤ 0.71*	5

d_2 = internal threaded rod diameter
d = diameter of the element anchored on concrete
d_0 = hole diameter in the concrete support
d_f = diameter hole in the element to be fastened

PLU

INJECTION NOZZLE



- For filling the hole without air bubbles
- It is used for overhead applications of the chemical anchor
- EPDM material

CODE	rod		internal thread bushing		d_0		pcs
	[mm]	*[in]*	[mm]	*[in]*	[mm]	*[in]*	
PL14	**M12**	***0.48***	**-**	*-*	14	*0.56*	20
PL18	**M16**	***0.63***	**IR-M10**	***IR-0.4***	18	*0.71*	20
PL24	**M20**	***0.79***	**IR-M12**	***IR-0.48***	24	*0.95*	20
PL28	**M24**	***0.95***	**IR-M16**	***IR-0.63***	28	*1.11*	20
PL32	**M27**	***1.07***	**-**	*-*	32	*1.26*	20
PL35	**M30**	***1.19***	**-**	*-*	35	*1.38*	20

ADDITIONAL PRODUCTS - ACCESSORIES

CODE	description	format	pcs
STINGEXT	extension tube for nozzle	-	1

FILL

FILLING WASHER



- It makes it possible to fill the annular space as a final step to set the anchor system
- It can be used to drill larger holes in the item to be attached
- Increased shear resistance under seismic load

CODE	rod		d_{INT}		d_{EXT}		s		pcs
	[mm]	*[in]*	[mm]	*[in]*	[mm]	*[in]*	[mm]	*[in]*	
FILL8	**M8**	***0.32***	9	*0.35*	23	*0.91*	5	*0.20*	10
FILL10	**M10**	***0.40***	12	*0.47*	26	*1.02*	5	*0.20*	10
FILL12	**M12**	***0.48***	14	*0.55*	28	*1.10*	5	*0.20*	10
FILL16	**M16**	***0.63***	17	*0.67*	34	*1.34*	5	*0.20*	5
FILL20	**M20**	***0.79***	21	*0.83*	41	*1.61*	5	*0.20*	5
FILL24	**M24**	***0.95***	25	*0.98*	48	*1.89*	6	*0.24*	5

ADDITIONAL PRODUCTS - ACCESSORIES



CODE	description	format	pcs
STINGRED	nozzle tip reducer	-	1

BRUH

STEEL PIPE CLEANER



- Stainless steel
- It allows certified installation with PONY blow pump and CAT compressed air tool gun

CODE	rod		internal thread bushing		d_0		L		pcs
	[mm]	*[in]*	[mm]	*[in]*	[mm]	*[in]*	[mm]	*[in]*	
BRUH10	**M8**	***0.32***	**-**	*-*	10	*0.4*	150	*6*	1
BRUH12	**M10**	***0.40***	**-**	*-*	12	*0.48*	150	*6*	1
BRUH14	**M12**	***0.48***	**IR-M8**	***IR-0.32***	14	*0.56*	150	*6*	1
BRUH18	**M16**	***0.63***	**IR-M10**	***IR-0.4***	18	*0.71*	150	*6*	1
BRUH22	**M20**	***0.79***	**IR-M12**	***IR-0.48***	22	*0.87*	150	*6*	1
BRUH28	**M24**	***0.95***	**IR-M16**	***IR-0.63***	28	*1.11*	150	*6*	1
BRUH30	**M27**	***1.07***	**-**	*-*	30	*1.19*	150	*6*	1
BRUH35	**M30**	***1.19***	**-**	*-*	35	*1.38*	150	*6*	1

d_0 = hole diameter in the support

ADDITIONAL PRODUCTS - ACCESSORIES

CODE	description	format	pcs
BRUHAND	grip and extension for pipe cleaner	-	1

DUHXA

HOLLOW DRILL BIT FOR CONCRETE



- It combines two steps in one: Drilling and suction in one work step
- Significantly higher drilling speed due to optimal dust removal
- Dust-free working environment to protect the user
- Universal adapter for vacuum cleaner fits all common industrial vacuum cleaners

CODE	rod		internal thread bushing		d_0		EL		TL		pcs
	[mm]	*[in]*	[mm]	*[in]*	[mm]	*[in]*	[mm]	*[in]*	[mm]	*[in]*	
DUHXA1840	**M16**	***0.63***	**IR-M10**	***IR-0.4***	18	*0.71*	400	*15 3/4*	600	*23 5/8*	1
DUHXA2240	**M20**	***0.79***	**IR-M12**	***IR-0.48***	22	*0.87*	400	*15 3/4*	600	*23 5/8*	1
DUHXA2840	**M24**	***0.95***	**IR-M16**	***IR-0.63***	28	*1.11*	400	*15 3/4*	620	*24 7/16*	1
DUHXA3040	**M27**	***1.07***	**-**	*-*	30	*1.19*	400	*15 3/4*	620	*24 7/16*	1
DUHXA3540	**M30**	***1.19***	**-**	*-*	35	*1.38*	400	*15 3/4*	620	*24 7/16*	1

d_0 = hole diameter in the support
EL = Useful length
TL = Total length

ADDITIONAL PRODUCTS - ACCESSORIES

CODE	description	format	pcs
DUISPS	class M suction system	-	1

CAT

COMPRESSED AIR TOOL



- The installation with CAT makes it possible to reach the maximum certified performances even with cracked concrete

CODE	description	format	pcs
CAT	compressed air tool	-	1

WASHERS, NAILS AND SCREWS FOR PLATES

WASHERS, NAILS AND SCREWS FOR PLATES

WASHERS FOR PLATES

VGU
45° WASHER FOR VGS 569

HUS
TURNED WASHER 569

NAILS AND SCREWS FOR PLATES

LBA
HIGH BOND NAIL 570

LBS
ROUND HEAD SCREW FOR PLATES 571

LBS EVO
ROUND HEAD SCREW FOR PLATES 571

LBS HARDWOOD
ROUND HEAD SCREW FOR PLATES ON HARDWOODS 572

LBS HARDWOOD EVO
ROUND HEAD SCREW FOR PLATES ON HARDWOODS 572

HBS PLATE
PAN HEAD SCREW FOR PLATES 573

HBS PLATE EVO
PAN HEAD SCREW 573

HBS PLATE A4
PAN HEAD SCREW FOR PLATES 574

KKF AISI410
PAN HEAD SCREW 574

VGS
FULLY THREADED SCREW WITH COUNTERSUNK OR HEXAGONAL HEAD 575

VGS EVO
FULLY THREADED SCREW WITH COUNTERSUNK OR HEXAGONAL HEAD 576

VGS EVO C5
FULL THREAD CONNECTOR WITH COUNTERSUNK HEAD 576

VGS A4
FULL THREAD CONNECTOR WITH COUNTERSUNK HEAD 577

HBS COIL
HBS BOUND SCREWS 577

LEGEND

d_1	[mm]	nominal diameter
L	[mm]	length
b	[mm]	thread length
A	[mm]	fastening thickness (timber)
A_p	[mm]	fastening thickness (plate)



Where some yield, others resist

Durable connectors, suitable for different materials and all kinds of environments, even the most aggressive. Playing a game like this has endless moves and **new solutions** that we are ready to give you.



Set the rules of construction with us, browse the online catalogue:

rothoblaas.com

rothoblaas

Solutions for Building Technology

VGU

45° WASHER FOR VGS



VGU



VGU EVO

ETA-11/0030 | AC233 ESR-4645 | UKTA-0836 22/6195

VIDEO | MANUALS

	VGU	VGU EVO
SERVICE CLASS	SC2	SC3
ATMOSPHERIC CORROSIVITY	C2	C4
WOOD CORROSIVITY	T2	T3
MATERIAL	Zn ELECTRO PLATED	C4 EVO COATING

CODES AND DIMENSIONS

VGU WASHER

Zn ELECTRO PLATED

CODE	screw [mm]	$d_{V,S}$ [mm]	pcs
VGU945	VGS Ø9	5	25
VGU1145	VGS Ø11	6	25
VGU1345	VGS Ø13	8	25

$d_{V,S}$ = pre-drilling hole diameter (softwood)

VGU EVO WASHER

C4 EVO COATING

CODE	screw [mm]	$d_{V,S}$ [mm]	pcs
VGUEVO945	VGSEVO Ø9	5	25
VGUEVO1145	VGSEVO Ø11	6	25
VGUEVO1345	VGSEVO Ø13	8	25

$d_{V,S}$ = pre-drilling hole diameter (softwood)

JIG VGU TEMPLATE

CODE	washer [mm]	d_h [mm]	d_V [mm]	pcs
JIGVGU945	VGU945	5,5	5	1
JIGVGU1145	VGU1145	6,5	6	1
JIGVGU1345	VGU1345	8,5	8	1



HSS WOOD DRILL BIT

CODE	d_V [mm]	TL [mm]	SL [mm]	pcs
F1599105	5	150	100	1
F1599106	6	150	100	1
F1599108	8	150	100	1

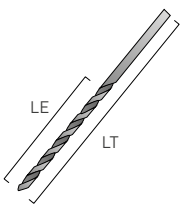

HUS

TURNED WASHER



HUS | HUS A4 | HUS EVO | HUS 15°

ETA-11/0030 | AC233 ESR-4645 | AC233 | AC257 ESR-4645 | UKTA-0836 22/6195

MY PROJECT SOFTWARE

	HUS	HUS EVO	HUS A4	HUS 15°
SERVICE CLASS	SC2	SC3	SC4	SC3
ATMOSPHERIC CORROSIVITY	C2	C4	C5	C2
WOOD CORROSIVITY	T2	T3	T5	T3
MATERIAL	Zn ELECTRO PLATED	C4 EVO COATING	A4 AISI 316	alu

CODES AND DIMENSIONS

HUS - turned washer

Zn ELECTRO PLATED

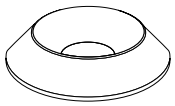

CODE	d_{HBS} [mm]	d_{VGS} [mm]	pcs
HUS6	6	-	100
HUS8	8	9	50
HUS10	10	11	50
HUS12	12	13	25

HUS EVO - turned washer

C4 EVO COATING

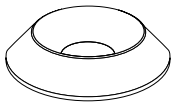

CODE	$d_{HBS\ EVO}$ [mm]	$d_{VGS\ EVO}$ [mm]	pcs
HUSEVO6	6	-	100
HUSEVO8	8	9	50

HUS A4 - turned washer

A4 AISI 316

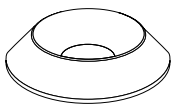

CODE	d_{SCI} [mm]	$d_{VGS\ A4}$ [mm]	pcs
HUS6A4	6	-	100
HUS8A4	8	9	100
HUS10A4	-	11	50

HUS 15° - 15° angled washer

alu

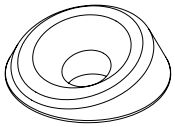

CODE	d_{HBS} [mm]	d_{VGS} [mm]	pcs
HUS815	8	9	50

HUS BAND - double-sided adhesive for HUS washers

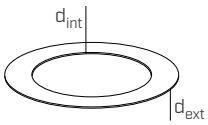

CODE	d_{int} [mm]	d_{ext} [mm]	pcs
HUSBAND	22	30	50

Compatible with HUS815, HUS10, HUS12, HUS10A4.

LBA

HIGH BOND NAIL



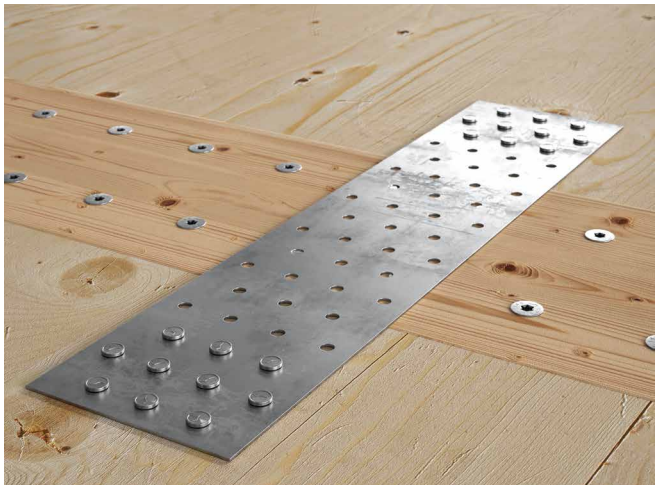

CE
ETA-22/0002

MY PROJECT SOFTWARE

SERVICE CLASS	SC2
ATMOSPHERIC CORROSIVITY	C2
WOOD CORROSIVITY	T2
MATERIAL	Zn ELECTRO PLATED — electrogalvanized carbon steel

SERVICE CLASS	SC4
ATMOSPHERIC CORROSIVITY	C5
WOOD CORROSIVITY	T5
MATERIAL	A4 AISI 316 — A4 | AISI316 austenitic stainless steel (CRC III)

CODES AND DIMENSIONS

LBA - loose nails — Zn ELECTRO PLATED

d_1 [mm]	CODE	L [mm]	b [mm]	pcs
4	LBA440	40	30	250
	LBA450	50	40	250
	LBA460	60	50	250
	LBA475	75	65	250
	LBA4100	100	85	250
6	LBA660	60	50	250
	LBA680	80	70	250
	LBA6100	100	85	250

LBAI A4 | AISI316 - loose nails — A4 AISI 316

d_1 [mm]	CODE	L [mm]	b [mm]	pcs
4	LBAI450	50	40	250

LBA 25 PLA - plastic stick binding 25° — Zn ELECTRO PLATED



d_1 [mm]	CODE	L [mm]	b [mm]	pcs
4	LBA25PLA440	40	30	2000
	LBA25PLA450	50	40	2000
	LBA25PLA460	60	50	2000

Compatible with Anker 25° nailgun HH3522.

LBA 34 PLA - plastic stick binding 34° — Zn ELECTRO PLATED



d_1 [mm]	CODE	L [mm]	b [mm]	pcs
4	LBA34PLA440	40	30	2000
	LBA34PLA450	50	40	2000
	LBA34PLA460	60	50	2000

Compatible with 34° strip magazine nailgun ATEU0116 and gas nailgun HH12100700.

LBA COIL - 15° plastic roll binding — Zn ELECTRO PLATED

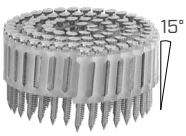

d_1 [mm]	CODE	L [mm]	b [mm]	pcs
4	LBACOIL440	40	30	1600
	LBACOIL450	50	40	1600
	LBACOIL460	60	50	1600

Compatible with nailgun TJ100091.

RELATED PRODUCTS


HH3731


HH3522


ATEU0116

CODE	description	pcs
HH3731	palm nailer	1
HH3522	Anker 25° nailgun	1
ATEU0116	strip magazine nailgun 34°	1

For more information see the "TOOLS FOR TIMBER CONSTRUCTION" catalogue at www.rothoblaas.com

NOTE: LBA, LBA 25 PLA, LBA 34 PLA and LBA COIL available in hot-dip galvanised version on request.

LBS

ROUND HEAD SCREW FOR PLATES

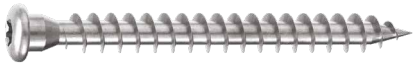

ETA-11/0030 | AC233 ESR-4645 | UKTA-0836 22/6195

MY PROJECT SOFTWARE

BIT INCLUDED

SERVICE CLASS	SC1 SC2
ATMOSPHERIC CORROSIVITY	C1 C2
WOOD CORROSIVITY	T1 T2
MATERIAL	Zn ELECTRO PLATED — electrogalvanized carbon steel

CODES AND DIMENSIONS

d_1 [mm]	CODE	L [mm]	b [mm]	pcs
5 TX 20	LBS525	25	21	500
	LBS540	40	36	500
	LBS550	50	46	200
	LBS560	60	56	200
	LBS570	70	66	200
7 TX 30	LBS760	60	55	100
	LBS780	80	75	100
	LBS7100	100	95	100

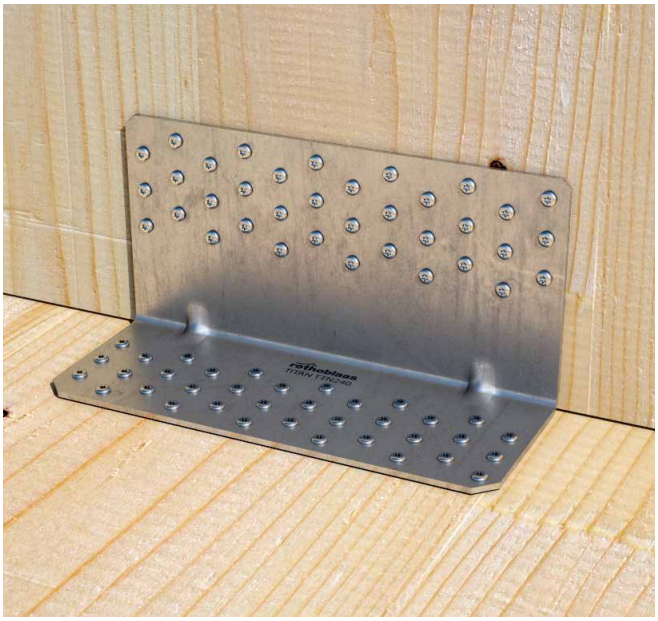

LBS EVO

ROUND HEAD SCREW FOR PLATES

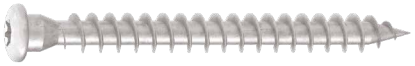

ETA-11/0030 | AC233 | AC257 ESR-4645

BIT INCLUDED

SERVICE CLASS	SC1 SC2 SC3
ATMOSPHERIC CORROSIVITY	C1 C2 C3 C4
WOOD CORROSIVITY	T1 T2 T3
MATERIAL	C4 EVO COATING — carbon steel with C4 EVO coating

CODES AND DIMENSIONS

d_1 [mm]	CODE	L [mm]	b [mm]	pcs
5 TX 20	LBSEVO540	40	36	500
	LBSEVO550	50	46	200
	LBSEVO560	60	56	200
	LBSEVO570	70	66	200
7 TX 30	LBSEVO780	80	75	100
	LBSEVO7100	100	95	100



LBS HARDWOOD

ROUND HEAD SCREW FOR PLATES ON HARDWOODS

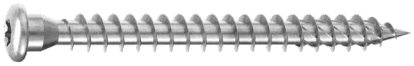

ETA-11/0030

UKTA-0836
22/6195

MY PROJECT SOFTWARE

BIT INCLUDED

SERVICE CLASS	SC1 SC2
ATMOSPHERIC CORROSIVITY	C1 C2
WOOD CORROSIVITY	T1 T2
MATERIAL	Zn ELECTRO PLATED — electrogalvanized carbon steel

CODES AND DIMENSIONS

d_1 [mm]	CODE	L [mm]	b [mm]	pcs
5 TX 20	LBSH540	40	36	500
	LBSH550	50	46	200
	LBSH560	60	56	200
	LBSH570	70	66	200



LBS HARDWOOD EVO

ROUND HEAD SCREW FOR PLATES ON HARDWOODS



ETA-11/0030

BIT INCLUDED

SERVICE CLASS	SC1 SC2 SC3
ATMOSPHERIC CORROSIVITY	C1 C2 C3 C4
WOOD CORROSIVITY	T1 T2 T3
MATERIAL	C4 EVO COATING — carbon steel with C4 EVO coating

CODES AND DIMENSIONS

d_1 [mm]	CODE	L [mm]	b [mm]	pcs
5 TX 20	LBSHEVO580	80	76	200
	LBSHEVO5100	100	96	200
	LBSHEVO5120	120	116	200
7 TX 30	LBSHEVO760	60	55	100
	LBSHEVO780	80	75	100
	LBSHEVO7100	100	95	100
	LBSHEVO7120	120	115	100
	LBSHEVO7160	160	155	100
	LBSHEVO7200	200	195	100

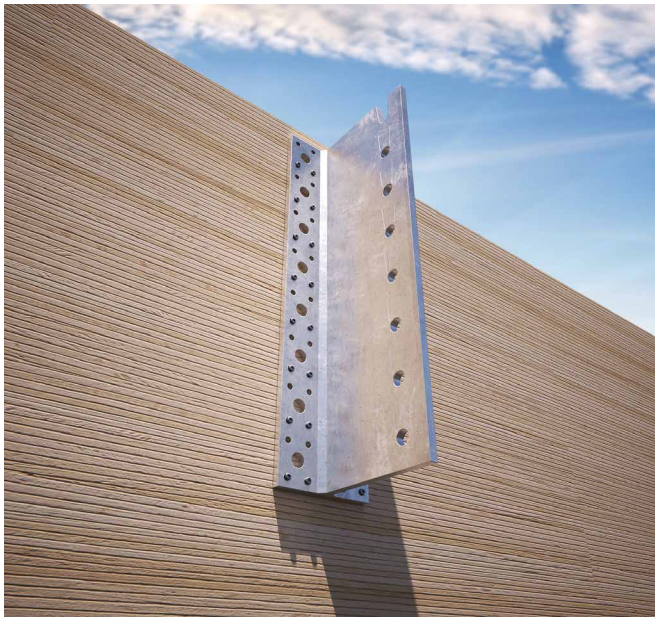

HBS PLATE

PAN HEAD SCREW FOR PLATES



ETA-11/0030 | AC233 ESR-4645

SOFTWARE | MANUALS | BIT INCLUDED

SERVICE CLASS	SC1	SC2	
ATMOSPHERIC CORROSIVITY	C1	C2	
WOOD CORROSIVITY	T1	T2	
MATERIAL	Zn ELECTRO PLATED	electrogalvanized carbon steel	

CODES AND DIMENSIONS

HBS PLATE

d_1 [mm]	CODE	L [mm]	b [mm]	A_P [mm]	pcs
8 TX 40	HBSPL860	60	52	1÷10	100
	HBSPL880	80	55	1÷15	100
	HBSPL8100	100	75	1÷15	100
	HBSPL8120	120	95	1÷15	100
	HBSPL8140	140	110	1÷20	100
	HBSPL8160	160	130	1÷20	100
10 TX 40	HBSPL1080	80	60	1÷10	50
	HBSPL10100	100	75	1÷15	50
	HBSPL10120	120	95	1÷15	50
	HBSPL10140	140	110	1÷20	50
	HBSPL10160	160	130	1÷20	50
	HBSPL10180	180	150	1÷20	50
12 TX 50	HBSPL12100	100	75	1÷15	25
	HBSPL12120	120	90	1÷20	25
	HBSPL12140	140	110	1÷20	25
	HBSPL12160	160	120	1÷30	25
	HBSPL12180	180	140	1÷30	25
	HBSPL12200	200	160	1÷30	25

METAL-to-TIMBER recommended use:



HBS PLATE EVO

PAN HEAD SCREW



ETA-11/0030 | AC233 | AC257 ESR-4645

SOFTWARE | MANUALS | BIT INCLUDED

SERVICE CLASS	SC1	SC2	SC3	
ATMOSPHERIC CORROSIVITY	C1	C2	C3	C4
WOOD CORROSIVITY	T1	T2	T3	
MATERIAL	C4 EVO COATING	carbon steel with C4 EVO coating		

CODES AND DIMENSIONS

HBS P EVO



d_1 [mm]	CODE	L [mm]	b [mm]	A [mm]	A_P [mm]	pcs
5 TX 25	HBSPEVO550	50	30	20	1÷10	200
	HBSPEVO560	60	35	25	1÷10	200
	HBSPEVO570	70	40	30	1÷10	100
	HBSPEVO580	80	50	30	1÷10	100
6 TX 30	HBSPEVO680	80	50	30	1÷10	100
	HBSPEVO690	90	55	35	1÷10	100

HBS PLATE EVO

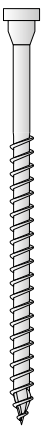

d_1 [mm]	CODE	L [mm]	b [mm]	A [mm]	A_P [mm]	pcs
8 TX 40	HBSPLEVO840	40	32	8	1÷10	100
	HBSPLEVO860	60	52	8	1÷10	100
	HBSPLEVO880	80	55	25	1÷15	100
	HBSPLEVO8100	100	75	25	1÷15	100
	HBSPLEVO8120	120	95	25	1÷15	100
	HBSPLEVO8140	140	110	30	1÷20	100
	HBSPLEVO8160	160	130	30	1÷20	100
10 TX 40	HBSPLEVO1060	60	52	8	1÷10	50
	HBSPLEVO1080	80	60	20	1÷10	50
	HBSPLEVO10100	100	75	25	1÷15	50
	HBSPLEVO10120	120	95	25	1÷15	50
	HBSPLEVO10140	140	110	30	1÷20	50
	HBSPLEVO10160	160	130	30	1÷20	50
	HBSPLEVO10180	180	150	30	1÷20	50
12 TX 50	HBSPLEVO12120	120	90	30	1÷20	25
	HBSPLEVO12140	140	110	30	1÷20	25
	HBSPLEVO12160	160	120	40	1÷30	25
	HBSPLEVO12180	180	140	40	1÷30	25
	HBSPLEVO12200	200	160	40	1÷30	25

HBS PLATE A4

PAN HEAD SCREW FOR PLATES



ETA-11/0030 | ICC ES AC233 ESR-4645

SOFTWARE | MANUALS | BIT INCLUDED

SERVICE CLASS	SC1	SC2	SC3	SC4	
ATMOSPHERIC CORROSIVITY	C1	C2	C3	C4	C5
WOOD CORROSIVITY	T1	T2	T3	T4	T5

MATERIAL: A4 AISI 316 — A4 | AISI316 austenitic stainless steel (CRC III)

CODES AND DIMENSIONS

d_1 [mm]	CODE	L [mm]	b [mm]	A_P [mm]	pcs
8 TX 40	HBSPL860A4	60	52	1÷10	100
	HBSPL880A4	80	55	1÷15	100
	HBSPL8100A4	100	75	1÷15	100
	HBSPL8120A4	120	95	1÷15	100
	HBSPL8140A4	140	110	1÷20	100
	HBSPL8160A4	160	130	1÷20	100
10 TX 40	HBSPL1080A4	80	60	1÷10	50
	HBSPL10100A4	100	75	1÷15	50
	HBSPL10120A4	120	95	1÷15	50
	HBSPL10140A4	140	110	1÷20	50
	HBSPL10160A4	160	130	1÷20	50
	HBSPL10180A4	180	150	1÷20	50
12 TX 50	HBSPL12100A4	100	75	1÷15	25
	HBSPL12120A4	120	90	1÷20	25
	HBSPL12140A4	140	110	1÷20	25
	HBSPL12160A4	160	120	1÷30	25
	HBSPL12180A4	180	140	1÷30	25
	HBSPL12200A4	200	160	1÷30	25

KKF AISI410

PAN HEAD SCREW



ETA-11/0030 | ICC ES AC233 ESR-4645 | UKCA UKTA-0836 22/6195

BIT INCLUDED

SERVICE CLASS	SC1	SC2	SC3	
ATMOSPHERIC CORROSIVITY	C1	C2		
WOOD CORROSIVITY	T1	T2	T3	T4

MATERIAL: 410 AISI — AISI410 martensitic stainless steel

CODES AND DIMENSIONS

d_1 [mm]	CODE	L [mm]	b [mm]	A [mm]	pcs
4 TX 20	KKF430	30	18	12	500
	KKF435	35	20	15	500
	KKF440	40	24	16	500
	KKF445	45	30	15	200
	KKF450	50	30	20	200
4,5 TX 20	KKF4520(*)	20	15	5	200
	KKF4540	40	24	16	200
	KKF4545	45	30	15	200
	KKF4550	50	30	20	200
	KKF4560	60	35	25	200
	KKF4570	70	40	30	200
5 TX 25	KKF540	40	24	16	200
	KKF550	50	30	20	200
	KKF560	60	35	25	200
	KKF570	70	40	30	100
	KKF580	80	50	30	100
	KKF590	90	55	35	100
	KKF5100	100	60	40	100
6 TX 30	KKF680	80	50	30	100
	KKF6100	100	60	40	100
	KKF6120	120	75	45	100

(*) Not holding CE marking.

VGS

FULLY THREADED SCREW WITH COUNTERSUNK OR HEXAGONAL HEAD

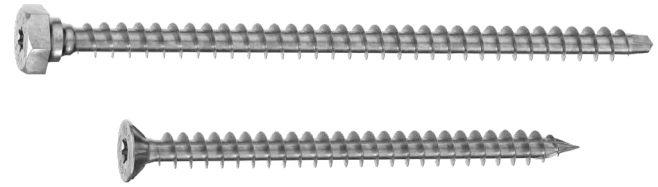

ETA-11/0030 | ICC ES AC233 ESR-4645 | UKCA UKTA-0836 22/6195

MY PROJECT SOFTWARE | MANUALS | BIT INCLUDED

SERVICE CLASS	SC1 SC2
ATMOSPHERIC CORROSIVITY	C1 C2
WOOD CORROSIVITY	T1 T2
MATERIAL	Zn ELECTRO PLATED electrogalvanized carbon steel

CODES AND DIMENSIONS

d_1 [mm]	CODE	L [mm]	b [mm]	pcs	
9 TX40	VGS9100	100	90	25	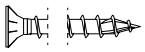
	VGS9120	120	110	25	
	VGS9140	140	130	25	
	VGS9160	160	150	25	
	VGS9180	180	170	25	
	VGS9200	200	190	25	
	VGS9220	220	210	25	
	VGS9240	240	230	25	
	VGS9260	260	250	25	
	VGS9280	280	270	25	
	VGS9300	300	290	25	
	VGS9320	320	310	25	
	VGS9340	340	330	25	
	VGS9360	360	350	25	
	VGS9380	380	370	25	
	VGS9400	400	390	25	
	VGS9440	440	430	25	
	VGS9480	480	470	25	
	VGS9520	520	510	25	
	VGS9560	560	550	25	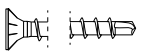
	VGS9600	600	590	25	
11 TX 50	VGS1180	80	70	25	
	VGS11100	100	90	25	
	VGS11125	125	115	25	
	VGS11150	150	140	25	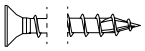
	VGS11175	175	165	25	
	VGS11200	200	190	25	
	VGS11225	225	215	25	
	VGS11250	250	240	25	
11 TX 50	VGS11275	275	265	25	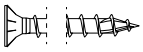
	VGS11300	300	290	25	
	VGS11325	325	315	25	
	VGS11350	350	340	25	
	VGS11375	375	365	25	
	VGS11400	400	390	25	
	VGS11425	425	415	25	
	VGS11450	450	440	25	
	VGS11475	475	465	25	
	VGS11500	500	490	25	
	VGS11525	525	515	25	
	VGS11550	550	540	25	
	VGS11575	575	565	25	
	VGS11600	600	590	25	
11 SW 17 TX 50	VGS11650	650	630	25	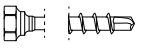
	VGS11700	700	680	25	
	VGS11750	750	680	25	
	VGS11800	800	780	25	
	VGS11850	850	830	25	
	VGS11900	900	880	25	
	VGS11950	950	930	25	
	VGS111000	1000	980	25	
13 TX 50	VGS1380	80	70	25	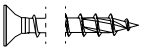
	VGS13100	100	90	25	
	VGS13150	150	140	25	
	VGS13200	200	190	25	
	VGS13250	250	240	25	
	VGS13300	300	280	25	
	VGS13350	350	330	25	
	VGS13400	400	380	25	
	VGS13450	450	430	25	
	VGS13500	500	480	25	
	VGS13550	550	530	25	
	VGS13600	600	580	25	
13 SW 19 TX 50	VGS13650	650	630	25	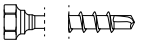
	VGS13700	700	680	25	
	VGS13750	750	730	25	
	VGS13800	800	780	25	
	VGS13850	850	830	25	
	VGS13900	900	880	25	
	VGS13950	950	930	25	
	VGS131000	1000	980	25	
	VGS131100	1100	1080	25	
	VGS131200	1200	1180	25	
	VGS131300	1300	1280	25	
	VGS131400	1400	1380	25	
	VGS131500	1500	1480	25	
15 SW 22 TX 50	VGS15600	600	580	25	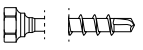
	VGS15700	700	680	25	
	VGS15800	800	780	25	
	VGS15900	900	880	25	
	VGS151000	1000	980	25	
	VGS151200	1200	1180	25	
	VGS151400	1400	1380	25	
	VGS151600	1600	1580	25	
	VGS151800	1800	1780	25	
	VGS152000	2000	1980	25	

VGS EVO

FULLY THREADED SCREW WITH COUNTERSUNK OR HEXAGONAL HEAD

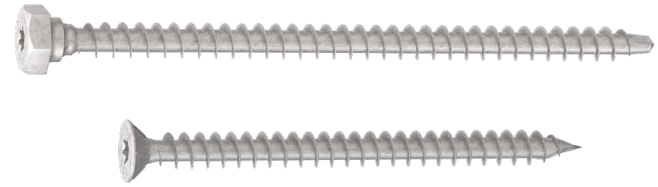

ETA-11/0030 | ICC-ES AC233 \| AC257 ESR-4645 | UKCA UKTA-0836 22/6195

MY PROJECT SOFTWARE | VIDEO | MANUALS | BIT INCLUDED

SERVICE CLASS	SC1 SC2 SC3
ATMOSPHERIC CORROSIVITY	C1 C2 C3 C4
WOOD CORROSIVITY	T1 T2 T3
MATERIAL	C4 EVO COATING — carbon steel with C4 EVO coating

CODES AND DIMENSIONS

d_1 [mm]	CODE	L [mm]	b [mm]	pcs	
9 TX 40	VGSEVO9120	120	110	25	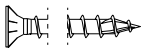
	VGSEVO9160	160	150	25	
	VGSEVO9200	200	190	25	
	VGSEVO9240	240	230	25	
	VGSEVO9280	280	270	25	
	VGSEVO9320	320	310	25	
	VGSEVO9360	360	350	25	
11 TX 50	VGSEVO11100	100	90	25	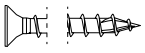
	VGSEVO11150	150	140	25	
	VGSEVO11200	200	190	25	
	VGSEVO11250	250	240	25	
	VGSEVO11300	300	290	25	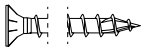
	VGSEVO11350	350	340	25	
	VGSEVO11400	400	390	25	
	VGSEVO11500	500	490	25	
	VGSEVO11600	600	590	25	
13 TX 50	VGSEVO13200	200	190	25	
	VGSEVO13300	300	280	25	
	VGSEVO13400	400	380	25	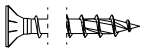
	VGSEVO13500	500	480	25	
	VGSEVO13600	600	580	25	
13 SW 19 TX 50	VGSEVO13700	700	680	25	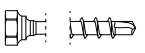
	VGSEVO13800	800	780	25	

VGS EVO C5

FULL THREAD CONNECTOR WITH COUNTERSUNK HEAD



ETA-11/0030 | ICC-ES AC233 ESR-4645

MY PROJECT SOFTWARE | MANUALS | BIT INCLUDED

SERVICE CLASS	SC1 SC2 SC3
ATMOSPHERIC CORROSIVITY	C1 C2 C3 C4 C5
WOOD CORROSIVITY	T1 T2 T3 T4
MATERIAL	C5 EVO COATING — carbon steel with C5 EVO coating with very high corrosion resistance

CODES AND DIMENSIONS

d_1 [mm]	CODE	L [mm]	b [mm]	pcs	
9 TX 40	VGSEVO9200C5	200	190	25	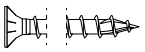
	VGSEVO9240C5	240	230	25	
	VGSEVO9280C5	280	270	25	
	VGSEVO9320C5	320	310	25	
	VGSEVO9360C5	360	350	25	

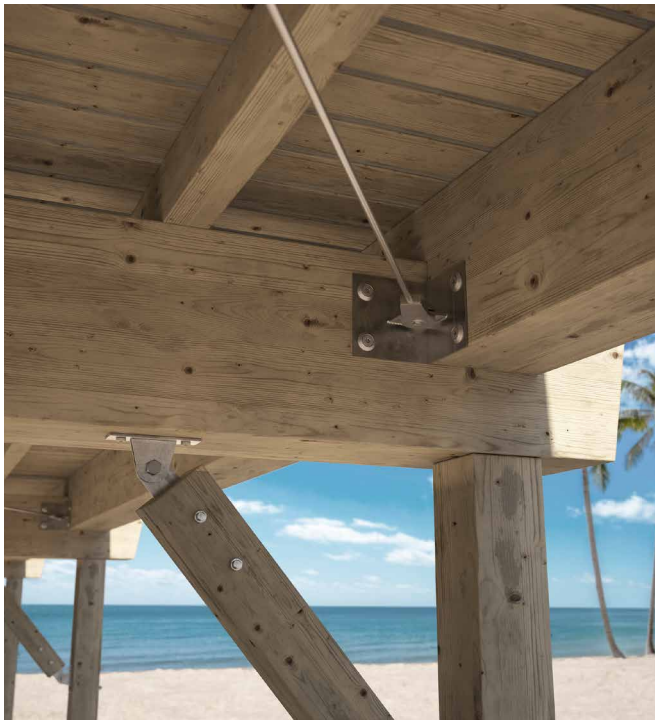

VGS A4

FULL THREAD CONNECTOR WITH COUNTERSUNK HEAD

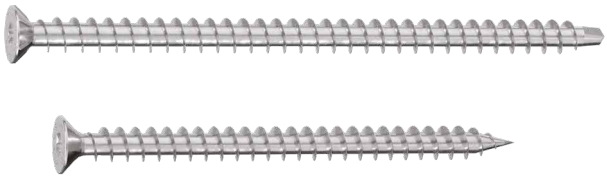

ETA-11/0030 | ICC ES AC233 ESR-4645

MY PROJECT SOFTWARE | MANUALS | BIT INCLUDED

SERVICE CLASS	SC1 SC2 SC3 SC4
ATMOSPHERIC CORROSIVITY	C1 C2 C3 C4 C5
WOOD CORROSIVITY	T1 T2 T3 T4 T5
MATERIAL	A4 AISI 316 — A4 | AISI316 austenitic stainless steel (CRC III)

CODES AND DIMENSIONS

d_1 [mm]	CODE	L [mm]	b [mm]	pcs	
9 TX 40	VGS9120A4	120	110	25	
	VGS9160A4	160	150	25	
	VGS9200A4	200	190	25	
	VGS9240A4	240	230	25	
	VGS9280A4	280	270	25	
	VGS9320A4	320	310	25	
	VGS9360A4	360	350	25	
11 TX 50	VGS11100A4	100	90	25	
	VGS11150A4	150	140	25	
	VGS11200A4	200	190	25	
	VGS11250A4	250	240	25	
	VGS11300A4	300	290	25	
	VGS11350A4	350	340	25	
	VGS11400A4	400	390	25	
	VGS11500A4	500	490	25	
	VGS11600A4	600	590	25	

HBS COIL

HBS BOUND SCREWS

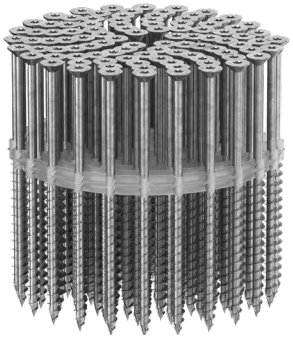

ETA-11/0030 | UKTA-0836 22/6195

MY PROJECT SOFTWARE | VIDEO | BIT INCLUDED

SERVICE CLASS	SC1 SC2
ATMOSPHERIC CORROSIVITY	C1 C2
WOOD CORROSIVITY	T1 T2
MATERIAL	Zn ELECTRO PLATED — electrogalvanized carbon steel

CODES AND DIMENSIONS

d_1 [mm]	CODE	L [mm]	b [mm]	A [mm]	pcs/	pcs
4 TX 20	HH10600459(*)	25	18	7	-	3000
	HZB430	30	16	14	167	3000
	HZB440	40	24	16	167	2000
	HZB450	50	30	20	125	1500
4,5 TX 20	HZB4550	50	30	20	125	1500
5 TX 25	HZB560	60	30	30	125	1250
	HZB570	70	35	35	125	625
	HZB580	80	40	40	125	625
6 TX 30	HZB670	70	40	30	135	625
	HZB680	80	40	40	135	625

(*) Full threaded screw.

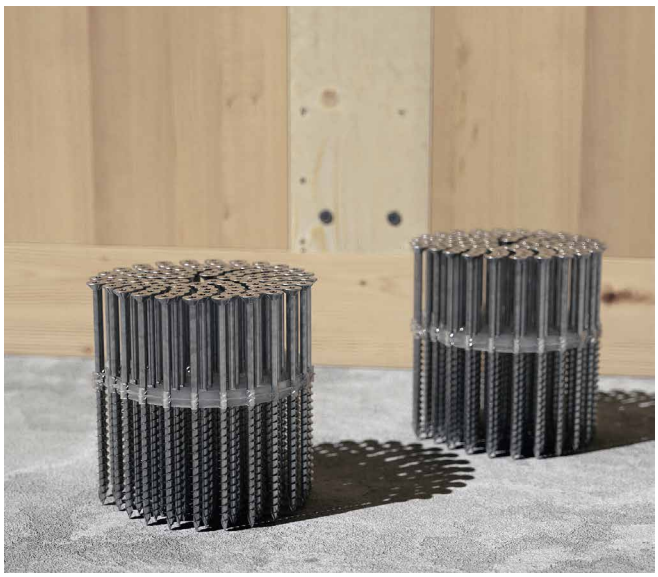

Rotho Blaas Srl does not guarantee the legal and/or design conformity of data and calculations, as Rotho Blaas provides indicative tools such as technical-commercial service within the sales activity.

Rotho Blaas Srl follows a policy of continuous development of its products, thereby reserving the right to modify their characteristics, technical specifications and other documentation without notice.

The user or the designer are responsible to verify, at each use, the conformity of the data to the regulations in force and to the project. The ultimate responsibility for choosing the appropriate product for a specific application lies with the user/designer.

The values resulting from "experimental investigations" are based on the actual test results and valid only for the test conditions specified.

Rotho Blaas Srl does not guarantee and in no case can be held responsible for damages, losses and costs or other consequences, for any reason (warranty for defects, warranty for malfunction, product or legal responsibility, etc.) deriving from the use or inability to use the products for any purpose; from non-conforming use of the product; Rotho Blaas Srl is not liable in any way for any errors in printing and/or typing. In the event of differences between the contents of the catalogue versions in the various languages, the Italian text is binding and takes precedence with respect to the translations. The latest version of the data sheets available can be found on the Rotho Blaas website.

Pictures are partially completed with accessories not included. Images are for illustration purposes only. The use of third party logos and trademarks in this catalogue is subject to the terms and conditions set out in the general conditions of purchase, unless otherwise agreed with the supplier. Packaged quantities may vary.

This catalogue is private property of Rotho Blaas Srl and may not be copied, reproduced or published, totally or in part, without prior written consent. All violations will be prosecuted according to law.

The general purchase and sale conditions of Rotho Blaas Srl are available on the website www.rothoblaas.com

All rights reserved.
Copyright © 2023 by Rotho Blaas Srl
All renderings © Rotho Blaas Srl

rothoblaas | Solutions for Building Technology

- FASTENING
- AIRTIGHTNESS AND WATERPROOFING
- SOUNDPROOFING
- FALL PROTECTION
- TOOLS AND MACHINES

Rothoblaas is the multinational Italian company that has made innovative technology its mission, making its way to the forefront for timber buildings and construction safety in just a few years. Thanks to its comprehensive product range and the technically-prepared and widespread sales network, the company promotes the transfer of its know-how to the customers and aims to be a prominent and reliable partner for developing and innovating products and building methods. All of this contributes to a new culture of sustainable construction, focused on increasing comfortable living and reducing CO_2 emissions.

Rotho Blaas Srl

Via dell'Adige N.2/1 | 39040, Cortaccia (BZ) | Italia
Tel: +39 0471 81 84 00 | Fax: +39 0471 81 84 84
info@rothoblaas.com | www.rothoblaas.com

01PLATES2EN 04|24
8 054045 430584

